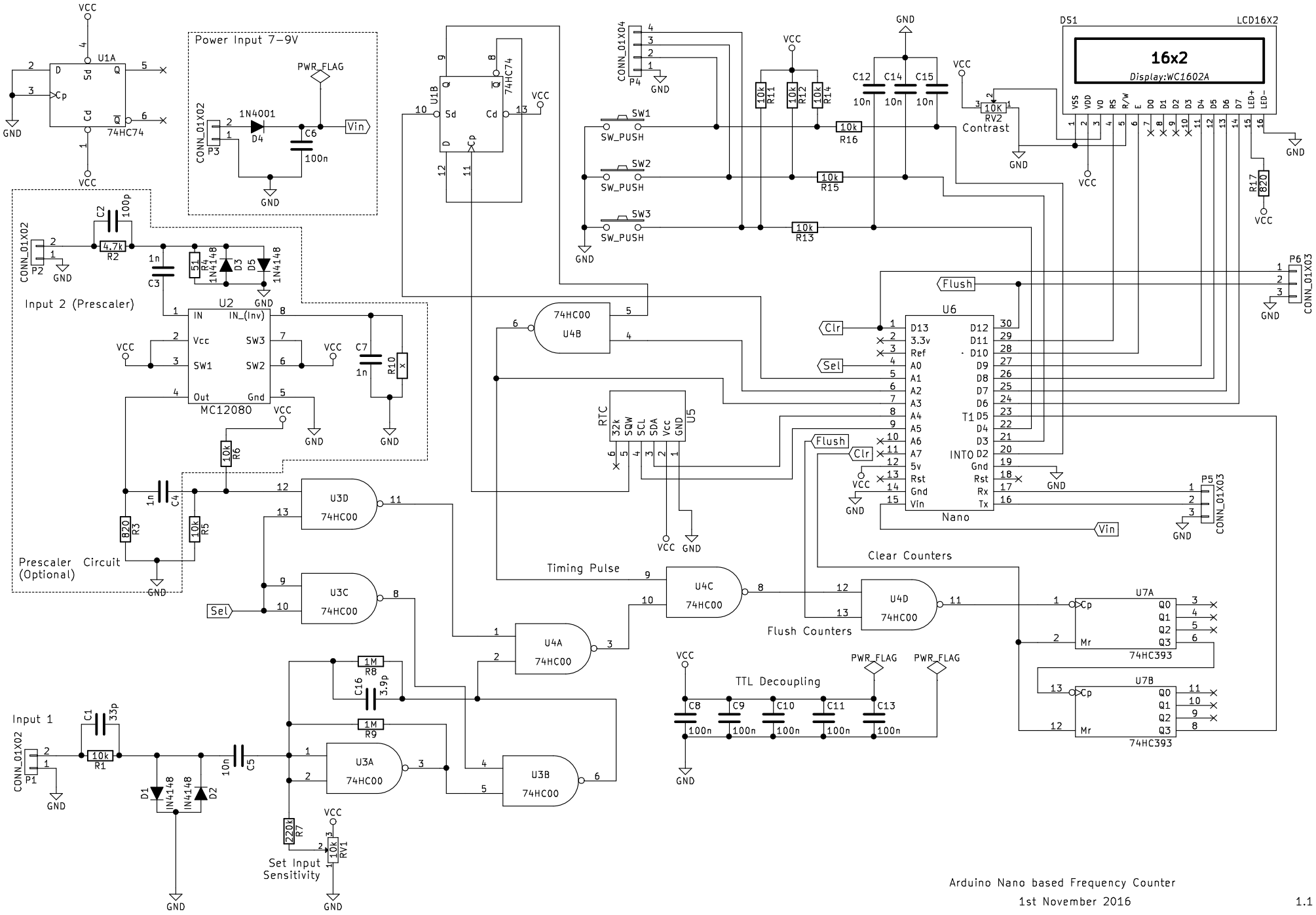

Arduino Nano based Frequency Counter

1st November 2016

1.1