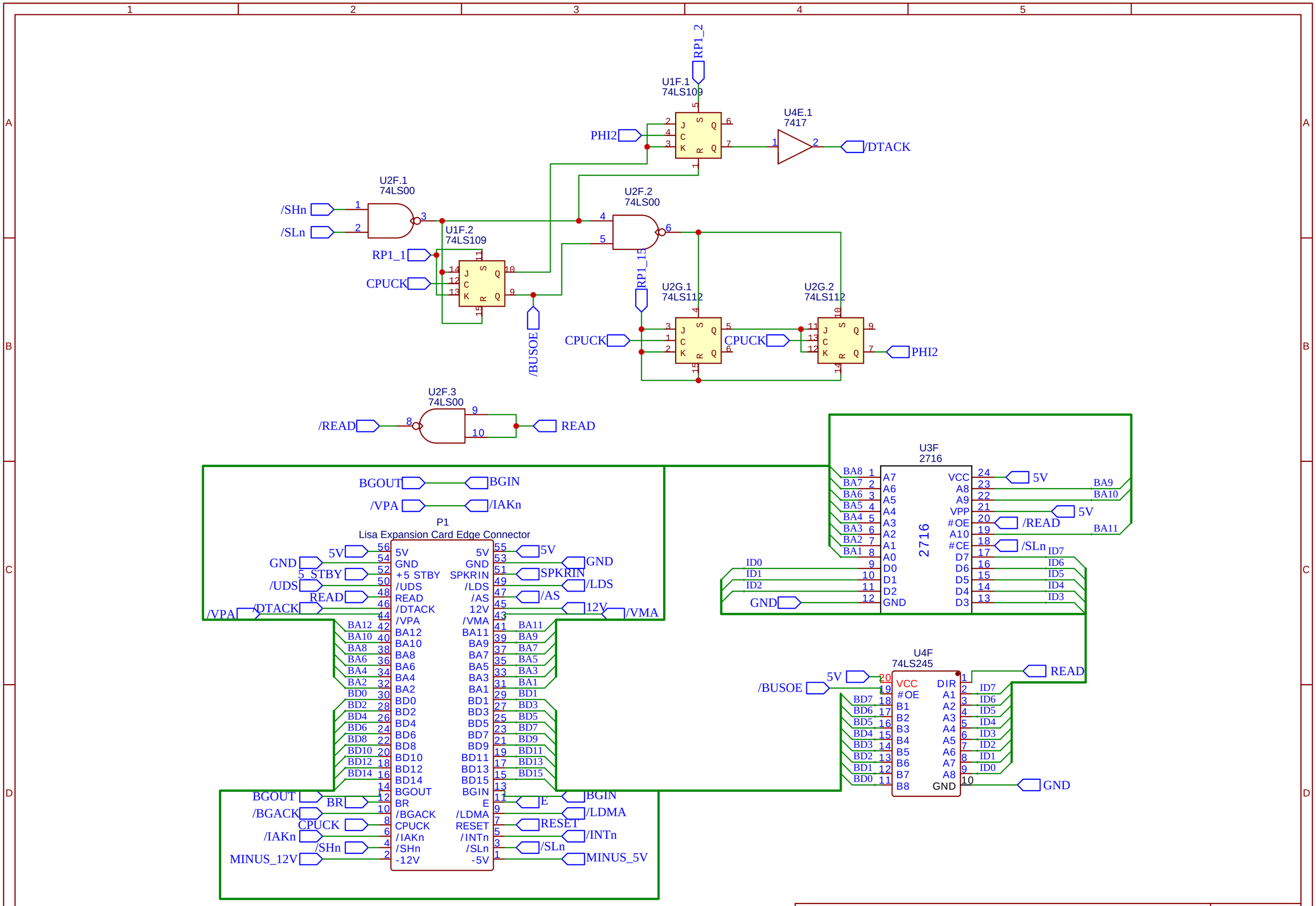

TITLE: Bus Interface Logic

REV: 1.0

Company: Your Company

Sheet: 1/1

Date: 2022-03-22

Drawn By: AlexTheCat123

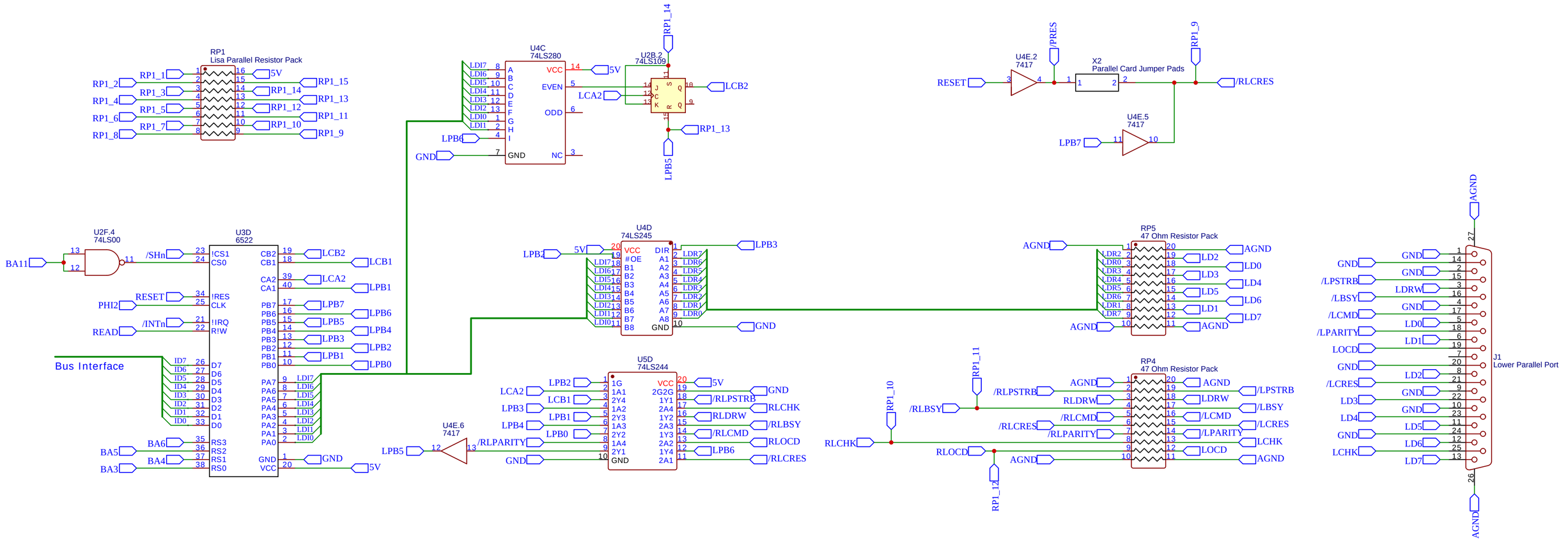

TITLE: Lower Port		REV: 1.0
EasyEDA	Company: Your Company	Sheet: 1/1
	Date: 2022-03-22 Drawn By: AlexTheCat123	

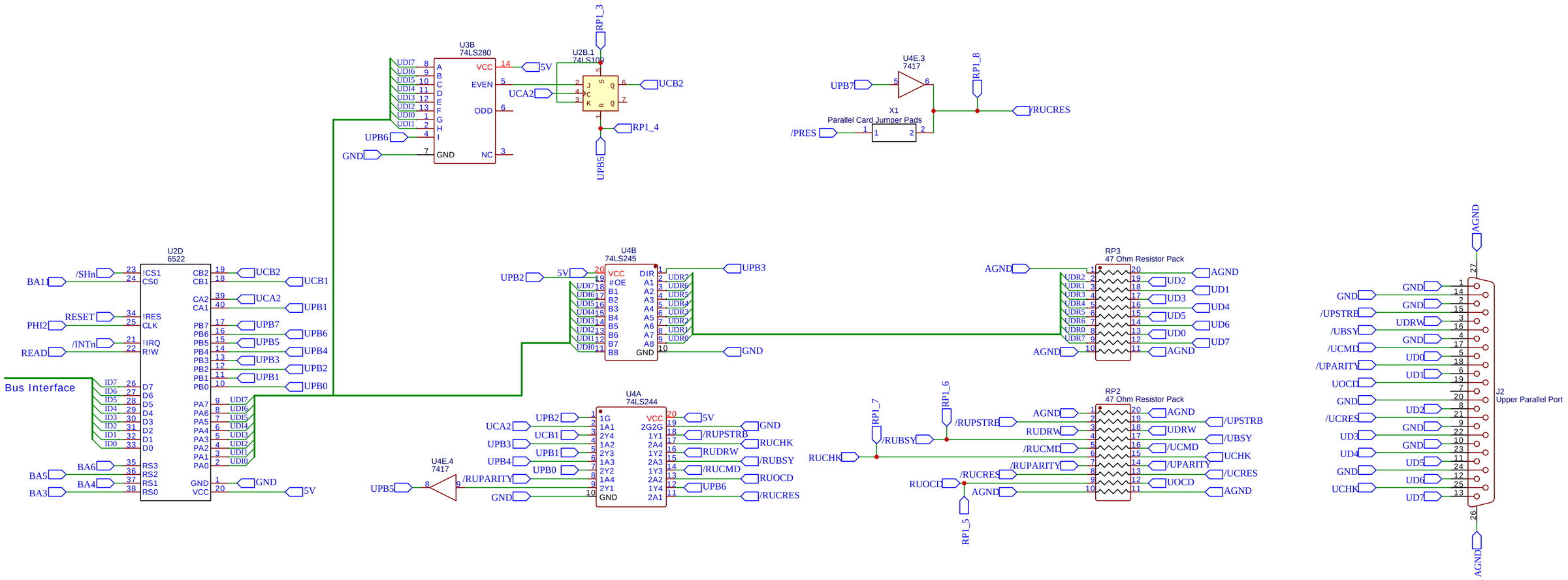

TITLE: Upper Port		REV: 1.0
EasyEDA	Company: Your Company	Sheet: 1/1
	Date: 2022-03-22 Drawn By: AlexTheCat123	

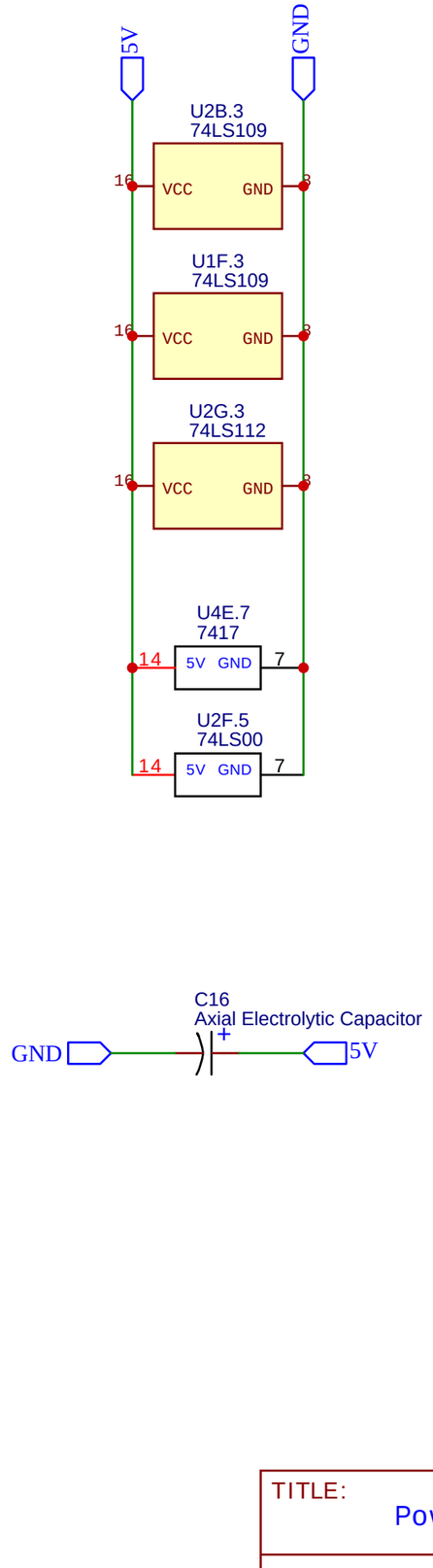

TITLE: Power	REV: 1.0
EasyEDA — Company: Your Company	Sheet: 1/1
Date: 2022-03-22 Drawn By: AlexTheCat123	