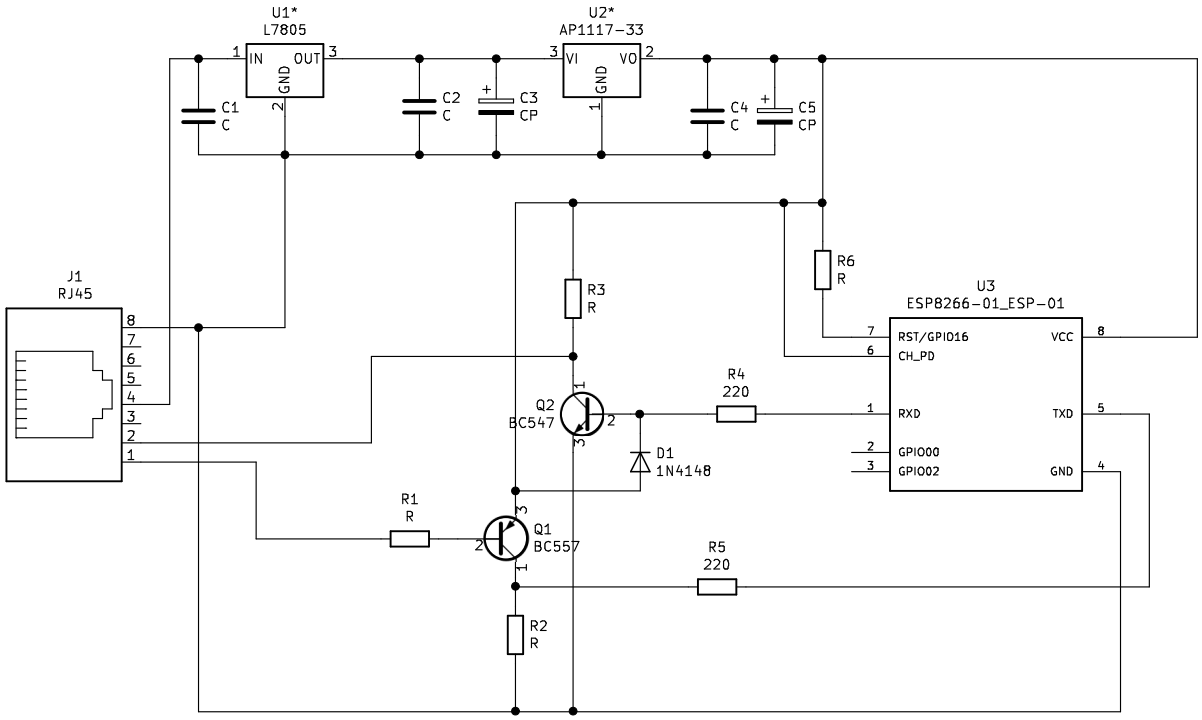

*U1 & U2 can bereplaced by a switching adapter

Sheet: /
File: Voltronics-usb.sch

Title: ESP8266 based interface for Votronics Solar Inverters

Size: A4	Date:	Rev:
KiCad E.D.A. eeschema 5.1.5+dfsg1-2build2		Id: 1/1