(12) INTERNATIONAL APPLICATION PUBLISHED UNDER THE PATENT COOPERATION TREATY (PCT)

(19) World Intellectual Property Organization
International Bureau

(43) International Publication Date
11 May 2018 (11.05.2018)

W ! P O | PCT

(10) International Publication Number
WO 2018/082767 Al

(51) International Patent Classification:
G06F 1/16 (2006.01) *G06F 1/32* (2006.01)
H04L 29/08 (2006.01) *G02B 27/01* (2006.01)

(21) International Application Number:
PCT/EP20 16/076425

(22) International Filing Date:
02 November 2016 (02.1 1.2016)

(25) Filing Language: English

(26) Publication Language: English

(71) Applicant: **TELEFONAKTIEBOLAGET LM ERICSSON (PUBL)** [SE/SE]; S-164 83 Stockholm (SE).

(72) Inventors: **ANDERSSON, Lars;** Edvin Adolphsons v. 9, 16940 Solna (SE). **ARAÚJO, Jose;** Asogatan 198, LGH 1405, 11632 Stockholm (SE).

(74) Agent: **MCPHERSON, Sofle Elisabeth;** ERICSSON, Torshamnsgatan 21-23, 164 80 Stockholm (SE).

(81) Designated States *(unless otherwise indicated, for every kind of national protection available):* AE, AG, AL, AM, AO, AT, AU, AZ, BA, BB, BG, BH, BN, BR, BW, BY, BZ, CA, CH, CL, CN, CO, CR, CU, CZ, DE, DJ, DK, DM, DO, DZ, EC, EE, EG, ES, FI, GB, GD, GE, GH, GM, GT, HN, HR, HU, ID, IL, IN, IR, IS, JP, KE, KG, KN, KP, KR, KW, KZ, LA, LC, LK, LR, LS, LU, LY, MA, MD, ME, MG, MK, MN, MW, MX, MY, MZ, NA, NG, NI, NO, NZ, OM, PA, PE, PG, PH, PL, PT, QA, RO, RS, RU, RW, SA, SC, SD, SE, SG, SK, SL, SM, ST, SV, SY, TH, TJ, TM, TN, TR, TT, TZ, UA, UG, US, UZ, VC, VN, ZA, ZM, ZW.

(84) Designated States *(unless otherwise indicated, for every kind of regional protection available):* ARIPO (BW, GH, GM, KE, LR, LS, MW, MZ, NA, RW, SD, SL, ST, SZ, TZ, UG, ZM, ZW), Eurasian (AM, AZ, BY, KG, KZ, RU, TJ, TM), European (AL, AT, BE, BG, CH, CY, CZ, DE, DK, EE, ES, FI, FR, GB, GR, HR, HU, IE, IS, IT, LT, LU, LV, MC, MK, MT, NL, NO, PL, PT, RO, RS, SE, SI, SK, SM, TR), OAPI (BF, BJ, CF, CG, CI, CM, GA, GN, GQ, GW, KM, ML, MR, NE, SN, TD, TG).

(54) Title: CONTROLLING DISPLAY OF CONTENT USING AN EXTERNAL DISPLAY DEVICE

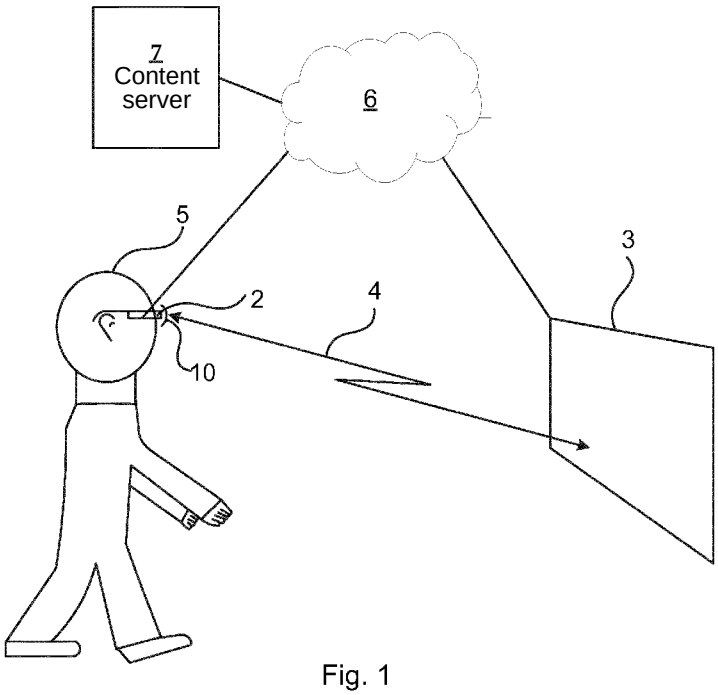

Fig. 1

(57) Abstract: It is presented a method for controlling display of content, the method being performed in a wearable device, the wearable device comprising a head mounted display allowing a user to see both real-world objects and computer-rendered content. The method comprises the steps of: selecting an external display device in a vicinity of the wearable device; determining first visual content to be suitable for being displayed on the external display device; and sending a request for the external display device to display the first visual content and refraining from displaying the first visual content using the head mounted display.

Wo 2018/082767 A1

[Continued on nextpage]

Published:
— *with international search report (Art. 21(3))*

CONTROLLING DISPLAY OF CONTENT USING AN EXTERNAL DISPLAY DEVICE

TECHNICAL FIELD

The invention relates to a method, wearable devices, a computer program and a computer program product for controlling display of content using an external display device.

BACKGROUND

Augmented reality (AR) is foreseen to become an integral technology in the networked society and potently disrupt the consumer electronics market. AR is here used to denote the concept of presenting a combination of real-world objects and computer-rendered content to a user. Specifically, one implementation of AR implies layering information such as text, images or videos on top of reality, on a user's view of the world via a see-through Head Mounted Display (HMD). One application of AR is to allow users to see and interact remotely and in 3D (three dimension), as if each participant share the same physical space. Hence, remote communication and interaction could become as natural as face-to-face communication.

A popular example of AR is the 2016 phenomenon of Pokemon Go, which has truly put forward the advantages of AR in the way people interact with each other and with video games.

In 2016, Microsoft launched Hololens, a mobile AR HMD. Several other HMDs are being launched by other companies including Meta and Magic Leap, which are set to improve the AR technology even further.

However, the Hololens battery lifetime ranges between 2.5 hours and 5.5 hours, depending on load. In order for an HMD to replace a smartphone, its battery life has to be extended.

SUMMARY

It is an object to improve power efficiency for a wearable device allowing a user to see both real-world objects and computer-rendered content.

According to a first aspect, it is presented a method for controlling display of content, the method being performed in a wearable device, the wearable device comprising a head mounted display allowing a user to see both real-world objects and computer-rendered content. The method comprises the steps of: selecting an external display device in a vicinity of the wearable device; determining first visual content to be suitable for being displayed on the external display device; and sending a request for the external display device to display the first visual content and refraining from displaying the first visual content using the head mounted display.

The first visual content may comprise streaming video.

The first visual content may comprise computer graphics.

The step of sending the request may comprise requesting the external display device to both render the first visual content and display the first visual content.

The step of sending the request may comprise sending the request to a content server, requesting the content server to transmit the first visual content to the external display device.

The step of determining the first visual content may comprise determining that there is no privacy setting associated with the first visual content preventing display of the first visual content on the external display device.

The step of determining first visual content may comprise determining first visual content being two-dimensional visual content, and determining three-dimensional visual content to be second visual content which is unsuitable for being displayed on the external display device.

The method may further comprise the step of: displaying the second visual content using the head mounted display.

The method may further comprise the step of: obtaining a current battery level of the wearable device. In such a case, the step of determining first

visual content comprises easier considering visual content to be suitable for being displayed on the external display device when the battery level is lower.

The method may further comprise the step of: adapting the first visual content for being displayed on the external display device.

The step of selecting an external display device may comprise determining that a direction of movement of the wearable device is towards the external display device.

The step of selecting an external display device may comprise selecting one of a plurality of external display devices based on a battery level of at least one of the plurality of external display devices.

The step of selecting an external display device may comprise selecting one of a plurality of external display devices based on energy consumption of each one of the plurality of external display devices.

According to a second aspect, it is presented a wearable device for controlling display of content. The wearable device comprises: a head mounted display allowing a user to see both real-world objects and computer-rendered content; a processor; and a memory. The memory stores instructions that, when executed by the processor, cause the wearable device to: select an external display device in a vicinity of the wearable device; determine first visual content to be suitable for being displayed on the external display device; and send a request for the external display device to display the first visual content and refraining from displaying the first visual content using the head mounted display.

The first visual content may comprise streaming video.

The first visual content may comprise computer graphics.

The instructions to send the request may comprise instructions that, when executed by the processor, cause the wearable device to requesting the

external display device to both render the first visual content and display the first visual content.

The instructions to send the request may comprise instructions that, when executed by the processor, cause the wearable device to send the request to a content server, requesting the content server to transmit the first visual content to the external display device.

The instructions to determine the first visual content may comprise instructions that, when executed by the processor, cause the wearable device to determine that there is no privacy setting associated with the first visual content preventing display of the first visual content on the external display device.

The instructions to determine first visual content may comprise instructions that, when executed by the processor, cause the wearable device to, determine first visual content being two-dimensional visual content, and determine three-dimensional visual content to be second visual content which is unsuitable for being displayed on the external display device.

The wearable device may further comprise instructions that, when executed by the processor, cause the wearable device to display the second visual content using the head mounted display.

The wearable device may further comprise instructions that, when executed by the processor, cause the wearable device to obtain a current battery level of the wearable device. In such a case, the instructions to determine first visual content comprise instructions that, when executed by the processor, cause the wearable device to easier consider visual content to be suitable for being displayed on the external display device when the battery level is lower.

The wearable device may further comprise instructions that, when executed by the processor, cause the wearable device to adapt the first visual content for being displayed on the external display device.

The instructions to select an external display device may comprise instructions that, when executed by the processor, cause the wearable device to determine that a direction of movement of the wearable device is towards the external display device.

The instructions to select an external display device may comprise instructions that, when executed by the processor, cause the wearable device to select one of a plurality of external display devices based on a battery level of at least one of the plurality of external display devices.

The instructions to select an external display device may comprise instructions that, when executed by the processor, cause the wearable device to select one of a plurality of external display devices based on energy consumption of each one of the plurality of external display devices.

According to a third aspect, it is presented a wearable device comprising: means for selecting an external display device in a vicinity of the wearable device, the wearable device comprising a head mounted display allowing a user to see both real-world objects and computer-rendered content; means for determining first visual content to be suitable for being displayed on the external display device; and means for sending a request for the external display device to display the first visual content and refraining from displaying the first visual content using the head mounted display.

According to a fourth aspect, it is presented a computer program for controlling display of content, using a wearable device comprising a head mounted display allowing a user to see both real-world objects and computer-rendered content. The computer program comprises computer program code which, when run on the wearable device causes the wearable device to: select an external display device in a vicinity of the wearable device; determine first visual content to be suitable for being displayed on the external display device; and send a request for the external display device to display the first visual content and refraining from displaying the first visual content using the head mounted display.

According to a fifth aspect, it is presented a computer program product comprising a computer program according to the fourth aspect, and a computer readable means on which the computer program is stored.

Generally, all terms used in the claims are to be interpreted according to their ordinary meaning in the technical field, unless explicitly defined otherwise herein. All references to "a/an/the element, apparatus, component, means, step, etc." are to be interpreted openly as referring to at least one instance of the element, apparatus, component, means, step, etc., unless explicitly stated otherwise. The steps of any method disclosed herein do not have to be performed in the exact order disclosed, unless explicitly stated.

BRIEF DESCRIPTION OF THE DRAWINGS

The invention is now described, by way of example, with reference to the accompanying drawings, in which:

Fig l is a schematic diagram illustrating an environment where embodiments presented herein can be applied;

Fig 2 is a schematic diagram illustrating components of the wearable device and the external display device of Fig 1;

Fig 3 is a schematic drawing illustrating a field of view of a user using the wearable device of Fig 1;

Fig 4 is a schematic drawing illustrating three users, where each user has his/her own wearable device;

Figs 5A-B are flow charts illustrating embodiments of methods performed in the wearable device for controlling display of content;

Fig 6 is a schematic diagram showing functional modules of the wireless device of Fig 2 according to one embodiment; and

Fig 7 shows one example of a computer program product comprising computer readable means.

DETAILED DESCRIPTION

The invention will now be described more fully hereinafter with reference to the accompanying drawings, in which certain embodiments of the invention are shown. This invention may, however, be embodied in many different forms and should not be construed as limited to the embodiments set forth herein; rather, these embodiments are provided by way of example so that this disclosure will be thorough and complete, and will fully convey the scope of the invention to those skilled in the art. Like numbers refer to like elements throughout the description.

Fig 1 is a schematic diagram illustrating an environment where embodiments presented herein can be applied. A user 5 wears a wearable device 2. The wearable device comprises a head mounted display (HMD) 10, which allows the user 5 to see both real-world objects and computer-rendered content. Real-world objects are physical objects which are not computer-rendered, i.e. not virtual. For instance, the HMD 10 can be implemented using a Microsoft Hololens. It is to be noted that he term 'computer' used herein is to be interpreted as any electronic device with digital processing capabilities, regardless of size. Hence, the term computer comprises devices such as servers, desktop computers, laptop computers, tablet computers, smart phones, mobile phones, smart watches, etc.

Since the user 5 can experience a combination of real-world objects and computer-rendered content, the wearable device 2 allows for a plethora of applications in the field often referred to augmented reality (AR).

According to embodiments presented herein, at least part of content originally intended for display using the HMD 10 can be offloaded from the wearable device 2 to an external display device 3. It is to be noted that the term external implies that the external display device 3 is external in relation to the wearable device 2. The external display device 3 is any type of device comprising a display which can be used to show computer-rendered content. For instance, the external display device 3 can be any of a television, a computer screen, a smart phone, a smart watch, a tablet computer, a

projector, etc. While only one external display device 3 is shown in Fig 1, any number of external display devices can be provided in the vicinity of the user 5.

Each one of the wearable device 2 and the external display device 3 is connected to a network 6. The network can e.g. be a local area network (LAN) and/or a wide area network (WAN) such as the Internet. A content server 7 is also connected to the network 6. The content server 7 provides content for rendering at the wearable device 2 and/or the external display device 3.

Moreover, there is a communication link 4 between the wearable device 2 and the external device 3. The communication link 4 between the wearable device 2 and the external device 3 can be implemented as a point-to-point communication link or the communication link 4 can be implemented via the network 6.

According to embodiments presented herein, the wearable device 2 can offload at least part of content, originally intended for display using the HMD 10, from the wearable device 2 to an external display device 3. This can save a significant amount of power in the wearable device 2, thus prolonging battery life in the wearable device 2.

Fig 2 is a schematic diagram illustrating components of the wearable device 2 and the external display device 3 of Fig 1.

First, the wearable device 2 will be described. A processor 60 is provided using any combination of one or more of a suitable central processing unit (CPU), multiprocessor, microcontroller, digital signal processor (DSP), application specific integrated circuit etc., capable of executing software instructions 67 stored in a memory 64, which can thus be a computer program product. The processor 60 can be configured to execute the method described with reference to Figs 5A-B below.

The memory 64 can be any combination of read and write memory (RAM) and read only memory (ROM). The memory 64 also comprises persistent

storage, which, for example, can be any single one or combination of magnetic memory, optical memory, solid state memory or even remotely mounted memory.

A data memory 68 is also provided for reading and/or storing data during execution of software instructions in the processor 60. The data memory 68 can be any combination of read and write memory (RAM) and read only memory (ROM).

The wearable device 2 further comprises an I/O interface 62 for communicating with external entities such as with the external display device 3 over the communication link 4. For instance, the I/O interface 62 can be used for communication using any suitable wireless communication protocol, e.g. any one or more of Bluetooth, any one of the IEEE 802.11x standards (also known as WiFi), Bluetooth Low Energy (BLE), ZigBee, etc.

A head mounted display (HMD) 10 is a display which, when in operation, allows the user to see both real-world objects and computer-rendered content. Computer-rendered content is here content which is rendered by the wearable device 2. The HMD 10 can e.g. be implemented as eyeglasses with a display, which can be transparent when no content is displayed on the display.

The wearable device 2 also comprises a user input device 63 allowing the wearable device 2 to accept input from the user 5. For instance, the user input device 63 can comprise any one of more of a microphone (for voice control), a push button, eye tracking, etc.

The wearable device 2 is portable and thus comprises a battery 69 for power. The battery 69 can be a rechargeable battery and/or a single use, replaceable, battery 69.

Other components of the wearable device 2 are omitted in order not to obscure the concepts presented herein.

Now, the external display device 3 will be described. A processor 70 is provided using any combination of one or more of a suitable central processing unit (CPU), multiprocessor, microcontroller, digital signal processor (DSP), application specific integrated circuit etc., capable of executing software instructions 76 stored in a memory 74, which can thus be a computer program product.

The memory 74 can be any combination of read and write memory (RAM) and read only memory (ROM). The memory 74 also comprises persistent storage, which, for example, can be any single one or combination of magnetic memory, optical memory, solid state memory or even remotely mounted memory.

A data memory 78 is also provided for reading and/or storing data during execution of software instructions in the processor 70. The data memory 78 can be any combination of read and write memory (RAM) and read only memory (ROM).

The external display device 3 further comprises an I/O interface 72 for communicating with external entities such as with the wearable device 2 (over the communication link 4) and the network 6. For instance, the I/O interface 72 can be used for communication using any suitable communication protocol, e.g. any one or more of Ethernet, Bluetooth, any one of the IEEE 802.11x standards (also known as WiFi), Bluetooth Low Energy (BLE), ZigBee, etc.

A display 71 is a display which can display computer-rendered content, e.g. rendered by the external display device 3.

A power source 79 is used for powering the external display device 3. The power source can e.g. be a mains connection and/or a battery. When present, the battery 79 can be a rechargeable battery and/or a single use, replaceable, battery 79.

Other components of the external display device 3 are omitted in order not to obscure the concepts presented herein.

Fig 3 is a schematic drawing illustrating a field of view 20 of a user using the wearable device 2 of Fig 1.

The field of view 20 limits the viewing experience of the user, at least for computer-rendered content. Within the field of view 20, the user can see both real-world objects, such as a chair 25a and a table 25b. Moreover, the user can see computer-rendered content 22 within the field of view 20. The computer-rendered content 22 can be any combination of text, images, video and computer generated graphics.

There is also an external display device 3, in this example a television, within the field of view 21. In this example, the wearable device 2 has determined to offload the display of content, in the form of a video clip, to the external display device 3. In this way, the user can still view the video clip, but it is the external display device 3 and not the wearable device 2 that displays the video clip, thus saving power use in the wearable device 2.

Fig 4 is a schematic drawing illustrating three users 5a-c, where each user 5a-c has his/her own wearable device 2a-c. An external display device 3 is within view of all three wearable devices 2a-c.

In this situation, if all three users 5a-c e.g. are watching a live sports event on their respective wearable devices 2a-c, the display of the sports event can be offloaded from all three wearable devices 2a-c to the external display device 3. In total, this saves even more power since only one device is used for the display of the sports event instead of three.

It is to be noted, however, that there may still be content which is displayed using the respective wearable displays 2a-c due to privacy settings. For instance, if the second user 5b receives a text message, this is content which can be configured to be displayed using the wearable device 2b, and will not be offloaded to the external display device 3. In this way, only the second user

5b can read the text message. Also, if there is user specific content (or content that one user has signed up for, in e.g. the sports event to receive statistics of certain team or players), this could be done for each one individually, but the main content could be shown on the external display device for all users to see.

Figs 5A-B are flow charts illustrating embodiments of methods performed in the wearable device for controlling display of content. As explained above, the wearable device comprises a head mounted display allowing a user to see both real-world objects and computer-rendered content. First, embodiment of methods illustrated by Fig 5A will be described.

In a *select external display* step 40, an external display device in a vicinity of the wearable device is selected.

In one embodiment, this comprises determining that a direction of movement of the wearable device is towards the external display device which is selected. Optionally, the selection of external display device is also based on the orientation of the head and/or eyes of the user.

In one embodiment, this comprises selecting one of a plurality of external display devices based on a battery level of at least one of the plurality of external display devices. For instance, there may be two potential external devices: a tablet computer and a laptop computer within view of the user. The selection between these two external devices can then be based on their respective battery levels, such that the external device with the most amount of battery is selected to the be external device for display of content.

In one embodiment, this comprises selecting one of a plurality of external display devices based on energy consumption of each one of the plurality of external display devices. In other words, the external device which consumes the least amount of energy, regardless of power source, can be selected to reduce total power consumption for consuming the content.

In one embodiment, a predicted battery level of the wearable device is considered when selecting the external display device. The predicted battery level can e.g. be based a current set of applications executing in the wearable device, and/or a current total energy usage rate in the wearable device.

In a ***determine 1st visual content*** step 42, first visual content is determined to be suitable for being displayed on the external display device. The first visual content can comprise streaming video and/or computer graphics.

In one embodiment, this comprises determining that there is no privacy setting associated with the first visual content preventing display of the first visual content on the external display device. For instance, as illustrated above, personal messages (such as text messages or e-mail messages) can be prevented from being displayed externally.

In one embodiment, this comprises determining first visual content being two-dimensional visual content, while three-dimensional visual content is determined to be a second visual content which is unsuitable for being displayed on the external display device. In many situations, it is only the HMD which is capable of displaying three-dimensional content.

Optionally, the wearable device considers the energy spent on the communication required to offload the first visual content. It may be that if the visual content is very dynamic and heavy in size, and the visual content has to be sent from the wearable device to the external device more or less constantly. The wearable device can then decide that such content is not to form part of the first visual content (to be offloaded) since the constant communication ends up using more battery power than just displaying the visual using the HMD. In a ***send external display request*** step 44, a request is sent for the external display device to display the first visual content. The wearable device then refrains from displaying the first visual content using the head mounted display.

In one embodiment, this comprises requesting the external display device to both render the first visual content and display the first visual content.

Alternatively, the wearable device renders the first visual content but the external display device displays the first visual content.

In one embodiment, this comprises sending the request to a server, requesting the server to transmit the first visual content to the external display device. In such an embodiment, the wearable device is completely offloaded in handling the first visual content, reducing power usage even more in the wearable device.

Looking now to Fig 5B, only new or modified steps, compared to what is described with reference to Fig 5A above, is now described.

In an ***obtain battery level*** step 41, a current battery level of the wearable device is obtained. When the battery level is available, the ***determine visual content*** step 42 comprises easier considering visual content to be suitable for being displayed on the external display device when the battery level is lower. In other words, the offloading is more aggressive when the battery level in the wearable device is low. Easier here implies a lower threshold to offload. Such a threshold can e.g. be based on a distance to an external display device, a minimum size of an external display device, an angular distance of the external display device from a centre viewing angle of the user etc.

In an ***adapt 1st visual content*** step 43, the first visual content is adapted for being displayed on the external display device. For instance, if the external display device is a smart watch, a video clip may need to be adapted in resolution and/or in frame rate.

In a ***display 2nd visual content*** step 45, the second visual content is displayed using the head mounted display. Using the example of Fig 4 explained above, this can e.g. be the display of the second visual content being a text message.

An example of applying an embodiment of the described method is of a user watching a video using an HMD, where the video is (virtually) being displayed on a wall. At the same time an external display device in the form of a projector is available in the same room which projects content in one of the

room walls (not necessarily the same wall where the HMD is currently displaying the video). In order to save energy, the HMD stops displaying the video and the video display is performed by the projector instead. However, if the user requires to visualize a 3D object at a certain moment, that object can be displayed in the HMD while the additional 2D video is still displayed by the projector on the wall.

In the above example, the rendering may be performed locally at each external display device based on the video which is to be displayed at each of the devices. In another example, if certain components of the video are static throughout the visualisation, the rendering may be performed by the wearable device and the projector only performs the display. In this way, the rendering is performed at a low frequency (potentially even only once, if the content does not change through the presentation), effectively reducing the processing power required for rendering.

In another example, the user has an external display device in the form of a digital screen (e.g. tablet computer) within line of sight and is wearing an HMD. The HMD may then offload all 2D rendering and display components to the digital screen while keeping the 3D rendering and display to be displayed using the HMD. As in the above example, static 2D or 3D content components may be rendered at the HMD (e.g. text) and transmitted to the external display device.

In another embodiment, the wearable device is able to detect the direction of motion of the wearable device and thus predicts which external display devices will be in line of sight with the user. In this way, the wearable device may schedule the transmission of future content for display on the external display device, while displaying directional information in the HMD, informing the user of such future action (e.g. an arrow pointing to the external display device which will be performing the display of the information and at what time).

In another embodiment, the external display devices inform the wearable device of its capabilities (e.g. rendering and display characteristics, battery level) and location in order for the wearable device to consider this information when deciding what visual content to offload and whether and how to adapt the visual content for display on the external display device(s).

In another embodiment, due to the availability of a suitable external display device in a nearby room, the wearable device may inform the user that the user could move to the nearby room in order to save battery. In this way, line of sight is not required for offloading visual content.

In another embodiment, the wearable device may detect that the available display has a screen size that is very small (e.g. smartwatch). However, due to low battery levels, the visual content is still displayed on the smart watch, albeit with the visual content being adapted for the small display.

In a related embodiment, the external devices may be displaying content where such content may have components in common with the content that is to be displayed by the HMD (content B and content A are correlated). In that way, the HMD does not need to transmit the overlapping components of content A to the external device which saves bandwidth. For instance, if the wearable device shows a video stream from a live sports event which is also displayed on a television within view of the user, the wearable display can simply refrain from displaying the live sports event.

In another embodiment, the external display device may have both rendering and display capabilities, while in others the external display device may have only display capabilities for the visual content in question.

Fig 6 is a schematic diagram showing functional modules of the wireless device 2 of Fig 2 according to one embodiment. The modules are implemented using software instructions such as a computer program executing in the wireless device. Alternatively or additionally, the modules are implemented using hardware, such as any one or more of an ASIC (Application Specific Integrated Circuit), an FPGA (Field Programmable Gate

Array), or discrete logical circuits. The modules correspond to the steps in the methods illustrated in Figs 5A and 5B.

A selector 80 corresponds to step 40. An obtainer corresponds to step 41. A determiner 82 corresponds to step 42. An adaptor 83 corresponds to step 43. A requestor 84 corresponds to step 44. A displayer 85 corresponds to step 45.

Fig 7 shows one example of a computer program product comprising computer readable means. On this computer readable means a computer program 91 can be stored, which computer program can cause a processor to execute a method according to embodiments described herein. In this example, the computer program product is an optical disc, such as a CD (compact disc) or a DVD (digital versatile disc) or a Blu-Ray disc. As explained above, the computer program product could also be embodied in a memory of a device, such as the computer program product 67 of Fig 2. While the computer program 91 is here schematically shown as a track on the depicted optical disk, the computer program can be stored in any way which is suitable for the computer program product, such as a removable solid state memory, e.g. a Universal Serial Bus (USB) drive.

The invention has mainly been described above with reference to a few embodiments. However, as is readily appreciated by a person skilled in the art, other embodiments than the ones disclosed above are equally possible within the scope of the invention, as defined by the appended patent claims.

CLAIMS

1. A method for controlling display of content, the method being performed in a wearable device (2), the wearable device comprising a head mounted display (10) allowing a user to see both real-world objects and computer-rendered content, the method comprising the steps of:

selecting (40) an external display device (3) in a vicinity of the wearable device (2);

determining (42) first visual content (21) to be suitable for being displayed on the external display device (3); and

sending (44) a request for the external display device (3) to display the first visual content (21) and refraining from displaying the first visual content (21) using the head mounted display (10).

2. The method according to claim 1, wherein the first visual content comprises streaming video.

3. The method according to claim 1, wherein the first visual content comprises computer graphics.

4. The method according to any one of the preceding claims, wherein the step of sending (44) the request comprises requesting the external display device (3) to both render the first visual content and display the first visual content.

5. The method according to any one of the preceding claims, wherein the step of sending (44) the request comprises sending the request to a content server, requesting the content server to transmit the first visual content to the external display device.

6. The method according to any one of the preceding claims, wherein the step of determining (42) the first visual content comprises determining that there is no privacy setting associated with the first visual content preventing display of the first visual content on the external display device (3).

7. The method according to any one of the preceding claims, wherein the step of determining (42) first visual content comprises determining first visual content being two-dimensional visual content, and determining three-dimensional visual content to be second visual content (22) which is unsuitable for being displayed on the external display device (3).

8. The method according to claim 7, further comprising the step of:

displaying (45) the second visual content (22) using the head mounted display (10).

9. The method according to any one of the preceding claims, further comprising the step of:

obtaining (41) a current battery level of the wearable device (2); and

wherein the step of determining (42) first visual content comprises easier considering visual content to be suitable for being displayed on the external display device (3) when the battery level is lower.

10. The method according to any one of the preceding claims, further comprising the step of:

adapting (43) the first visual content for being displayed on the external display device (3).

11. The method according to any one of the preceding claims, wherein the step of selecting (40) an external display device (3) comprises determining that a direction of movement of the wearable device (2) is towards the external display device (3).

12. The method according to any one of the preceding claims, wherein the step of selecting (40) an external display device (3) comprises selecting one of a plurality of external display devices based on a battery level of at least one of the plurality of external display devices.

13. The method according to any one of the preceding claims, wherein the step of selecting (40) an external display device (3) comprises selecting one of

a plurality of external display devices based on energy consumption of each one of the plurality of external display devices.

14. A wearable device (2) for controlling display of content, the wearable device (2) comprising:

a head mounted display (10) allowing a user to see both real-world objects and computer-rendered content;

a processor (60); and

a memory (64) storing instructions (66) that, when executed by the processor, cause the wearable device (2) to:

select an external display device (3) in a vicinity of the wearable device (2);

determine first visual content (21) to be suitable for being displayed on the external display device (3); and

send a request for the external display device (3) to display the first visual content (21) and refraining from displaying the first visual content (21) using the head mounted display (10).

15. The wearable device (2) according to claim 14, wherein the first visual content comprises streaming video.

16. The wearable device (2) according to claim 14, wherein the first visual content comprises computer graphics.

17. The wearable device (2) according to any one of claims 14 to 16, wherein the instructions to send the request comprise instructions (66) that, when executed by the processor, cause the wearable device (2) to requesting the external display device (3) to both render the first visual content and display the first visual content.

18. The wearable device (2) according to any one of claims 14 to 17, wherein the instructions to send the request comprise instructions (66) that, when executed by the processor, cause the wearable device (2) to send the request to a content server, requesting the content server to transmit the first visual content to the external display device.

19. The wearable device (2) according to any one of claims 14 to 18, wherein the instructions to determine the first visual content comprise instructions (66) that, when executed by the processor, cause the wearable device (2) to determine that there is no privacy setting associated with the first visual content preventing display of the first visual content on the external display device (3).

20. The wearable device (2) according to any one of claims 14 to 19, wherein the instructions to determine first visual content comprise instructions (66) that, when executed by the processor, cause the wearable device (2) to, determine first visual content being two-dimensional visual content, and determine three-dimensional visual content to be second visual content (22) which is unsuitable for being displayed on the external display device (3).

21. The wearable device (2) according to claim 20, further comprising instructions (66) that, when executed by the processor, cause the wearable device (2) to display the second visual content (22) using the head mounted display (10).

22. The wearable device (2) according to any one of claims 14 to 21, further comprising instructions (66) that, when executed by the processor, cause the wearable device (2) to obtain a current battery level of the wearable device (2); wherein the instructions to determine first visual content comprise instructions (66) that, when executed by the processor, cause the wearable device (2) to easier consider visual content to be suitable for being displayed on the external display device (3) when the battery level is lower.

23. The wearable device (2) according to any one of claims 14 to 22, further comprising instructions (66) that, when executed by the processor, cause the wearable device (2) to adapt the first visual content for being displayed on the external display device (3).

24. The wearable device (2) according to any one of claims 14 to 23, wherein the instructions to select an external display device (3) comprise instructions (66) that, when executed by the processor, cause the wearable device (2) to

determine that a direction of movement of the wearable device (2) is towards the external display device (3).

25. The wearable device (2) according to any one of claims 14 to 24, wherein the instructions to select an external display device (3) comprise instructions (66) that, when executed by the processor, cause the wearable device (2) to select one of a plurality of external display devices based on a battery level of at least one of the plurality of external display devices.

26. The wearable device (2) according to any one of claims 14 to 25, wherein the instructions to select an external display device (3) comprise instructions (66) that, when executed by the processor, cause the wearable device (2) to select one of a plurality of external display devices based on energy consumption of each one of the plurality of external display devices.

27. A wearable device comprising:

means for selecting (40) an external display device (3) in a vicinity of the wearable device (2), the wearable device comprising a head mounted display (10) allowing a user to see both real-world objects and computer-rendered content;

means for determining (42) first visual content (21) to be suitable for being displayed on the external display device (3); and

means for sending (44) a request for the external display device (3) to display the first visual content (21) and refraining from displaying the first visual content (21) using the head mounted display (10).

28. A computer program (66, 91) for controlling display of content, using a wearable device (2) comprising a head mounted display (10) allowing a user to see both real-world objects and computer-rendered content, the computer program comprising computer program code which, when run on the wearable device (2) causes the wearable device (2) to:

select an external display device (3) in a vicinity of the wearable device (2);

determine first visual content (21) to be suitable for being displayed on

the external display device (3); and

send a request for the external display device (3) to display the first visual content (21) and refraining from displaying the first visual content (21) using the head mounted display (10).

29. A computer program product (64, 90) comprising a computer program according to claim 28, and a computer readable means on which the computer program is stored.

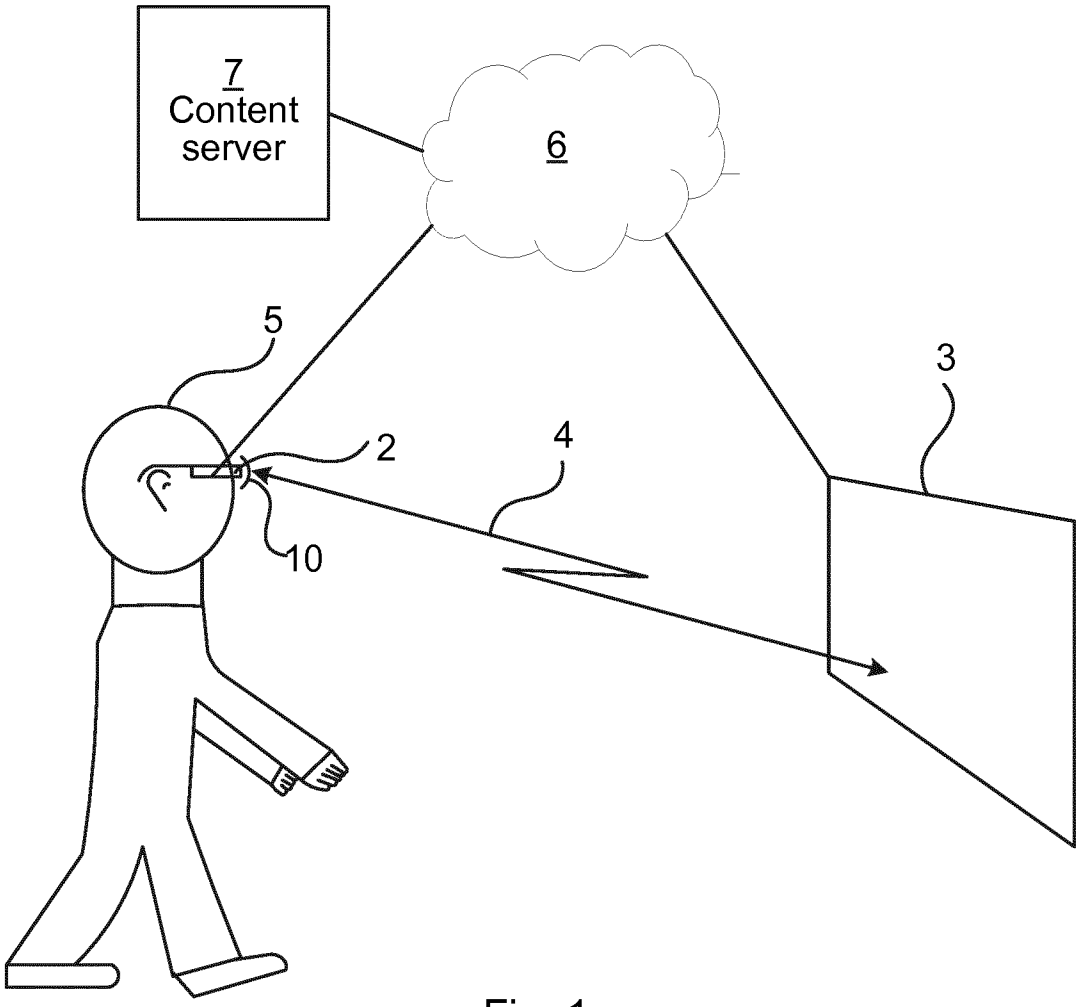
7
Content
server
6
5
3
2
4
10

Fig. 1

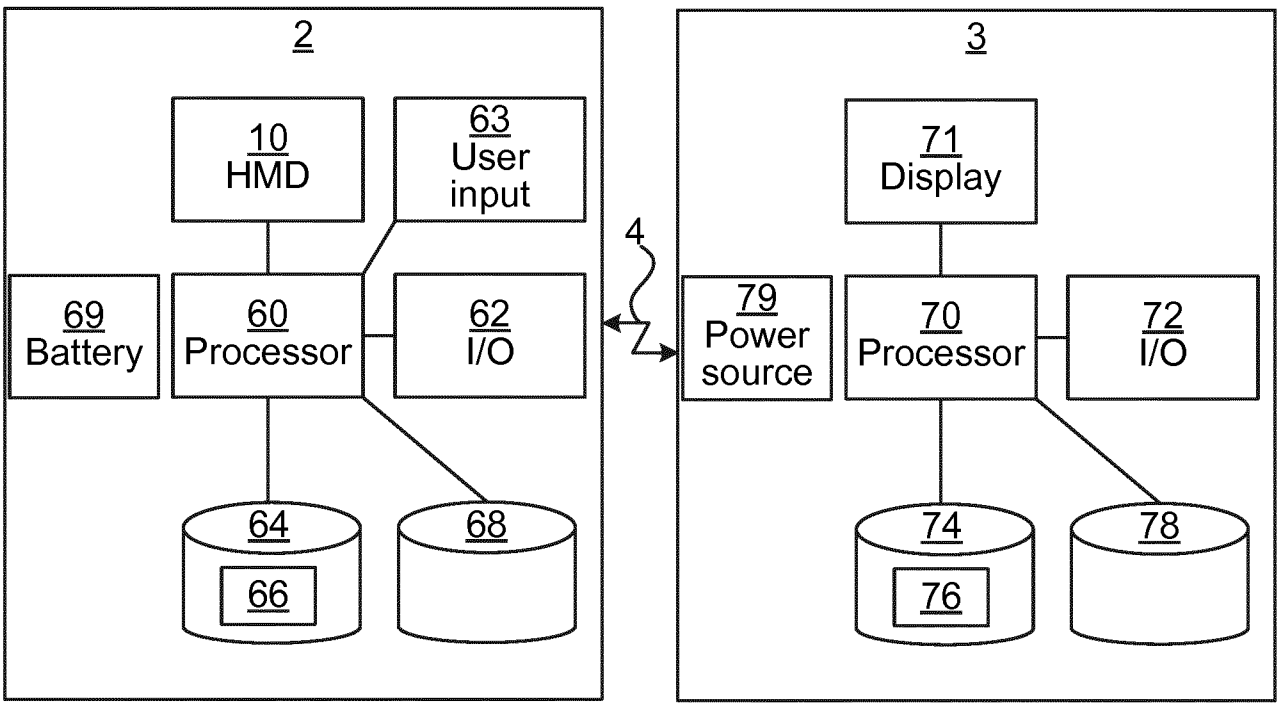
2
10
HMD
63
User
input
69
Battery
60
Processor
62
I/O
64
66
68
4
3
71
Display
79
Power
source
70
Processor
72
I/O
74
76
78

Fig. 2

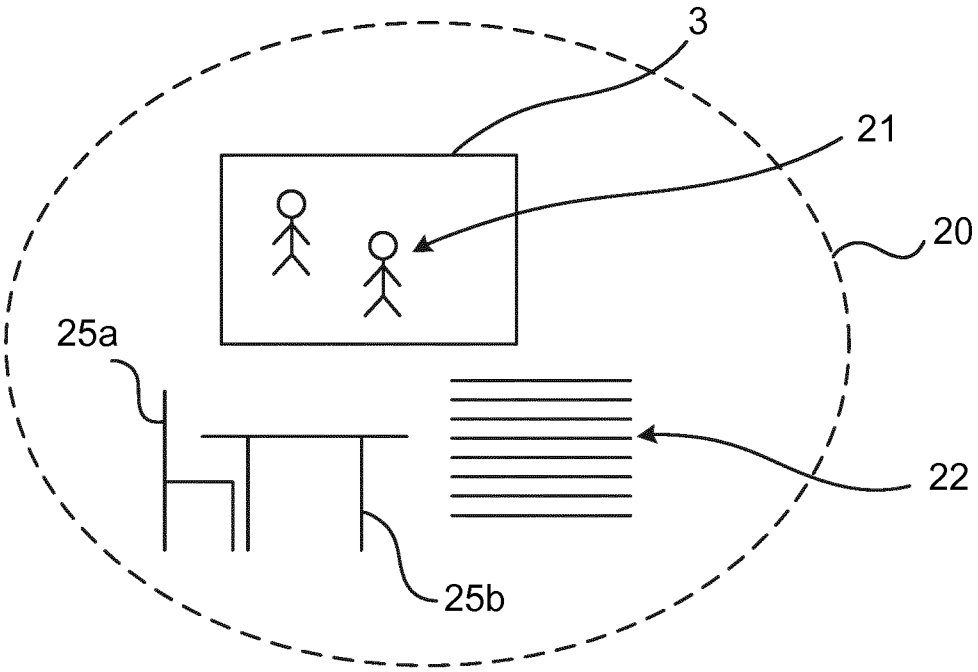

Fig. 3

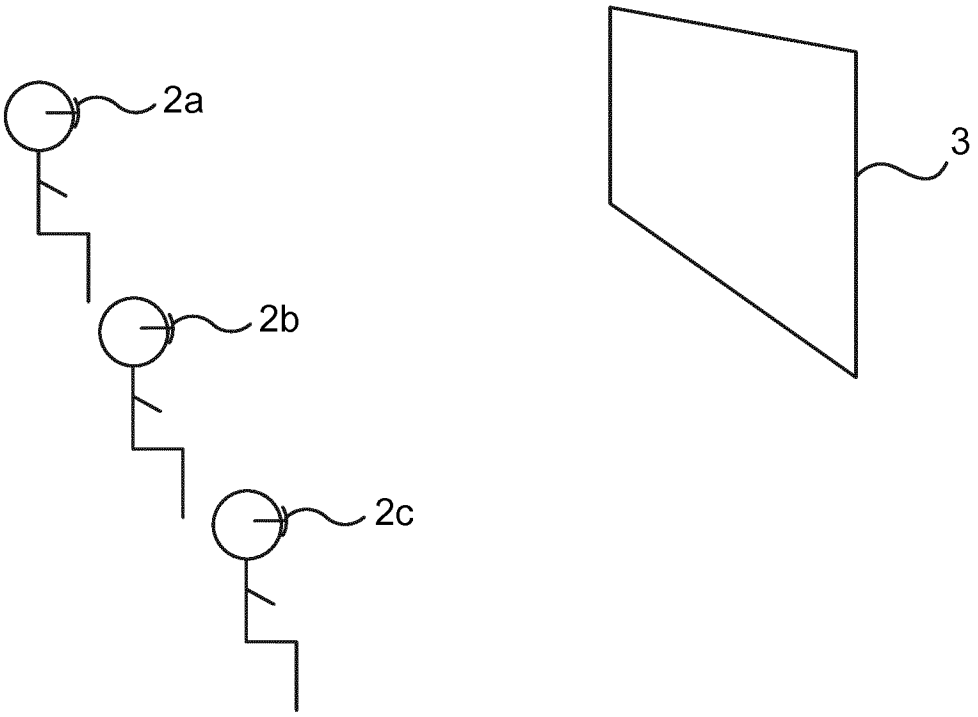

Fig. 4

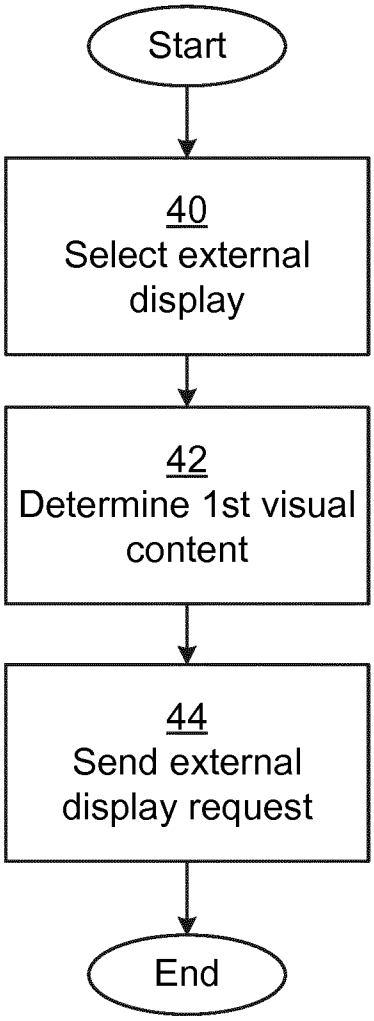
Start
40
Select external display
42
Determine 1st visual content
44
Send external display request
End

Fig. 5A

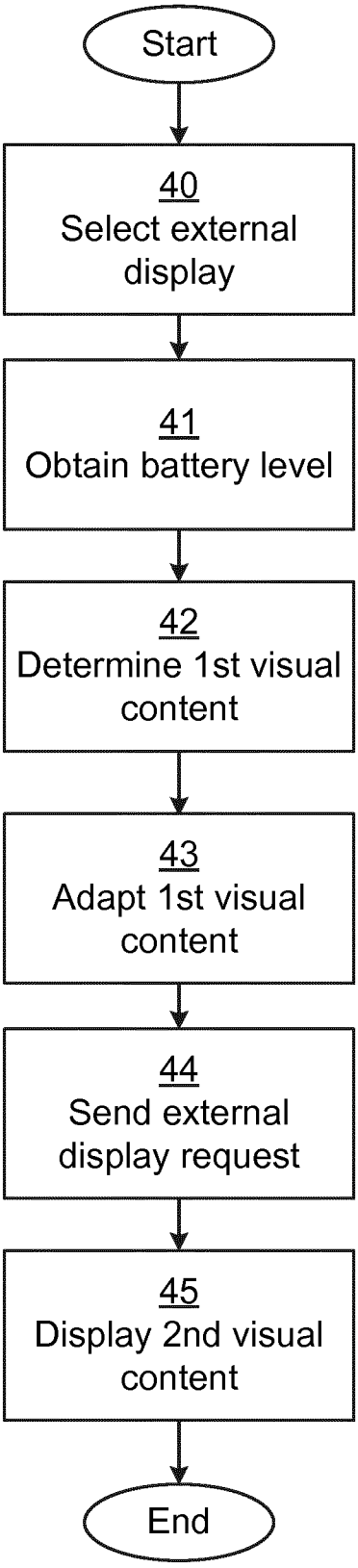
Start
40
Select external display
41
Obtain battery level
42
Determine 1st visual content
43
Adapt 1st visual content
44
Send external display request
45
Display 2nd visual content
End

Fig. 5B

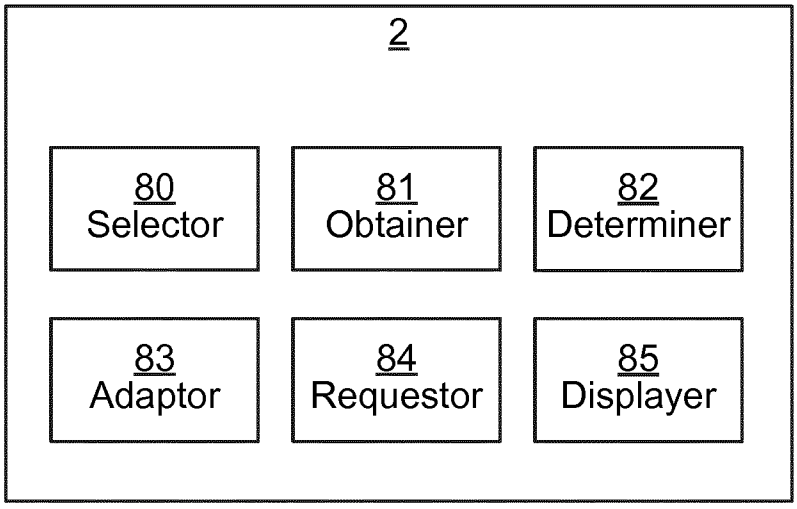
2
80
Selector
81
Obtainer
82
Determiner
83
Adaptor
84
Requestor
85
Displayer

Fig. 6

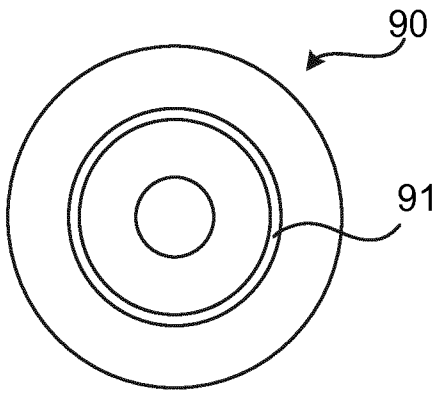
90
91

Fig. 7

INTERNATIONAL SEARCH REPORT

International application No
PCT/EP2016/076425

A. CLASSIFICATION OF SUBJECT MATTER
INV. G06F1/16 H04L29/08 G06F1/32 G02B27/01
ADD.

According to International Patent Classification (IPC) or to both national classification and IPC

B. FIELDS SEARCHED

Minimum documentation searched (classification system followed by classification symbols)
G06F H04L G02B

Documentation searched other than minimum documentation to the extent that such documents are included in the fields searched

Electronic data base consulted during the international search (name of data base and, where practicable, search terms used)
EPO-Internal

C. DOCUMENTS CONSIDERED TO BE RELEVANT

Category*	Citation of document, with indication, where appropriate, of the relevant passages	Relevant to claim No.
X	US 2014/035851 Al (KIM HAK-S00 [KR] ET AL) 6 February 2014 (2014-02-06) paragraphs [0006] , [0031] - [0129] ; f i gures 1-9	1-29
X	EP 2 387 202 Al (LG ELECTRONICS INC [KR]) 16 November 2011 (2011-11-16) paragraphs [0007] - [0151] ; f i gures 1-29	1-29

☐ Further documents are listed in the continuation of Box C.

☒ See patent family annex.

* Special categories of cited documents :

"A" document defining the general state of the art which is not considered to be of particular relevance

"E" earlier application or patent but published on or after the international filing date

"L" documentwhich may throw doubts on priority claim(s) orwhich is cited to establish the publication date of another citation or other special reason (as specified)

"O" document referring to an oral disclosure, use, exhibition or other means

"P" document published prior to the international filing date but later than the priority date claimed

"T" later document published after the international filing date or priority date and not in conflict with the application but cited to understand the principle or theory underlying the invention

"X" document of particular relevance; the claimed invention cannot be considered novel or cannot be considered to involve an inventive step when the document is taken alone

"Y" document of particular relevance; the claimed invention cannot be considered to involve an inventive step when the document is combined with one or more other such documents, such combination being obvious to a person skilled in the art

"&" document member of the same patent family

Date of the actual completion of the international search	Date of mailing of the international search report
30 May 2017	08/06/2017

Name and mailing address of the ISA/	Authorized officer
European Patent Office, P.B. 5818 Patentlaan 2 NL - 2280 HV Rijswijk Tel. (+31-70) 340-2040, Fax: (+31-70) 340-3016	Arranz , Jose

1

INTERNATIONAL SEARCH REPORT

Information on patent family members

International application No
PCT/EP2016/076425

Patent document cited in search report	Publication date	Patent family member(s)	Publication date
US 2014035851 A1	06-02-2014	KR 20140016699 A	10-02-2014
		US 2014035851 A1	06-02-2014
EP 2387202 A1	16-11-2011	CN 102244676 A	16-11-2011
		EP 2387202 A1	16-11-2011
		US 2011283334 A1	17-11-2011