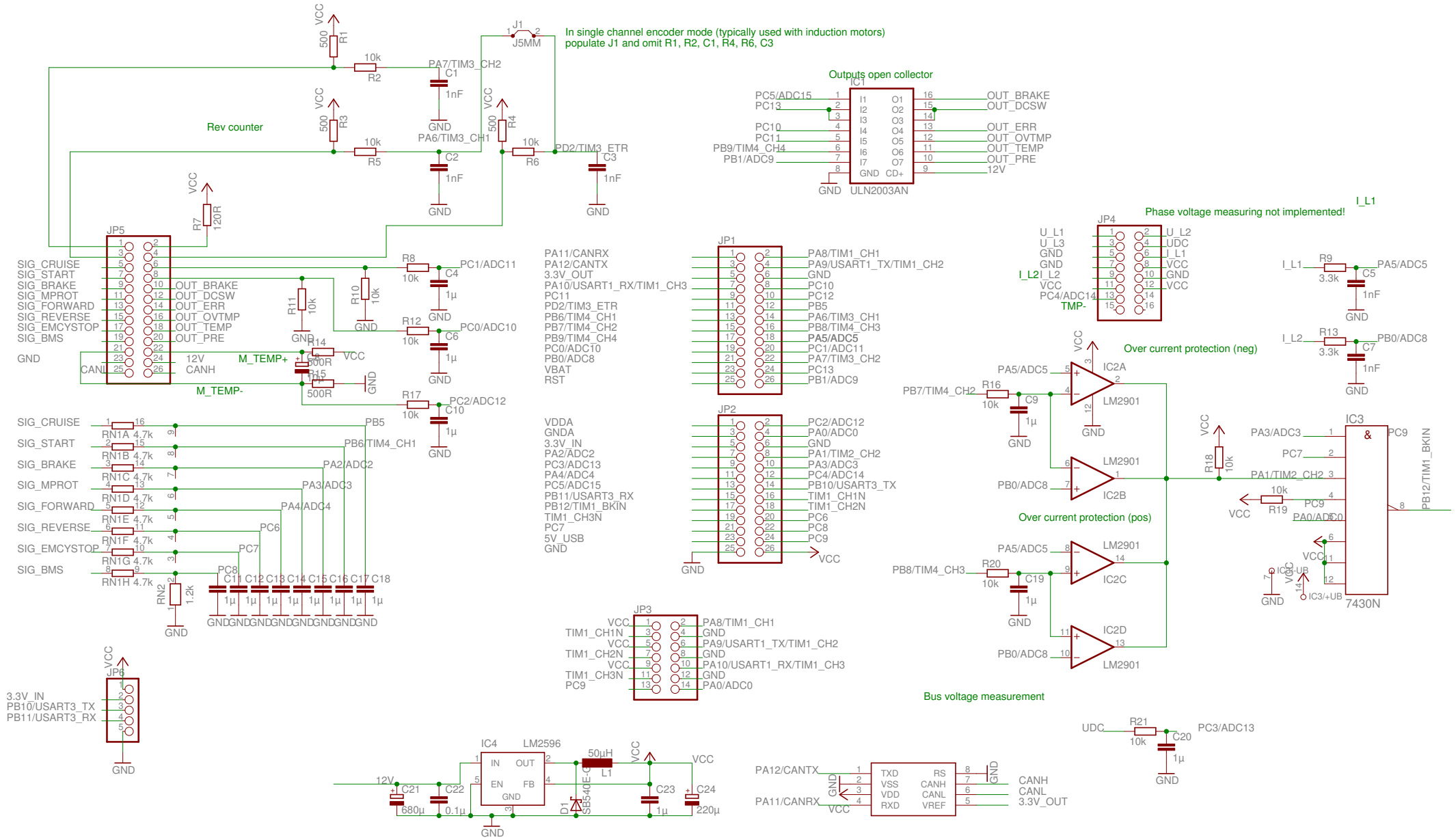
In single channel encoder mode (typically used with induction motors)
populate J1 and omit R1, R2, C1, R4, R6, C3
Rev counter
Outputs open collector
Phase voltage measuring not implemented!
Over current protection (neg)
Over current protection (pos)
Bus voltage measurement
JP5
JP1
JP2
JP3
JP4
JP6
IC1
ULN2003AN
IC2A
IC2B
IC2C
IC2D
LM2901
IC3
7430N
IC4
LM2596
L1
50µH
D1
SB540E-C
RN2
1.2k
M_TEMP+
M_TEMP-
TMP-
I_L1
I_L2
SIG_CRUISE
SIG_START
SIG_BRAKE
SIG_MPROT
SIG_FORWARD
SIG_REVERSE
SIG_EMCYSTOP
SIG_BMS
OUT_BRAKE
OUT_DCSW
OUT_ERR
OUT_OVTMP
OUT_TEMP
OUT_PRE
12V
CANH
CANL
3.3V_IN
PB10/USART3_TX
PB11/USART3_RX
PA12/CANTX
PA11/CANRX
3.3V_OUT
UDC
PC3/ADC13
PB12/TIM1_BKIN