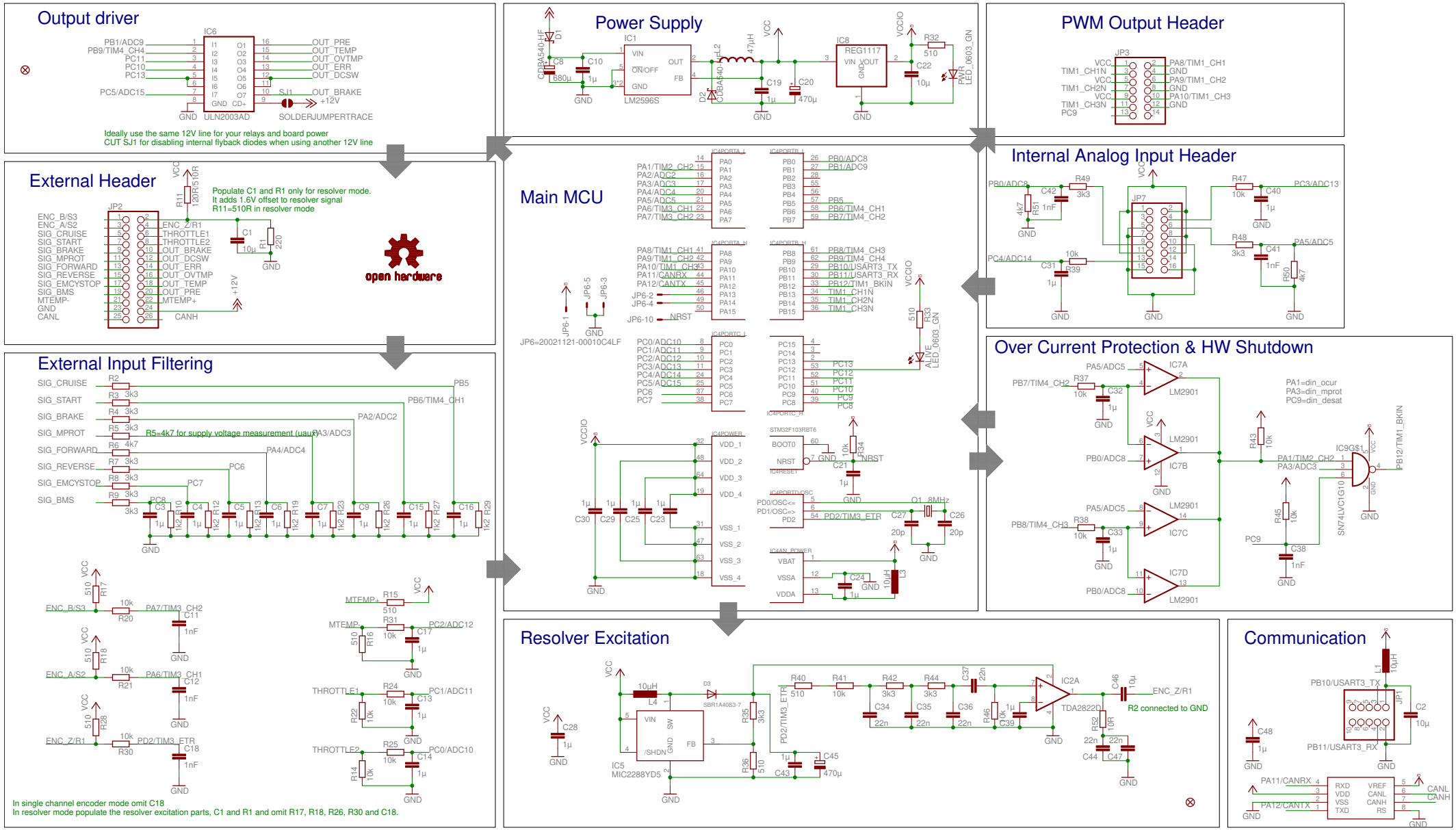
Output driver
IC6
ULN2003AD
PB1/ADC9
PB9/TIM4_CH4
PC11
PC10
PC13
PC5/ADC15
OUT_PRE
OUT_TEMP
OUT_OVTMP
OUT_ERR
OUT_DCSW
OUT_BRAKE
SJ1
+12V
SOLDERJUMPERTRACE
Ideally use the same 12V line for your relays and board power
CUT SJ1 for disabling internal flyback diodes when using another 12V line
Power Supply
IC1
LM2596S
IC8
REG1117
CDBA540-HF
D1
D2
L2
47µH
VCC
VCCIO
R32
510
C22
10µ
PWR
LED_0603_GN
GND
PWM Output Header
JP3
PA8/TIM1_CH1
PA9/TIM1_CH2
PA10/TIM1_CH3
TIM1_CH1N
TIM1_CH2N
TIM1_CH3N
PC9
External Header
JP2
ENC_B/S3
ENC_A/S2
SIG_CRUISE
SIG_START
SIG_BRAKE
SIG_MPROT
SIG_FORWARD
SIG_REVERSE
SIG_EMCYSTOP
SIG_BMS
MTEMP-
CANL
ENC_Z/R1
THROTTLE1
THROTTLE2
OUT_BRAKE
OUT_DCSW
OUT_ERR
OUT_OVTMP
OUT_TEMP
OUT_PRE
MTEMP+
CANH
R11
120R/510R
Populate C1 and R1 only for resolver mode.
It adds 1.6V offset to resolver signal
R11=510R in resolver mode
open hardware
Main MCU
JP6=20021121-00010C4LF
NRST
VCCIO
STM32F103RBT6
Q1 8MHz
PD2/TIM3_ETR
Internal Analog Input Header
JP7
PB0/ADC8
PC4/ADC14
PC3/ADC13
PA5/ADC5
Over Current Protection & HW Shutdown
IC7A
IC7B
IC7C
IC7D
LM2901
PA1=din_ocur
PA3=din_mprot
PC9=din_desat
PB12/TIM1_BKIN
SN74LVC1G10
External Input Filtering
SIG_CRUISE
SIG_START
SIG_BRAKE
SIG_MPROT
SIG_FORWARD
SIG_REVERSE
SIG_EMCYSTOP
SIG_BMS
R5=4k7 for supply voltage measurement (uaux)
PA3/ADC3
PA4/ADC4
PA2/ADC2
PB6/TIM4_CH1
PB5
PC6
PC7
PC8
ENC_B/S3
ENC_A/S2
ENC_Z/R1
PA7/TIM3_CH2
PA6/TIM3_CH1
PD2/TIM3_ETR
MTEMP+
MTEMP-
PC2/ADC12
THROTTLE1
PC1/ADC11
THROTTLE2
PC0/ADC10
In single channel encoder mode omit C18
In resolver mode populate the resolver excitation parts, C1 and R1 and omit R17, R18, R26, R30 and C18.
Resolver Excitation
IC5
MIC2288YD5
SBR1A40S3-7
IC2A
TDA2822D
R2 connected to GND
Communication
PB10/USART3_TX
PB11/USART3_RX
PA11/CANRX
PA12/CANTX
CANL
CANH