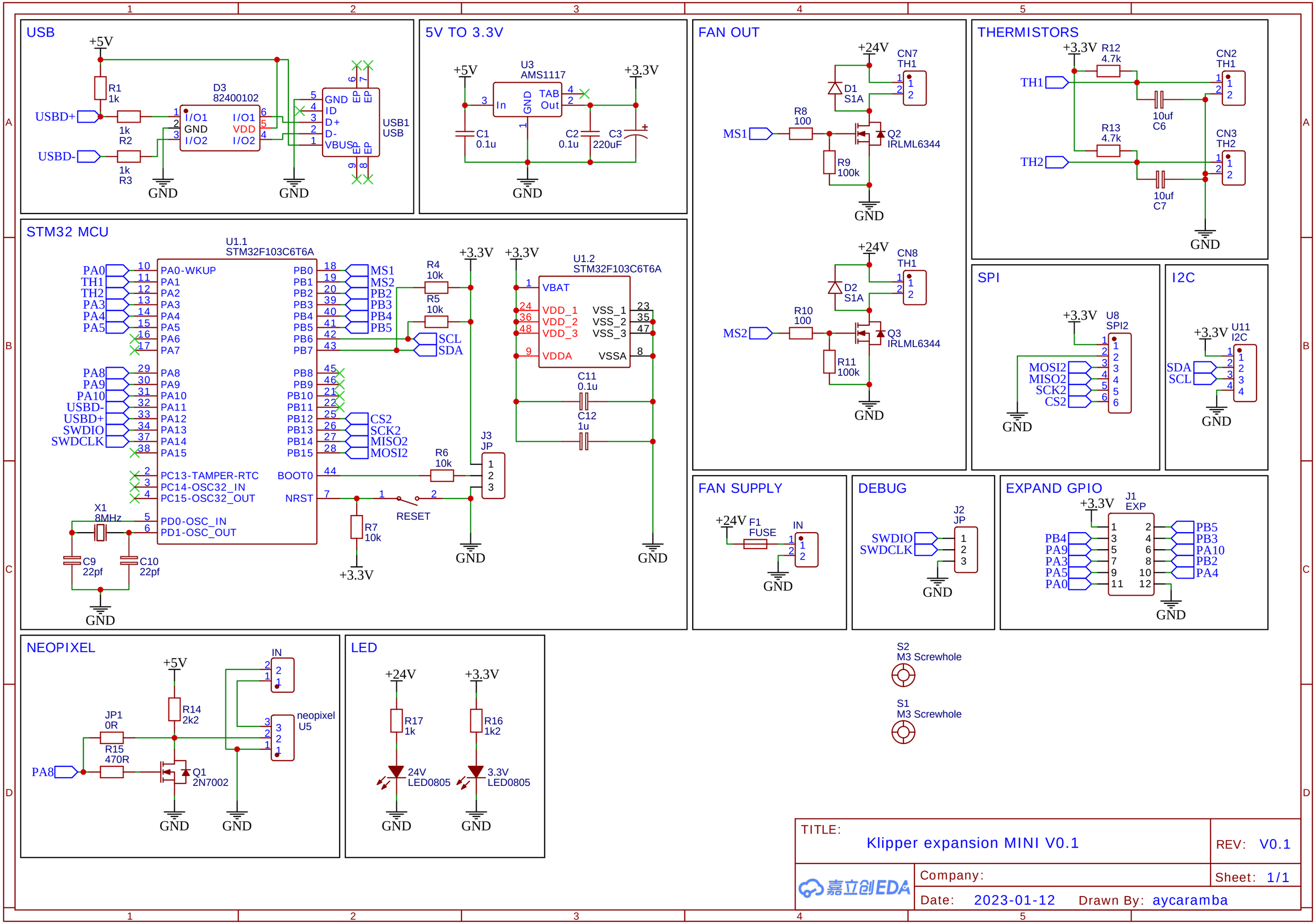
USB
+5V
R1 1k
USBD+
USBD-
1k R2
1k R3
D3 82400102
I/O1 GND I/O2
I/O1 VDD I/O2
GND ID D+ D- VBUS
EP
USB1 USB
GND
5V TO 3.3V
U3 AMS1117
In GND TAB Out
+3.3V
C1 0.1u
C2 0.1u
C3 220uF
FAN OUT
+24V
CN7 TH1
D1 S1A
MS1
R8 100
Q2 IRLML6344
R9 100k
CN8 TH1
D2 S1A
MS2
R10 100
Q3 IRLML6344
R11 100k
THERMISTORS
R12 4.7k
TH1
10uf C6
R13 4.7k
TH2
10uf C7
CN2 TH1
CN3 TH2
STM32 MCU
U1.1 STM32F103C6T6A
PA0-WKUP
PA1
PA2
PA3
PA4
PA5
PA6
PA7
PA8
PA9
PA10
PA11
PA12
PA13
PA14
PA15
PC13-TAMPER-RTC
PC14-OSC32_IN
PC15-OSC32_OUT
PD0-OSC_IN
PD1-OSC_OUT
PB0
PB1
PB2
PB3
PB4
PB5
PB6
PB7
PB8
PB9
PB10
PB11
PB12
PB13
PB14
PB15
BOOT0
NRST
X1 8MHz
C9 22pf
C10 22pf
R4 10k
R5 10k
SCL
SDA
CS2
SCK2
MISO2
MOSI2
R6 10k
J3 JP
R7 10k
RESET
U1.2 STM32F103C6T6A
VBAT
VDD_1
VDD_2
VDD_3
VDDA
VSS_1
VSS_2
VSS_3
VSSA
C11 0.1u
C12 1u
SPI
U8 SPI2
I2C
U11 I2C
FAN SUPPLY
F1 FUSE
IN
DEBUG
J2 JP
SWDIO
SWDCLK
EXPAND GPIO
J1 EXP
NEOPIXEL
JP1 0R
R14 2k2
R15 470R
Q1 2N7002
neopixel U5
LED
R17 1k
R16 1k2
24V LED0805
3.3V LED0805
S2 M3 Screwhole
S1 M3 Screwhole
TITLE:
Klipper expansion MINI V0.1
REV: V0.1
Company:
Sheet: 1/1
Date: 2023-01-12
Drawn By: aycaramba