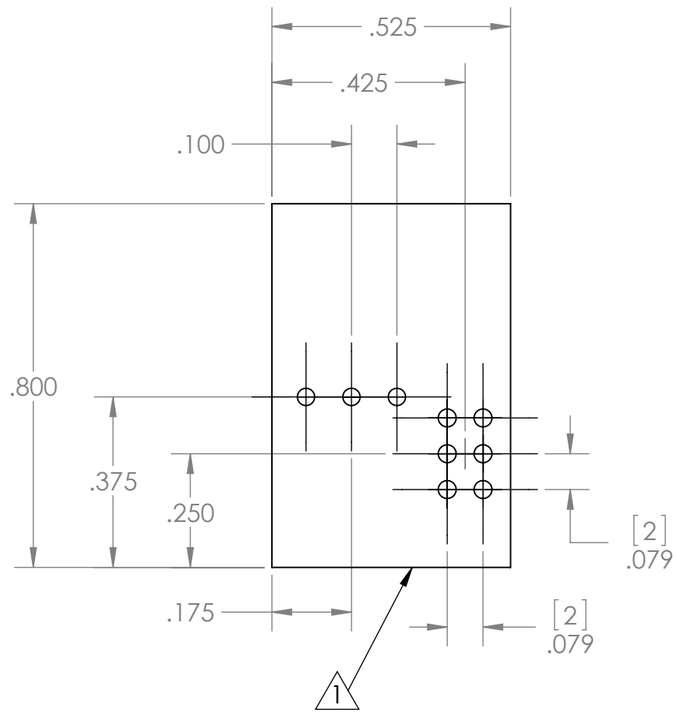

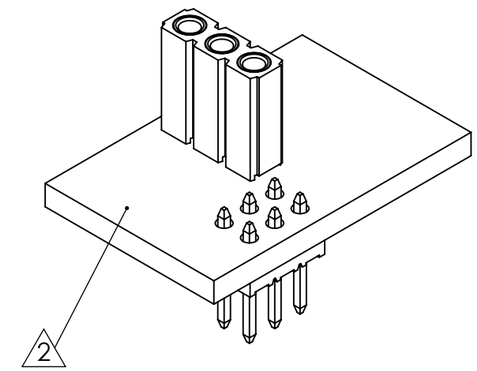

1 FRONT SIDE OF THE DISPLAY

2 PCB THICKNESS : 1.6MM

Benoit Frigon
www.bfrigon.com

NOTES :

PROJECT **ALARM CLOCK V2**			
TITLE **RGB DOTS BASE - PCB DIMENSIONS**			REV **A**
PART # **CLKV2-PC-04**	DOCUMENT # **CLKV2-DWG-06**	UNITS **INCHES [MM]**	SIZE **B**
MATERIAL **PCB FR4 - 1.6 MM**	FINISH **STANDARD**		
DATE 11/25/2015	**APVD BY :**	**SCALE 3:1**	**SHEET 1 OF 1**

FILE : clkv2-dwg-06