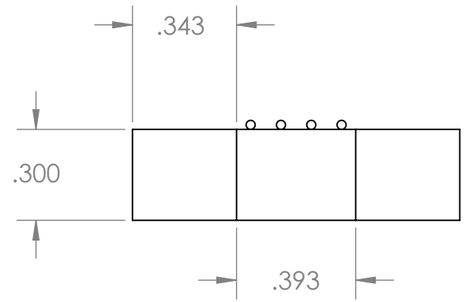

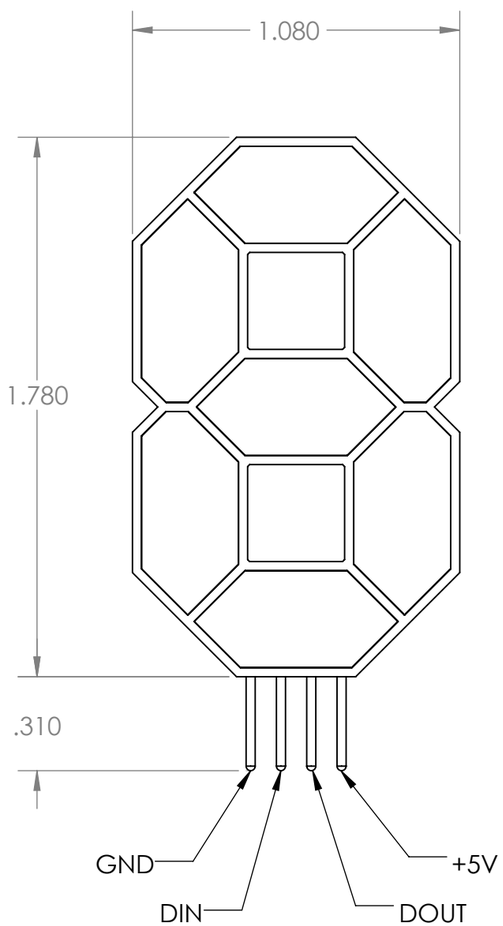

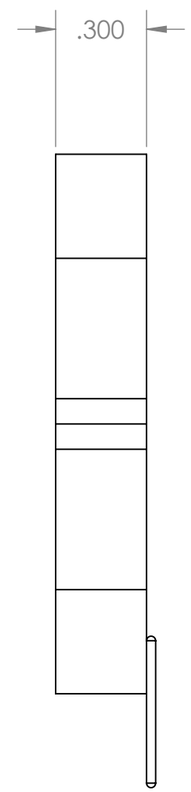

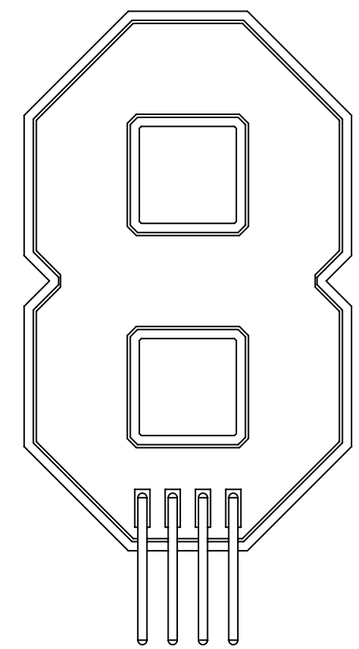

Benoit Frigon
www.bfrigon.com

NOTES :

PROJECT **ALARM CLOCK V2**			
TITLE **RGB SEVEN-SEGMENTS DIGIT ASSEMBLY DIMENSIONS**			REV **A**
PART # **CLKV2-AS-01**	DOCUMENT # **CLKV2-DWG-20**	UNITS **INCHES**	SIZE **B**
MATERIAL **N/A**		FINISH **N/A**	
DATE 11/25/2015	**APVD BY :**	**SCALE 2:1**	**SHEET 1 OF 2**

FILE : clkv2-dwg-20

ITEM NO.	PART NUMBER	DRAWING ID	DESCRIPTION	QTY.
1	CLKV2-PC-01	CLKV2-DWG-01	RGB seven-segments digit PCB	1
2	CLKV2-ML-01	CLKV2-DWG-02	RGB seven-segments diffuser shell	1

DIFFUSER SHELL

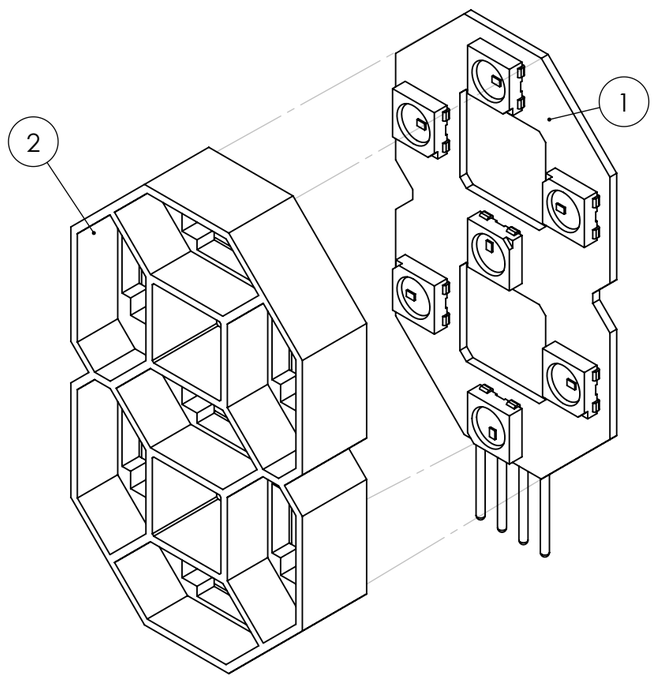

DIFFUSER

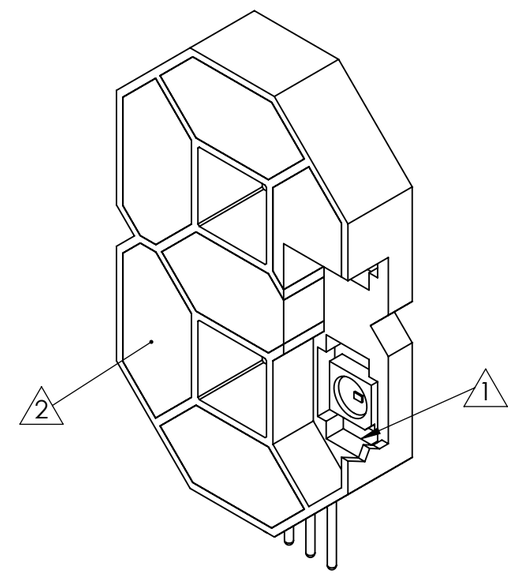

1. PUT SILICON AROUND THE EDGES
2. FILL CAVITY WITH WHITE TRANSLUCENT EPOXY

Benoit Frigon
www.bfrigon.com

NOTES :

PROJECT **ALARM CLOCK V2**			
TITLE **RGB SEVEN-SEGMENTS DIGIT ASSEMBLY ASSEMBLY STEPS**			REV **A**
PART # **CLKV2-AS-01**	DOCUMENT # **CLKV2-DWG-20**	UNITS **INCHES**	SIZE **B**
MATERIAL **N/A**	FINISH **N/A**		
DATE 11/25/2015	**APVD BY :**	**SCALE 2:1**	**SHEET 2 OF 2**

FILE : clkv2-dwg-20