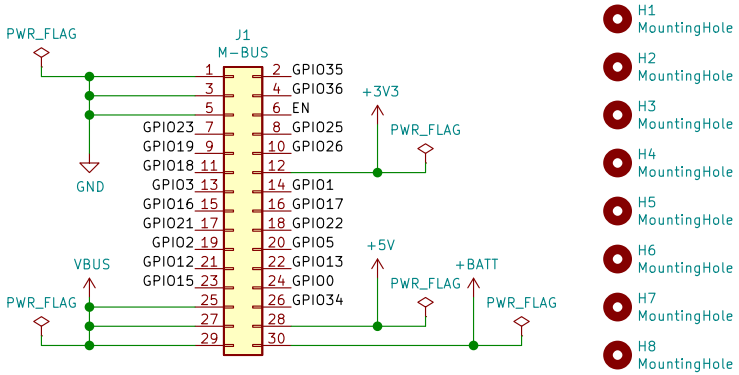

Template of M5Stack Module

Copyright 2021 BotanicFields, Inc.

Sheet: /
File: bf-021.sch

Title: BF-021

Size: A4	Date: 2021-06-10	**Rev: V01L01**
KiCad E.D.A. kicad (5.1.10)-1		Id: 1/1