MIDI Board

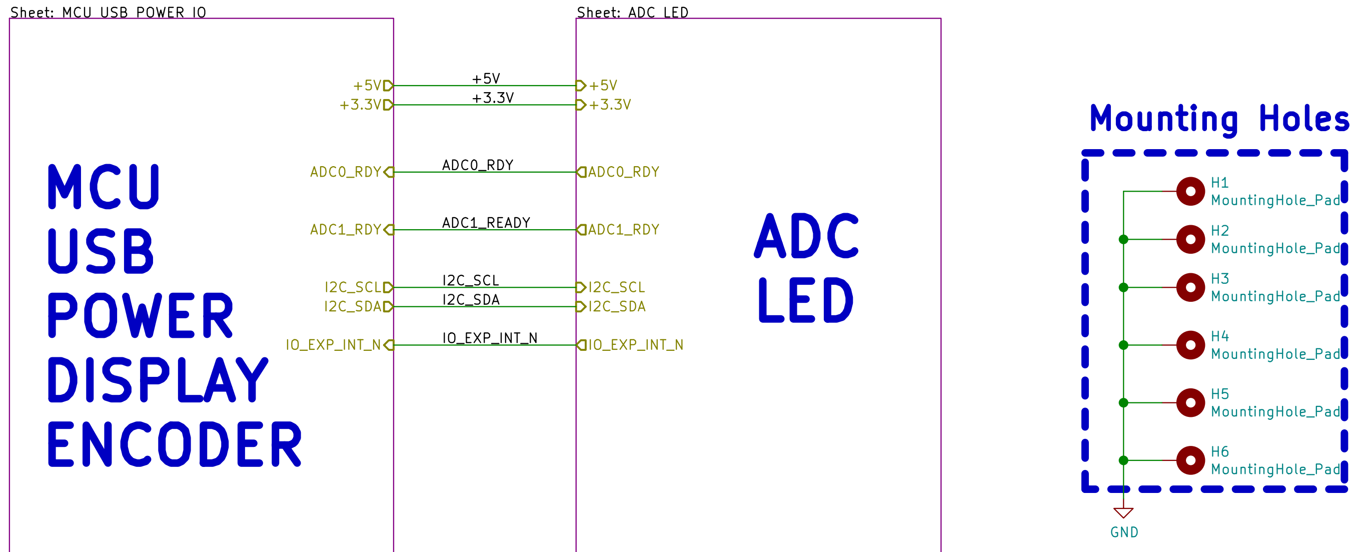
Sheet: MCU_USB_POWER_IO
MCU
USB
POWER
DISPLAY
ENCODER
File: MCU_PWR_IO.sch
Sheet: ADC_LED
ADC
LED
File: ADC.sch
+5V
+3.3V
ADC0_RDY
ADC1_RDY
ADC1_READY
I2C_SCL
I2C_SDA
IO_EXP_INT_N
Mounting Holes
H1
MountingHole_Pad
H2
MountingHole_Pad
H3
MountingHole_Pad
H4
MountingHole_Pad
H5
MountingHole_Pad
H6
MountingHole_Pad
GND

Drawn by: Aravind
Cadsims UK Ltd
Sheet: /
File: LED_Board.sch

Title: Board_TOP

Size: A4	Date: 2021-04-25	**Rev: 0**
KiCad E.D.A. kicad (5.1.9)-1		Id: 1/3

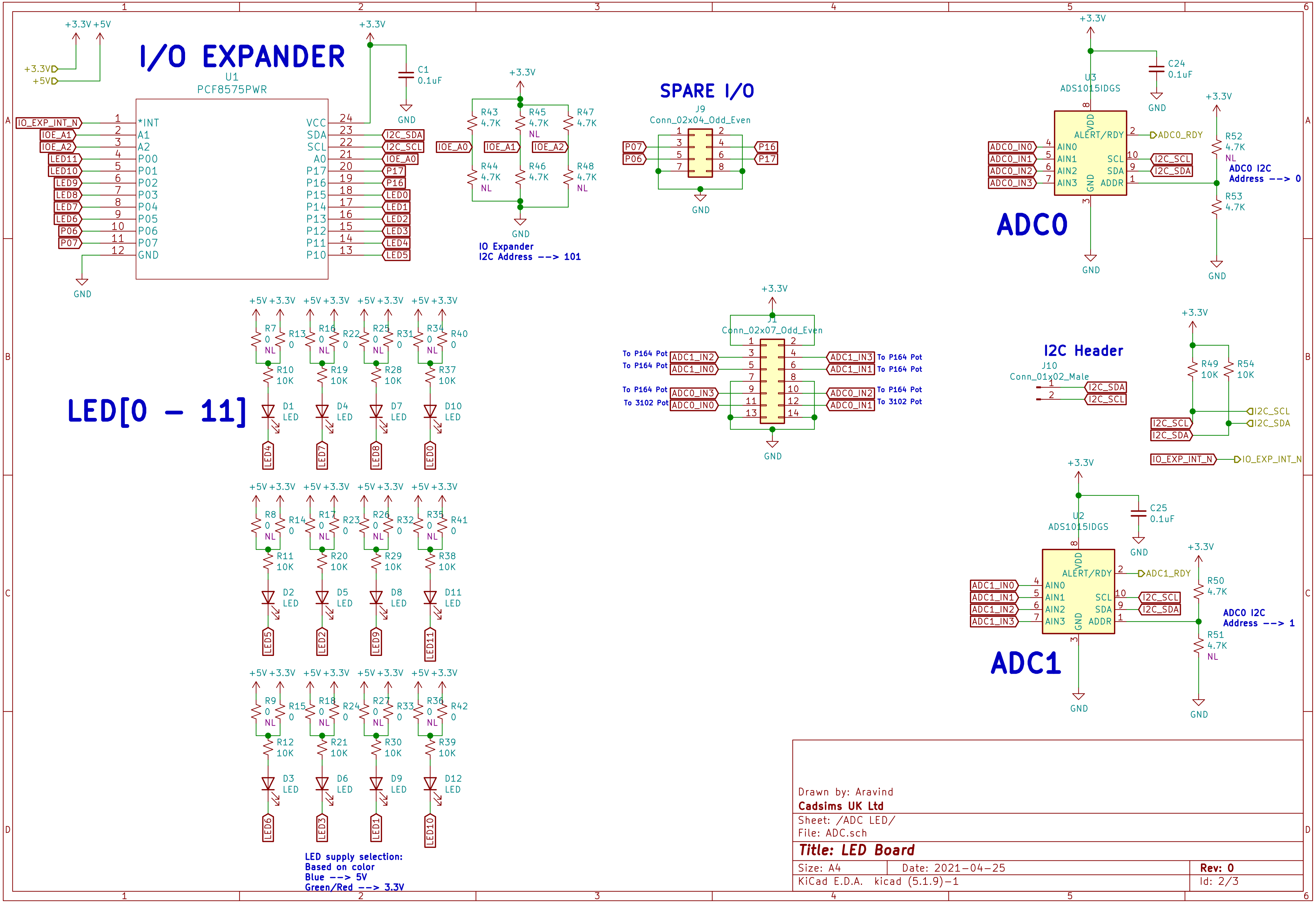
1
2
3
4
5
6
A
B
C
D
+3.3V
+5V
I/O EXPANDER
U1
PCF8575PWR
IO_EXP_INT_N
IOE_A1
IOE_A2
LED11
LED10
LED9
LED8
LED7
LED6
P06
P07
*INT
A1
A2
P00
P01
P02
P03
P04
P05
P06
P07
GND
VCC
SDA
SCL
A0
P17
P16
P15
P14
P13
P12
P11
P10
I2C_SDA
I2C_SCL
IOE_A0
P17
P16
LED0
LED1
LED2
LED3
LED4
LED5
C1
0.1uF
GND
R43 4.7K
R45 4.7K NL
R47 4.7K
R44 4.7K NL
R46 4.7K
R48 4.7K NL
IOE_A0
IOE_A1
IOE_A2
SPARE I/O
J9
Conn_02x04_Odd_Even
P07
P06
P16
P17
ADC0
U3
ADS1015IDGS
C24
0.1uF
VDD
ALERT/RDY
ADC0_RDY
ADC0_IN0
ADC0_IN1
ADC0_IN2
ADC0_IN3
AIN0
AIN1
AIN2
AIN3
SCL
SDA
ADDR
R52 4.7K NL
R53 4.7K
ADC0 I2C
Address --> 0
LED[0 - 11]
R7 0 NL
R13 0
R10 10K
D1 LED
LED4
R16 0 NL
R22 0
R19 10K
D4 LED
LED7
R25 0 NL
R31 0
R28 10K
D7 LED
LED8
R34 0 NL
R40 0
R37 10K
D10 LED
LED0
R8 0 NL
R14 0
R11 10K
D2 LED
LED5
R17 0 NL
R23 0
R20 10K
D5 LED
LED2
R26 0 NL
R32 0
R29 10K
D8 LED
LED9
R35 0 NL
R41 0
R38 10K
D11 LED
LED11
R9 0 NL
R15 0
R12 10K
D3 LED
LED6
R18 0 NL
R24 0
R21 10K
D6 LED
LED3
R27 0 NL
R33 0
R30 10K
D9 LED
LED1
R36 0 NL
R42 0
R39 10K
D12 LED
LED10
J1
Conn_02x07_Odd_Even
To P164 Pot ADC1_IN2
To P164 Pot ADC1_IN0
To P164 Pot ADC0_IN3
To 3102 Pot ADC0_IN0
ADC1_IN3 To P164 Pot
ADC1_IN1 To P164 Pot
ADC0_IN2 To P164 Pot
ADC0_IN1 To 3102 Pot
I2C Header
J10
Conn_01x02_Male
I2C_SDA
I2C_SCL
R49 10K
R54 10K
I2C_SCL
I2C_SDA
IO_EXP_INT_N
ADC1
U2
ADS1015IDGS
C25
0.1uF
ADC1_RDY
ADC1_IN0
ADC1_IN1
ADC1_IN2
ADC1_IN3
R50 4.7K
R51 4.7K NL
ADC0 I2C
Address --> 1

IO Expander
I2C Address --> 101

LED supply selection:
Based on color
Blue --> 5V
Green/Red --> 3.3V

Drawn by: Aravind
Cadsims UK Ltd
Sheet: /ADC LED/
File: ADC.sch

Title: LED Board

Size: A4 Date: 2021-04-25 **Rev: 0**
KiCad E.D.A. kicad (5.1.9)-1 Id: 2/3

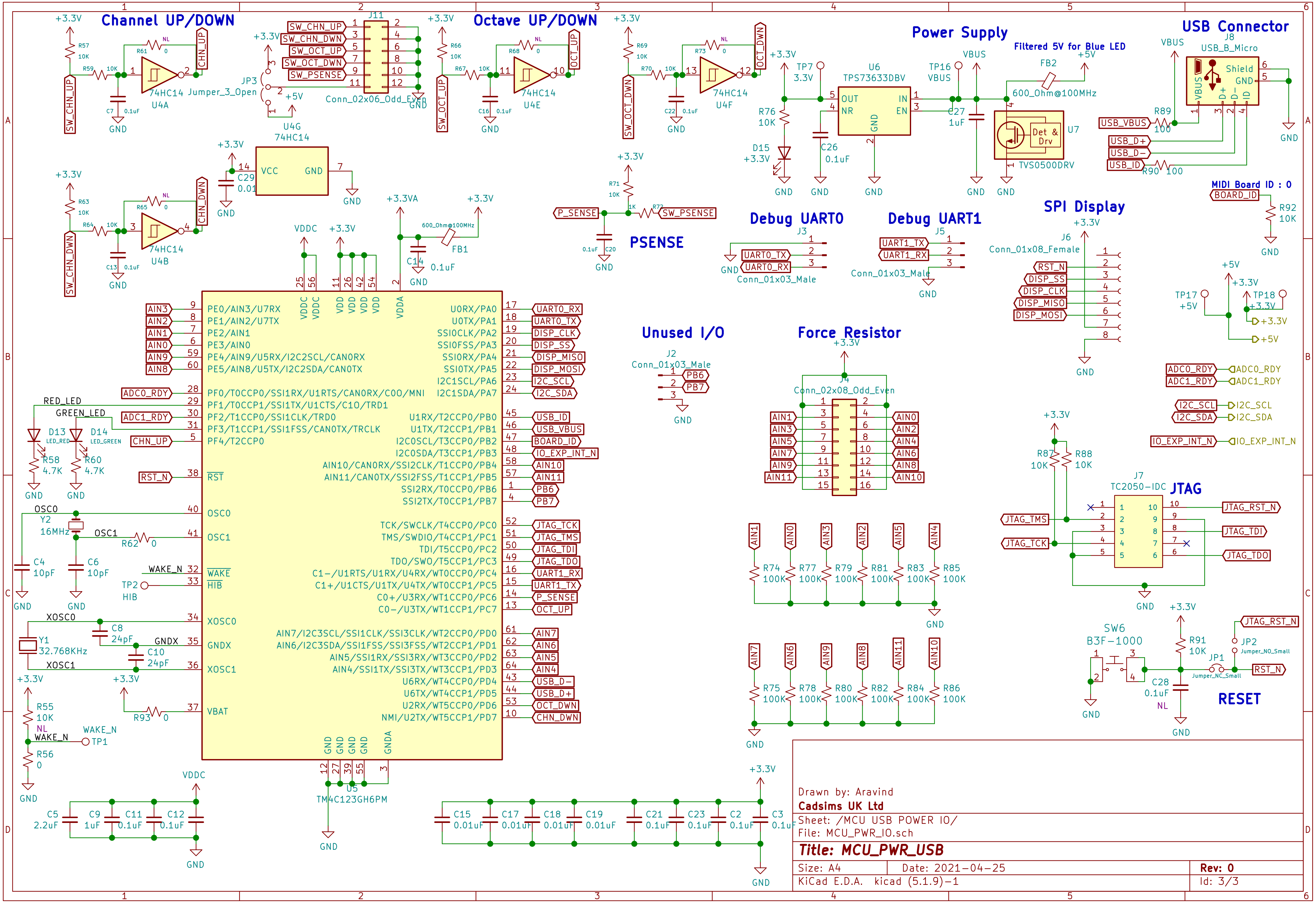
Channel UP/DOWN
Octave UP/DOWN
Power Supply
USB Connector
Filtered 5V for Blue LED
Debug UART0
Debug UART1
SPI Display
PSENSE
Unused I/O
Force Resistor
JTAG
RESET
MIDI Board ID : 0
74HC14
U4A
U4B
U4E
U4F
U4G
Jumper_3_Open
JP3
J11
Conn_02x06_Odd_Even
SW_CHN_UP
SW_CHN_DWN
SW_OCT_UP
SW_OCT_DWN
SW_PSENSE
CHN_UP
CHN_DWN
OCT_UP
OCT_DWN
U6
TPS73633DBV
OUT
NR
IN
EN
TP7
TP16
VBUS
FB2
600_Ohm@100MHz
U7
TVS0500DRV
Det & Drv
J8
USB_B_Micro
Shield
USB_VBUS
USB_D+
USB_D-
USB_ID
J3
J5
Conn_01x03_Male
UART0_TX
UART0_RX
UART1_TX
UART1_RX
J6
Conn_01x08_Female
RST_N
DISP_SS
DISP_CLK
DISP_MISO
DISP_MOSI
BOARD_ID
R92 10K
TP17
TP18
ADC0_RDY
ADC1_RDY
I2C_SCL
I2C_SDA
IO_EXP_INT_N
J2
PB6
PB7
J4
Conn_02x08_Odd_Even
AIN0
AIN1
AIN2
AIN3
AIN4
AIN5
AIN6
AIN7
AIN8
AIN9
AIN10
AIN11
J7
TC2050-IDC
JTAG_TMS
JTAG_TCK
JTAG_RST_N
JTAG_TDI
JTAG_TDO
SW6
B3F-1000
JP1
Jumper_NC_Small
JP2
Jumper_NO_Small
U5
TM4C123GH6PM
PE0/AIN3/U7RX
PE1/AIN2/U7TX
PE2/AIN1
PE3/AIN0
PE4/AIN9/U5RX/I2C2SCL/CAN0RX
PE5/AIN8/U5TX/I2C2SDA/CAN0TX
PF0/T0CCP0/SSI1RX/U1RTS/CAN0RX/C00/NMI
PF1/T0CCP1/SSI1TX/U1CTS/C10/TRD1
PF2/T1CCP0/SSI1CLK/TRD0
PF3/T1CCP1/SSI1FSS/CAN0TX/TRCLK
PF4/T2CCP0
RST
OSC0
OSC1
WAKE
HIB
XOSC0
GNDX
XOSC1
VBAT
U0RX/PA0
U0TX/PA1
SSI0CLK/PA2
SSI0FSS/PA3
SSI0RX/PA4
SSI0TX/PA5
I2C1SCL/PA6
I2C1SDA/PA7
U1RX/T2CCP0/PB0
U1TX/T2CCP1/PB1
I2C0SCL/T3CCP0/PB2
I2C0SDA/T3CCP1/PB3
AIN10/CAN0RX/SSI2CLK/T1CCP0/PB4
AIN11/CAN0TX/SSI2FSS/T1CCP1/PB5
SSI2RX/T0CCP0/PB6
SSI2TX/T0CCP1/PB7
TCK/SWCLK/T4CCP0/PC0
TMS/SWDIO/T4CCP1/PC1
TDI/T5CCP0/PC2
TDO/SWO/T5CCP1/PC3
C1-/U1RTS/U1RX/U4RX/WT0CCP0/PC4
C1+/U1CTS/U1TX/U4TX/WT0CCP1/PC5
C0+/U3RX/WT1CCP0/PC6
C0-/U3TX/WT1CCP1/PC7
AIN7/I2C3SCL/SSI1CLK/WT2CCP0/PD0
AIN6/I2C3SDA/SSI1FSS/SSI3FSS/WT2CCP1/PD1
AIN5/SSI1RX/SSI3RX/WT3CCP0/PD2
AIN4/SSI1TX/SSI3TX/WT3CCP1/PD3
U6RX/WT4CCP0/PD4
U6TX/WT4CCP1/PD5
U2RX/WT5CCP0/PD6
NMI/U2TX/WT5CCP1/PD7
VDDC
VDD
VDDA
GND
GNDA
RED_LED
GREEN_LED
D13 LED_RED
D14 LED_GREEN
Y2 16MHz
Y1 32.768KHz
WAKE_N
TP1
TP2 HIB
FB1 600_Ohm@100MHz
+3.3V
+3.3VA
+5V
GND

Drawn by: Aravind
Cadsims UK Ltd
Sheet: /MCU USB POWER IO/
File: MCU_PWR_IO.sch

Title: MCU_PWR_USB

Size: A4 Date: 2021-04-25 **Rev: 0**
KiCad E.D.A. kicad (5.1.9)-1 Id: 3/3