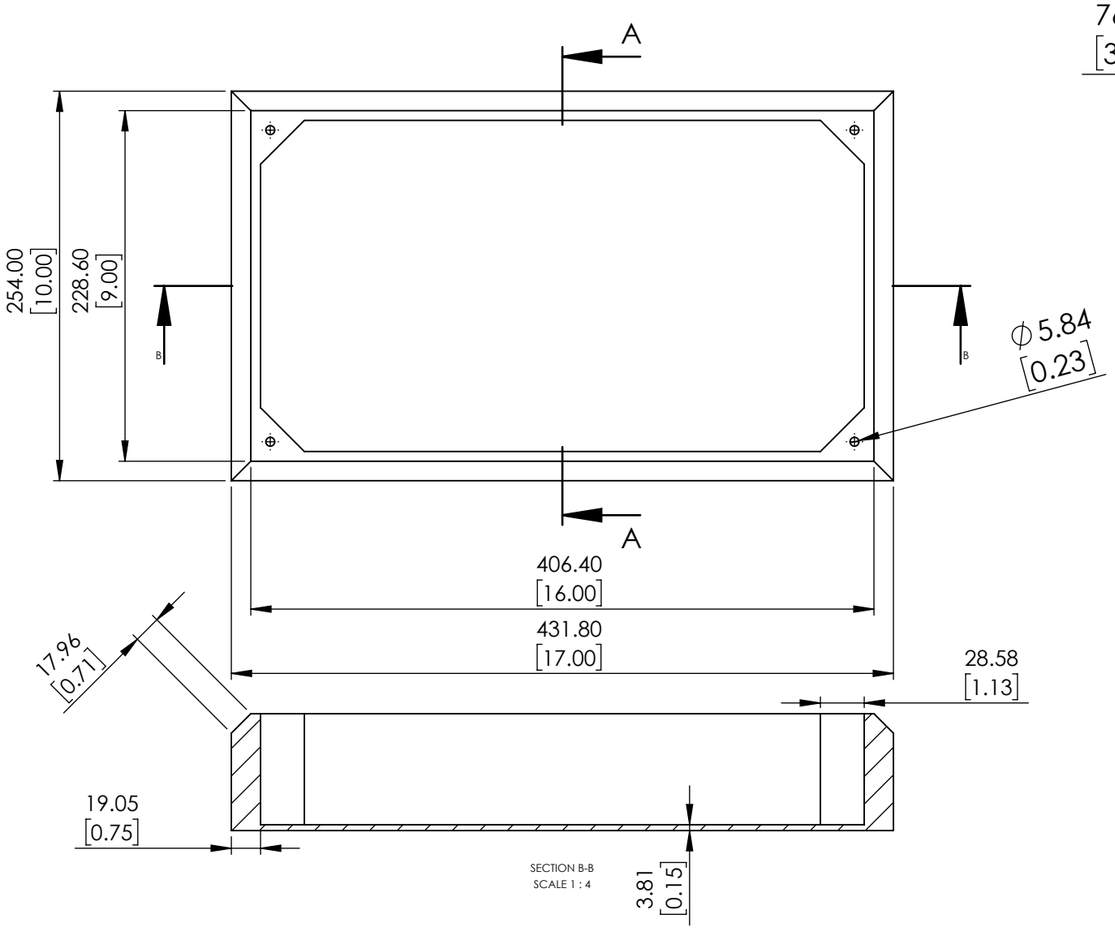

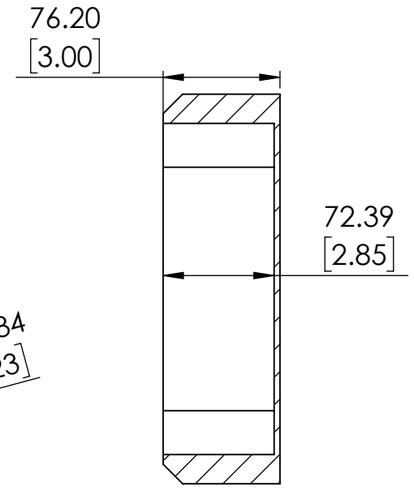

SECTION A-A
SCALE 1 : 4

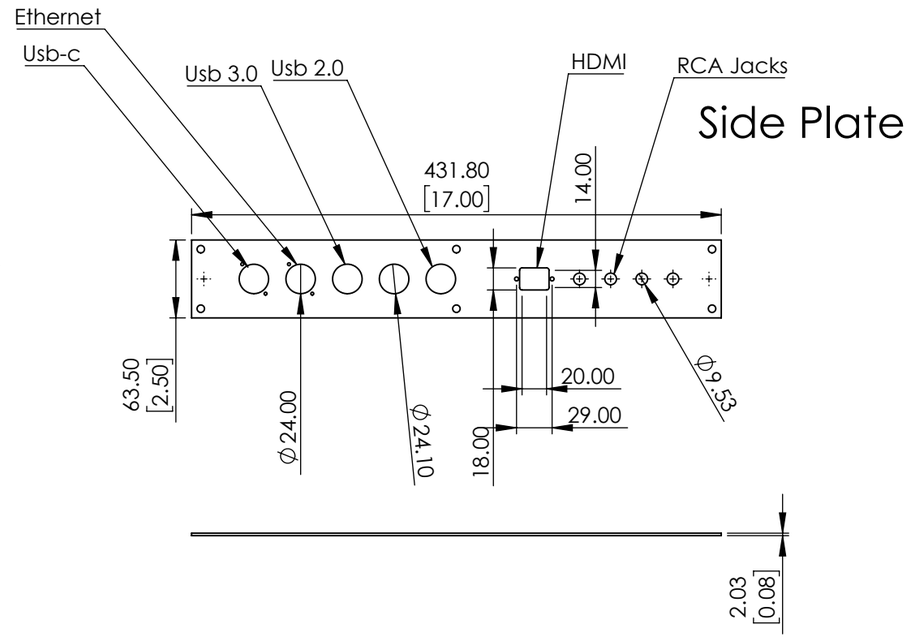

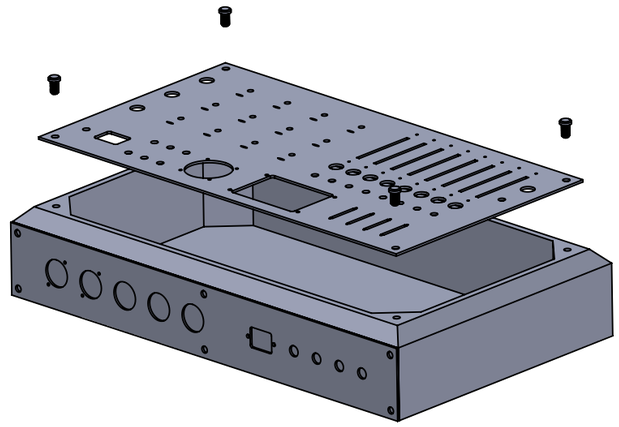

TOP PART

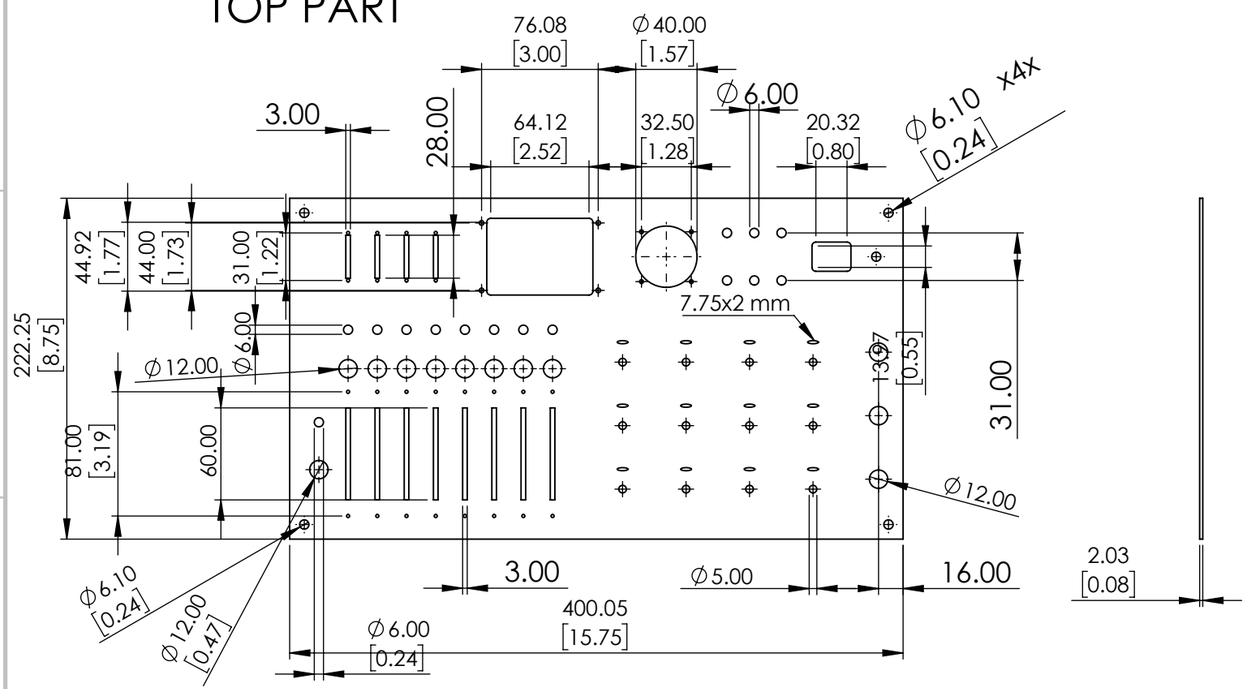

UNLESS OTHERWISE SPECIFIED: DIMENSIONS ARE IN MILLIMETERS SURFACE FINISH: TOLERANCES: LINEAR: ANGULAR:	FINISH:		DEBURR AND BREAK SHARP EDGES	DO NOT SCALE DRAWING		REVISION
	NAME	SIGNATURE	DATE	TITLE:		
DRAWN						
CHK'D						
APPV'D						
MFG						
Q.A			MATERIAL:	DWG NO.		A3
			WEIGHT:	SCALE:1:5	SHEET 1 OF 1	