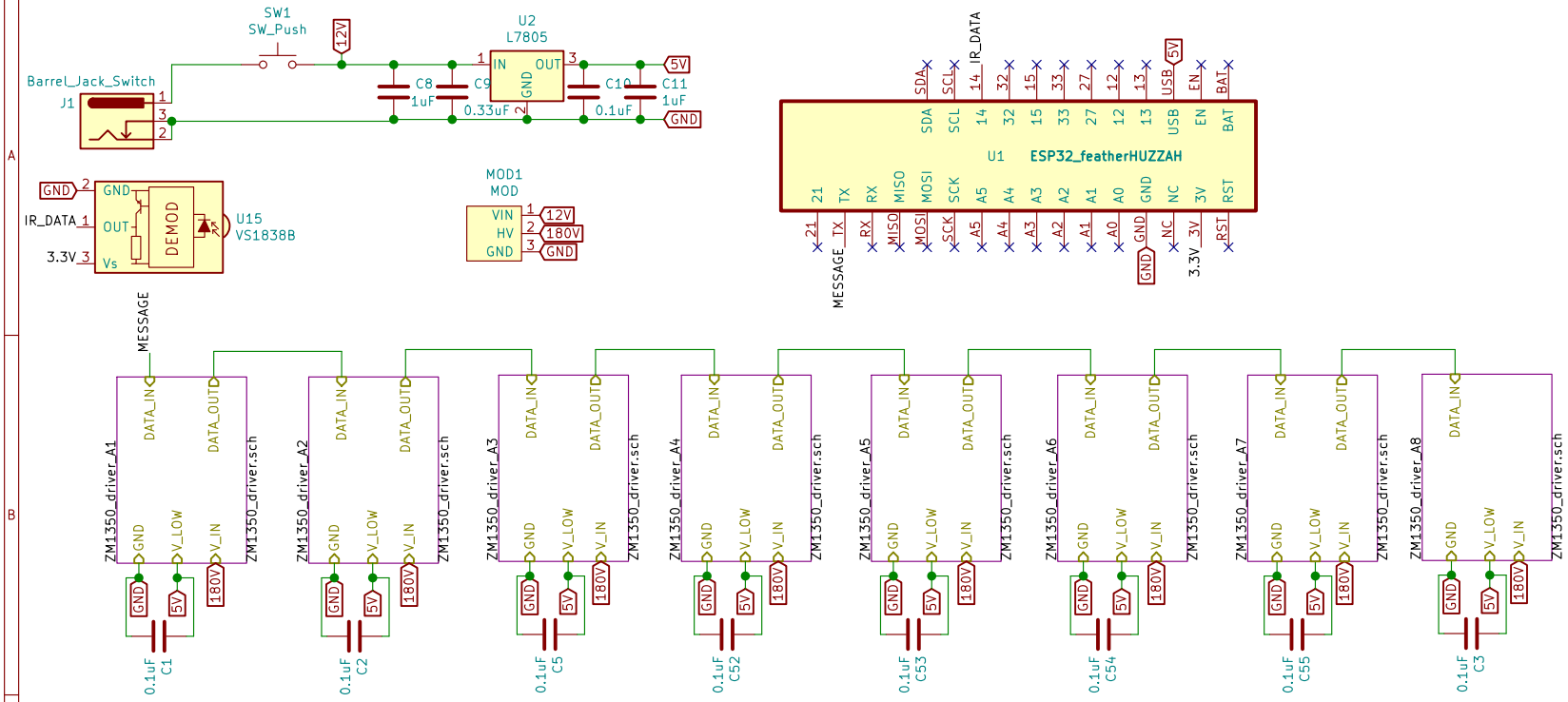

Mahdi Al-Husseini, mahdi07@msn.com

Sheet: /

File: ZM1350-display.sch

Title: ZM1350 Display

Size: A	Date:	Rev: 0.1
KiCad E.D.A. kicad (5.0.2)-1		Id: 1/9