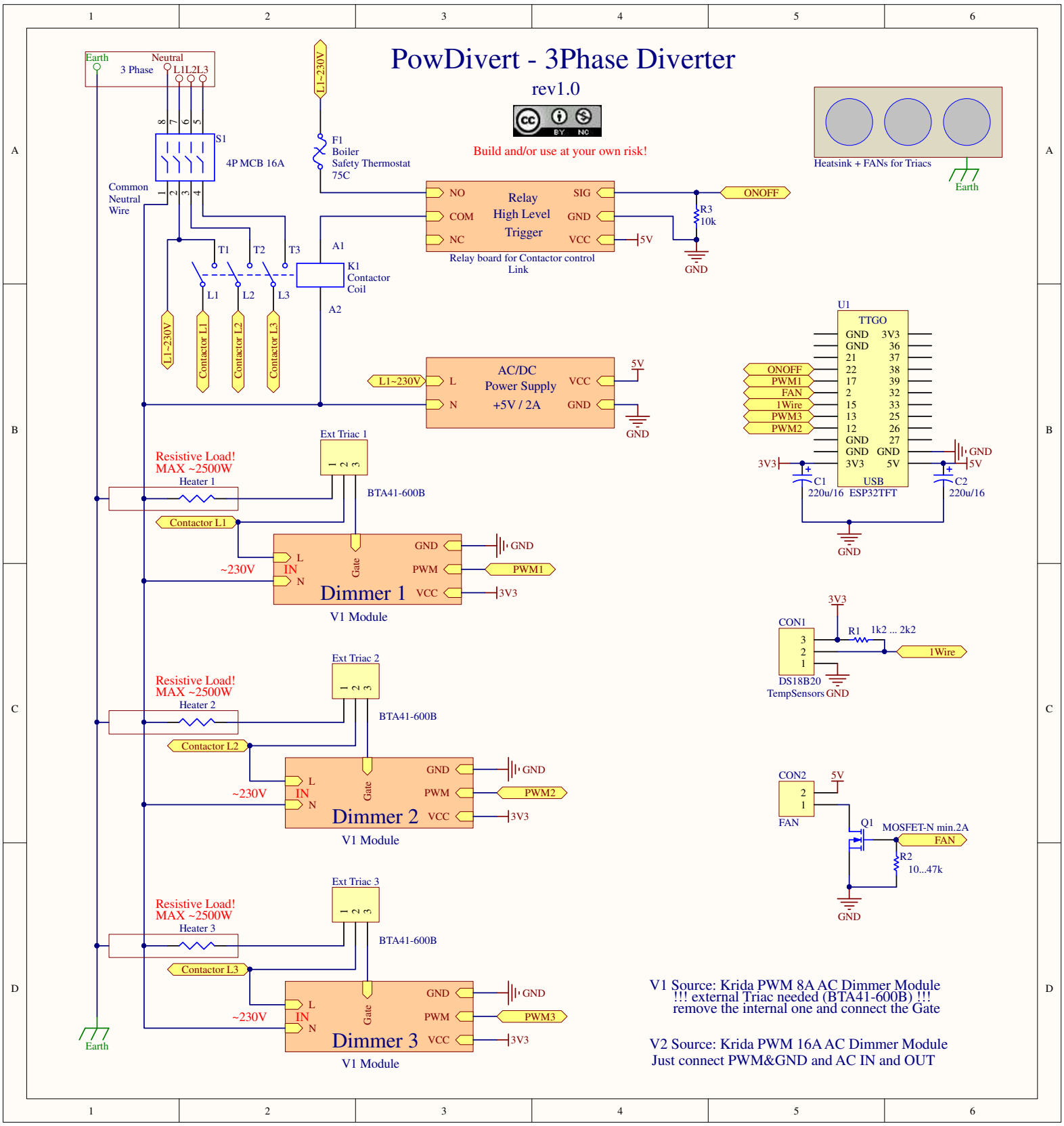
PowDivert - 3Phase Diverter
rev1.0
Build and/or use at your own risk!
Earth
Neutral
3 Phase
L1L2L3
S1
4P MCB 16A
Common
Neutral
Wire
L1~230V
F1
Boiler
Safety Thermostat
75C
Heatsink + FANs for Triacs
Earth
NO
COM
NC
Relay
High Level
Trigger
SIG
GND
VCC
ONOFF
R3
10k
5V
GND
Relay board for Contactor control
Link
T1
T2
T3
A1
A2
K1
Contactor
Coil
L1
L2
L3
Contactor L1
Contactor L2
Contactor L3
AC/DC
Power Supply
+5V / 2A
L
N
VCC
GND
5V
U1
TTGO
GND
3V3
36
37
38
39
32
33
25
26
27
GND
5V
USB
ESP32TFT
ONOFF
PWM1
FAN
1Wire
PWM3
PWM2
C1
220u/16
C2
220u/16
Ext Triac 1
Resistive Load!
MAX ~2500W
Heater 1
BTA41-600B
Contactor L1
~230V
IN
Gate
PWM
Dimmer 1
V1 Module
PWM1
Ext Triac 2
Heater 2
Contactor L2
Dimmer 2
PWM2
Ext Triac 3
Heater 3
Contactor L3
Dimmer 3
PWM3
CON1
DS18B20
TempSensors
R1
1k2 ... 2k2
CON2
FAN
Q1
MOSFET-N min.2A
R2
10...47k
V1 Source: Krida PWM 8A AC Dimmer Module
!!! external Triac needed (BTA41-600B) !!!
remove the internal one and connect the Gate
V2 Source: Krida PWM 16A AC Dimmer Module
Just connect PWM&GND and AC IN and OUT