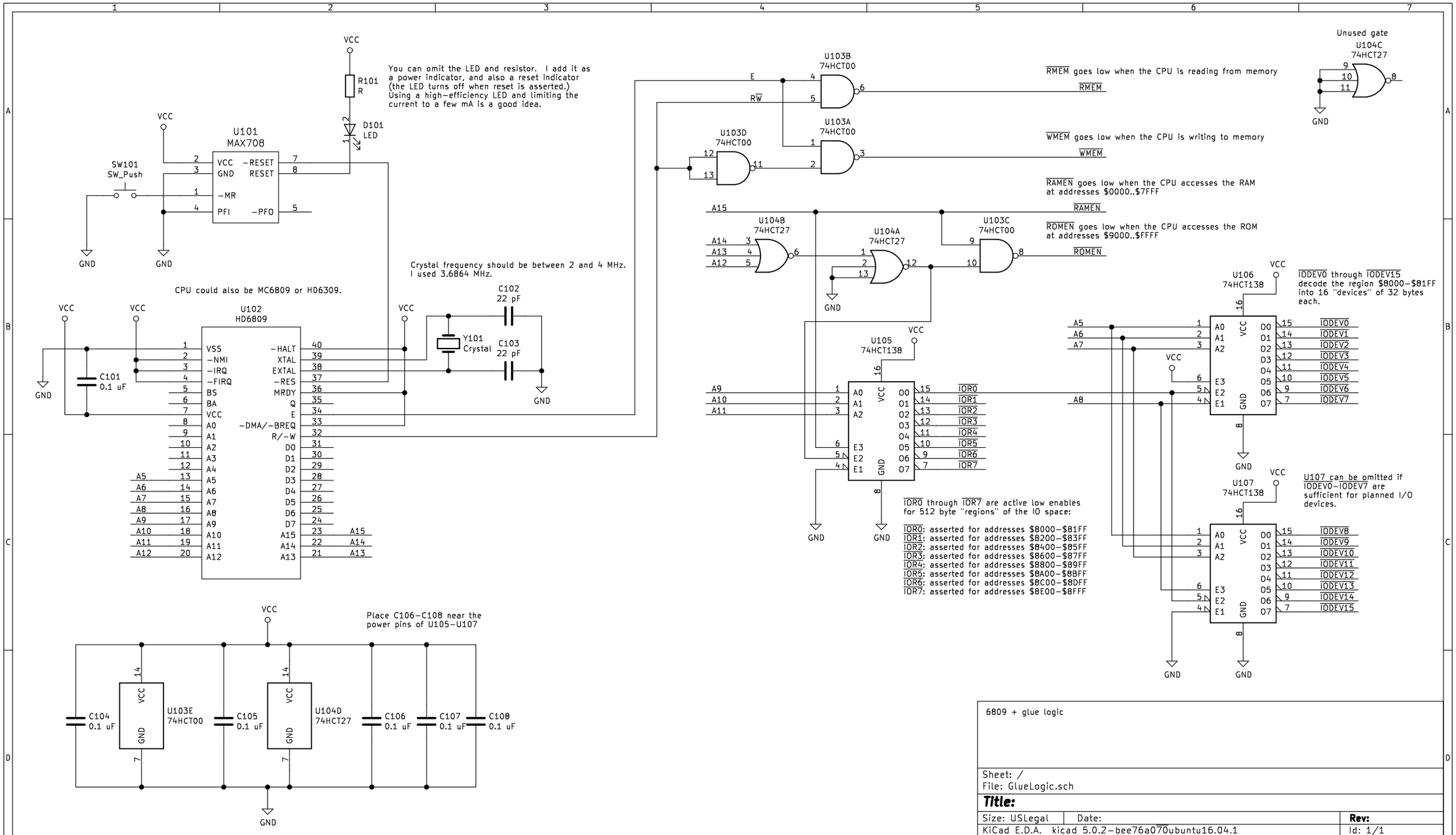
VCC
R101
R
D101
LED
You can omit the LED and resistor. I add it as a power indicator, and also a reset indicator (the LED turns off when reset is asserted.) Using a high-efficiency LED and limiting the current to a few mA is a good idea.
U101
MAX708
VCC
GND
-RESET
RESET
-MR
PFI
-PFO
SW101
SW_Push
GND
GND
CPU could also be MC6809 or HD6309.
U102
HD6809
VSS
-NMI
-IRQ
-FIRQ
BS
BA
VCC
A0
A1
A2
A3
A4
A5
A6
A7
A8
A9
A10
A11
A12
-HALT
XTAL
EXTAL
-RES
MRDY
Q
E
-DMA/-BREQ
R/-W
D0
D1
D2
D3
D4
D5
D6
D7
A15
A14
A13
C101
0.1 uF
GND
Crystal frequency should be between 2 and 4 MHz. I used 3.6864 MHz.
C102
22 pF
Y101
Crystal
C103
22 pF
GND
U103B
74HCT00
U103A
74HCT00
U103D
74HCT00
E
R/W
RMEM goes low when the CPU is reading from memory
RMEM
WMEM goes low when the CPU is writing to memory
WMEM
RAMEN goes low when the CPU accesses the RAM at addresses $0000..$7FFF
RAMEN
ROMEN goes low when the CPU accesses the ROM at addresses $9000..$FFFF
ROMEN
U104B
74HCT27
U104A
74HCT27
U103C
74HCT00
GND
Unused gate
U104C
74HCT27
GND
U105
74HCT138
A9
A10
A11
IOR0
IOR1
IOR2
IOR3
IOR4
IOR5
IOR6
IOR7
IOR0 through IOR7 are active low enables for 512 byte "regions" of the IO space:
IOR0: asserted for addresses $8000-$81FF
IOR1: asserted for addresses $8200-$83FF
IOR2: asserted for addresses $8400-$85FF
IOR3: asserted for addresses $8600-$87FF
IOR4: asserted for addresses $8800-$89FF
IOR5: asserted for addresses $8A00-$8BFF
IOR6: asserted for addresses $8C00-$8DFF
IOR7: asserted for addresses $8E00-$8FFF
U106
74HCT138
IODEV0 through IODEV15 decode the region $8000-$81FF into 16 "devices" of 32 bytes each.
IODEV0
IODEV1
IODEV2
IODEV3
IODEV4
IODEV5
IODEV6
IODEV7
U107
74HCT138
U107 can be omitted if IODEV0-IODEV7 are sufficient for planned I/O devices.
IODEV8
IODEV9
IODEV10
IODEV11
IODEV12
IODEV13
IODEV14
IODEV15
Place C106-C108 near the power pins of U105-U107
C104
0.1 uF
U103E
74HCT00
C105
0.1 uF
U104D
74HCT27
C106
0.1 uF
C107
0.1 uF
C108
0.1 uF
6809 + glue logic
Sheet: /
File: GlueLogic.sch
Title:
Size: USLegal
Date:
Rev:
KiCad E.D.A. kicad 5.0.2-bee76a070ubuntu16.04.1
Id: 1/1