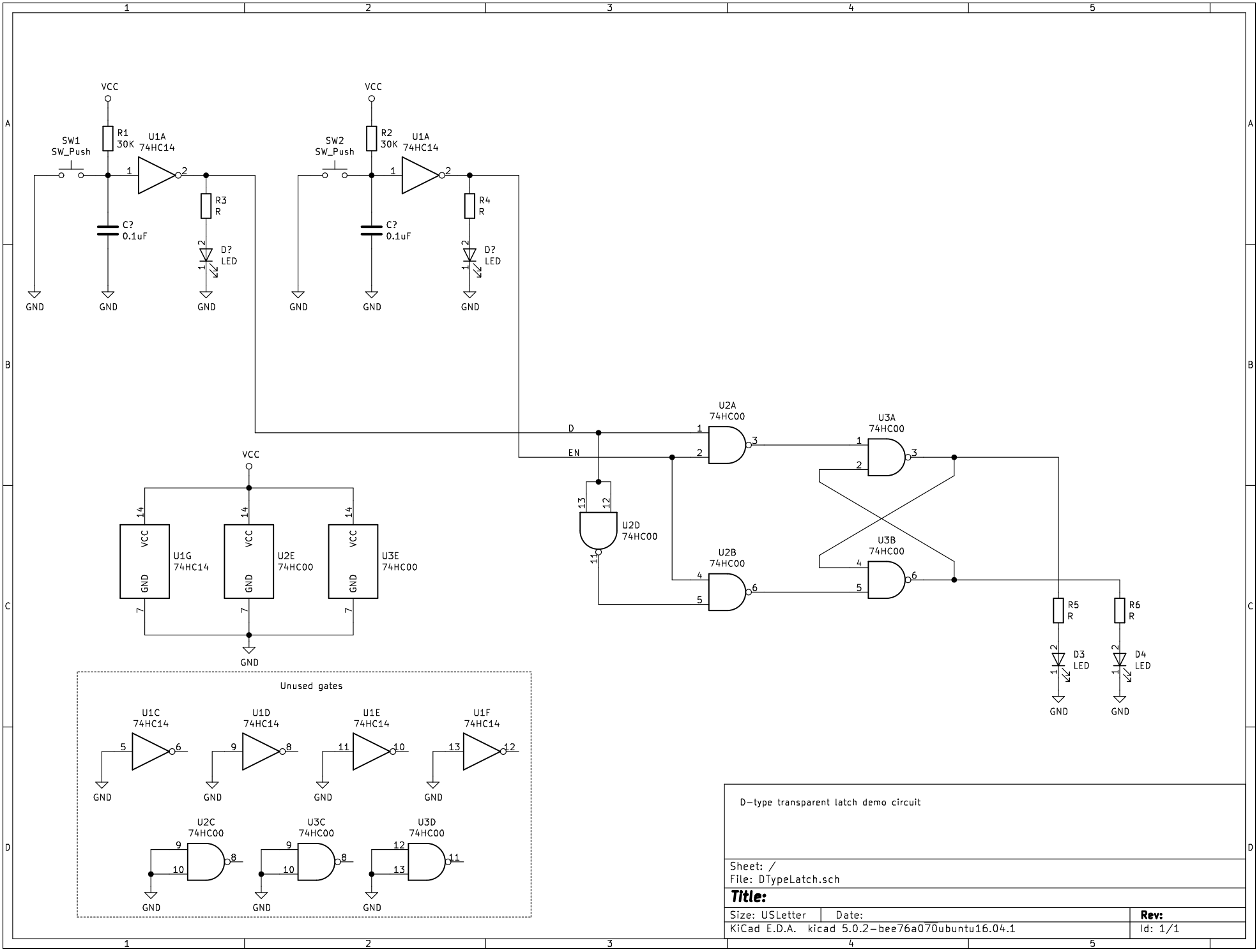
VCC
SW1
SW_Push
R1
30K
U1A
74HC14
C?
0.1uF
R3
R
D?
LED
GND
SW2
SW_Push
R2
30K
R4
R
D
EN
U2A
74HC00
U2B
74HC00
U2D
74HC00
U3A
74HC00
U3B
74HC00
U1G
74HC14
U2E
74HC00
U3E
74HC00
R5
R
R6
R
D3
LED
D4
LED
Unused gates
U1C
74HC14
U1D
74HC14
U1E
74HC14
U1F
74HC14
U2C
74HC00
U3C
74HC00
U3D
74HC00
D-type transparent latch demo circuit
Sheet: /
File: DTypeLatch.sch
Title:
Size: USLetter
Date:
Rev:
KiCad E.D.A. kicad 5.0.2-bee76a070ubuntu16.04.1
Id: 1/1