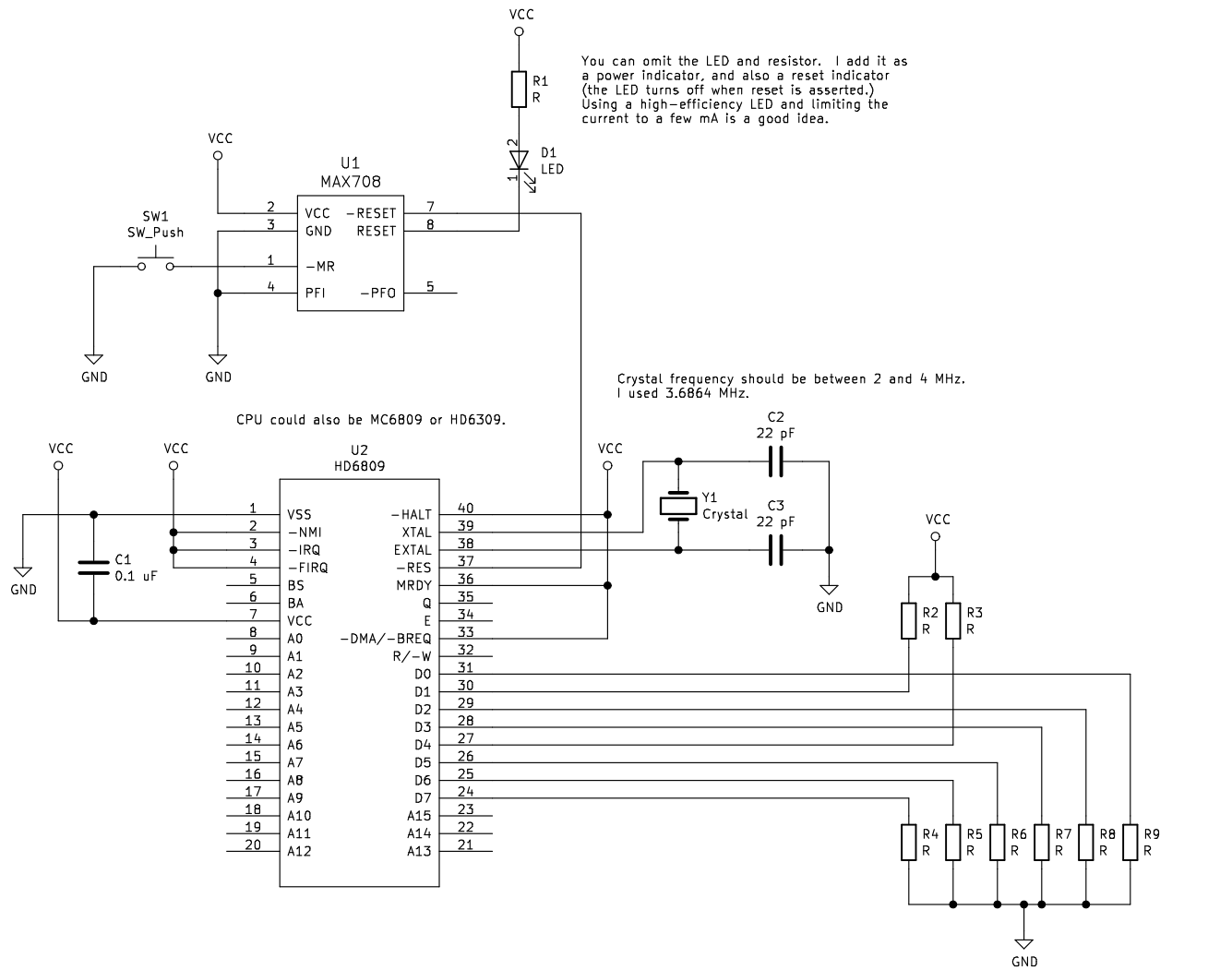

You can omit the LED and resistor. I add it as a power indicator, and also a reset indicator (the LED turns off when reset is asserted.) Using a high-efficiency LED and limiting the current to a few mA is a good idea.

Crystal frequency should be between 2 and 4 MHz. I used 3.6864 MHz.

CPU could also be MC6809 or HD6309.

Make all of the pull-up/pull-down resistors connected to the data bus (D0..D7) fairly large, e.g., 4.7K. The resistors cause the CPU to read the value 0x12 when an instruction is fetched. 0x12 is the opcode of the NOP instruction.

6809 freerun circuit

Sheet: /
File: Freerun.sch

Title:

Size: USLetter	Date:	**Rev:**
KiCad E.D.A. kicad 5.0.2-bee76a070ubuntu16.04.1		Id: 1/1