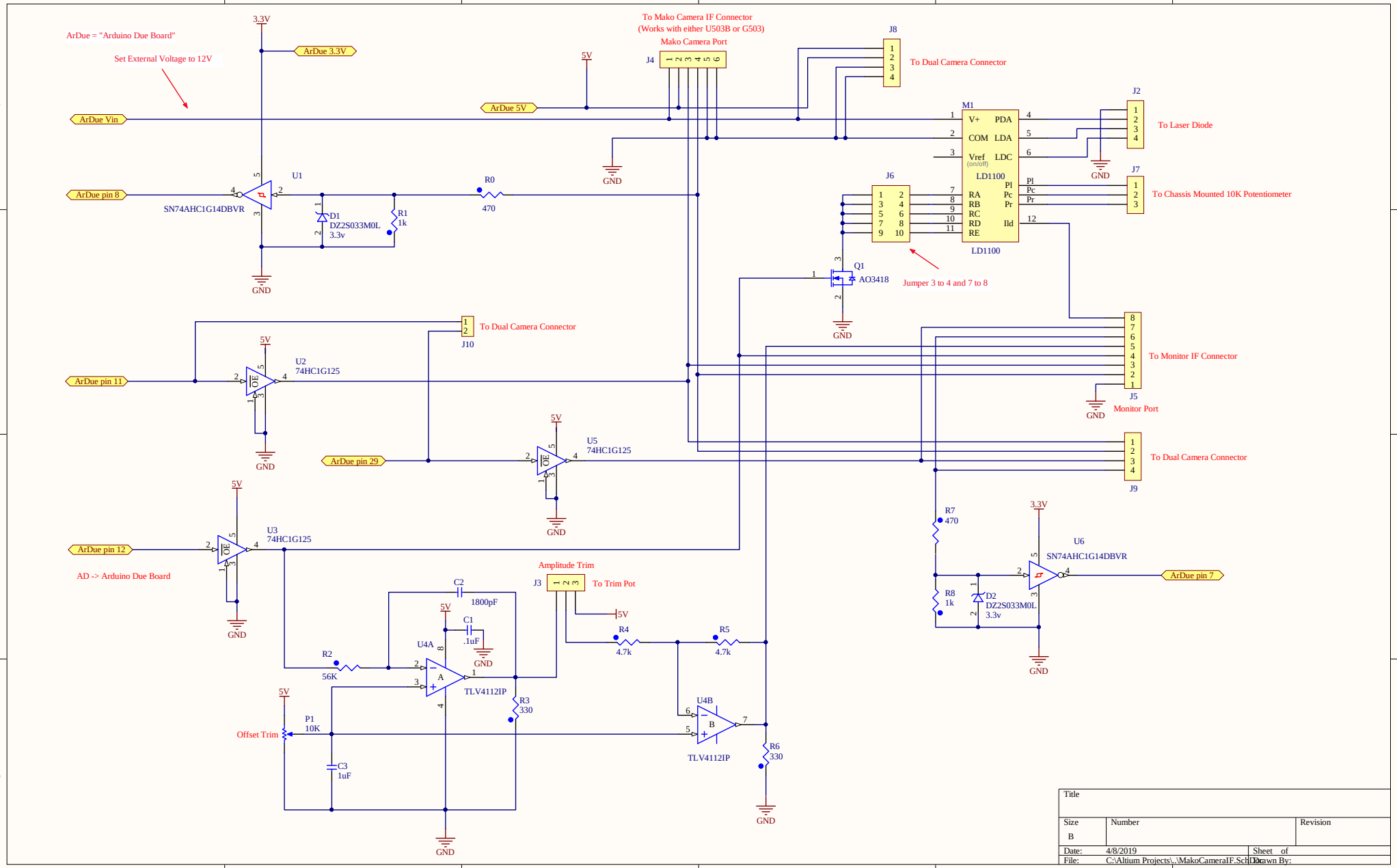
ArDue = "Arduino Due Board"
Set External Voltage to 12V
3.3V
ArDue 3.3V
ArDue Vin
ArDue 5V
5V
To Mako Camera IF Connector
(Works with either U503B or G503)
Mako Camera Port
J4
J8
To Dual Camera Connector
M1
V+
PDA
COM
LDA
Vref
(on/off)
LDC
LD1100
RA
RB
RC
RD
RE
Pl
Pc
Pr
Ild
J2
To Laser Diode
J7
To Chassis Mounted 10K Potentiometer
J6
Jumper 3 to 4 and 7 to 8
Q1
AO3418
GND
ArDue pin 8
U1
SN74AHC1G14DBVR
D1
DZ2S033M0L
3.3v
R1
1k
R0
470
ArDue pin 11
U2
74HC1G125
OE
J10
To Dual Camera Connector
To Monitor IF Connector
J5
Monitor Port
ArDue pin 29
U5
74HC1G125
J9
To Dual Camera Connector
ArDue pin 12
AD -> Arduino Due Board
U3
74HC1G125
R7
470
R8
1k
D2
DZ2S033M0L
3.3v
U6
SN74AHC1G14DBVR
ArDue pin 7
Amplitude Trim
J3
To Trim Pot
C2
1800pF
C1
.1uF
U4A
A
TLV4112IP
R2
56K
R3
330
R4
4.7k
R5
4.7k
U4B
B
TLV4112IP
R6
330
Offset Trim
P1
10K
C3
1uF
Title
Size
B
Number
Revision
Date:
4/8/2019
Sheet of
File:
C:\Altium Projects\...\MakoCameraIF.SchDoc
Drawn By: