REVISIONS				
ZONE	REV.	DESCRIPTION	DATE	APPROVED
-	-	RELEASE	7/30/2018	REDACTED

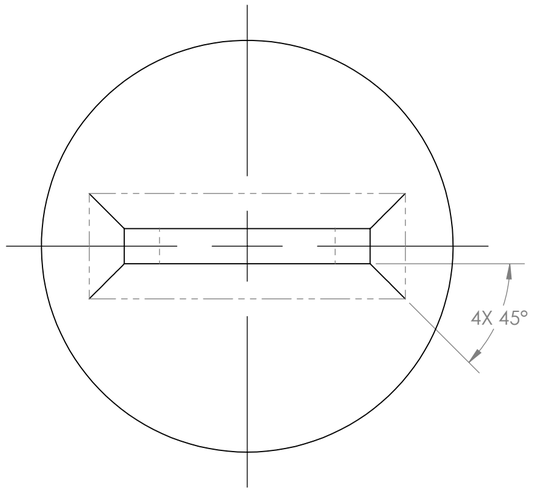

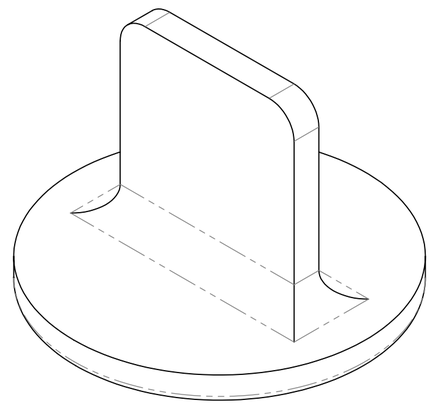

FOR REFERENCE ONLY

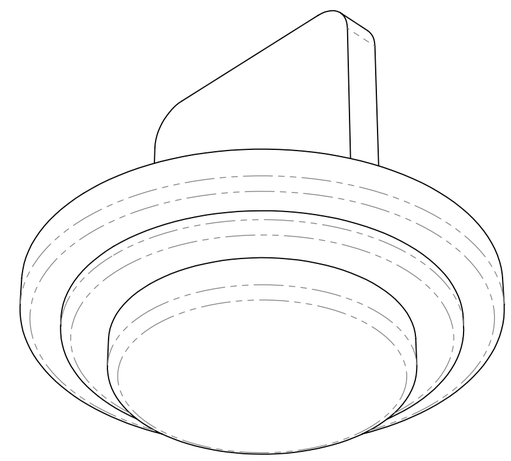

FOR REFERENCE ONLY

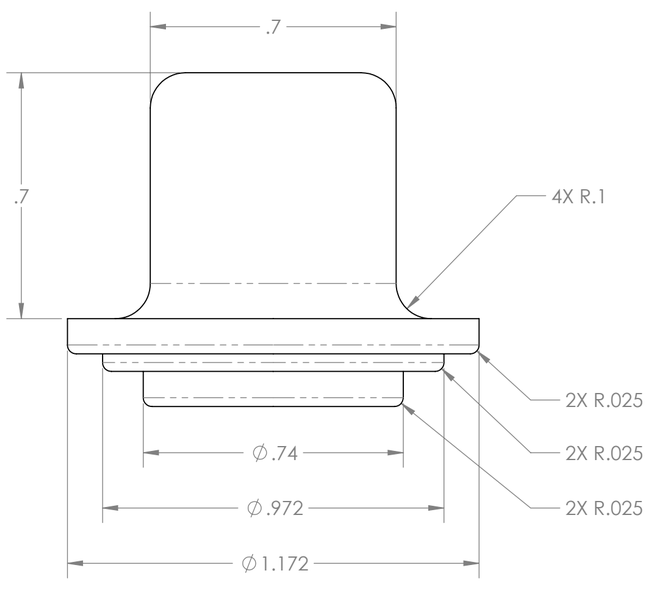

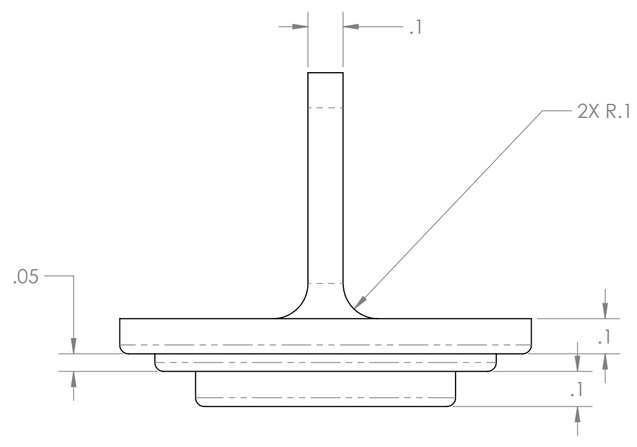

THIS DOCUMENT CONTAINS INFORMATION WHICH IS PROPRIETARY TO REDACTED, INC. ACCORDINGLY, THE INFORMATION IN THIS DOCUMENT SHALL NOT BE DUPLICATED, USED OR DISCLOSED — IN WHOLE OR IN PART — FOR ANY PURPOSE OTHER THAN TO EVALUATE THIS INFORMATION. SHOULD A CONTRACT BE AWARDED TO REDACTED, INC. AS A RESULT OF, OR IN CONNECTION WITH, THE SUBMISSION OF THIS DATA, THE CUSTOMER SHALL HAVE THE RIGHT TO DUPLICATE, USE OR DISCLOSE THE DATA TO THE EXTENT PROVIDED IN THE RESULTING CONTRACT. THIS RESTRICTION DOES NOT LIMIT THE CUSOMER'S RIGHT TO USE INFORMATION CONTAINED IN THIS DOCUMENT IF IT IS OBTAINED FROM ANOTHER SOURCE WITHOUT RESTRICTION. THE DATA SUBJECT TO THIS RESTRICTION ARE CONTAINED IN ALL SHEETS OF THIS DOCUMENT.

NEXT ASSY | USED ON

COATING

THIRD ANGLE PROJECTION

DO NOT SCALE DRAWING

UNLESS OTHERWISE SPECIFIED
DIMENSIONS ARE IN INCHES:
TOLERANCES ON ANGLE: ±.5°
1 PL ±.1, 2 PL ±.02, 3 PL ±.005
FRACTIONS: ±1/64
INDUSTRY STANDARD TOLERANCES APPLY FOR GAUGE, TUBING, AND BAR STOCK.
ELSE INTERPRET DIM AND TOL PER: IPC-D-300 (TAKES PRECEDENCE), THEN ASME Y14.5-2009.

DRAWN BY L. DiBeneditto	DATE 7/27/2018	REDACTED LOGO
CHECKED BY REDACTED	DATE 7/30/2018	REDACTED ADDRESS
ENG. APPROVED BY REDACTED	DATE 7/30/2018	DWG NO. & FILE NAME
APPROVED BY	DATE	**REDACTED-REV-R3C-PCB-H1-TO-H4-LARGE-HOLES-COATING-COVER-V2**
KE CUSTOMER NAME REDACTED		
KE PARENT NO. REDACTED		SIZE **C** / DESCRIPTION CONFORMAL COATING COVER FOR PCB HOLES H1 TO H4 / REV
KE SHOP ORDER REDACTED		
KE TCM PART NO. N/A		SCALE 3:1 / CAGE NO. REDACTED / SHEET 1 OF 1