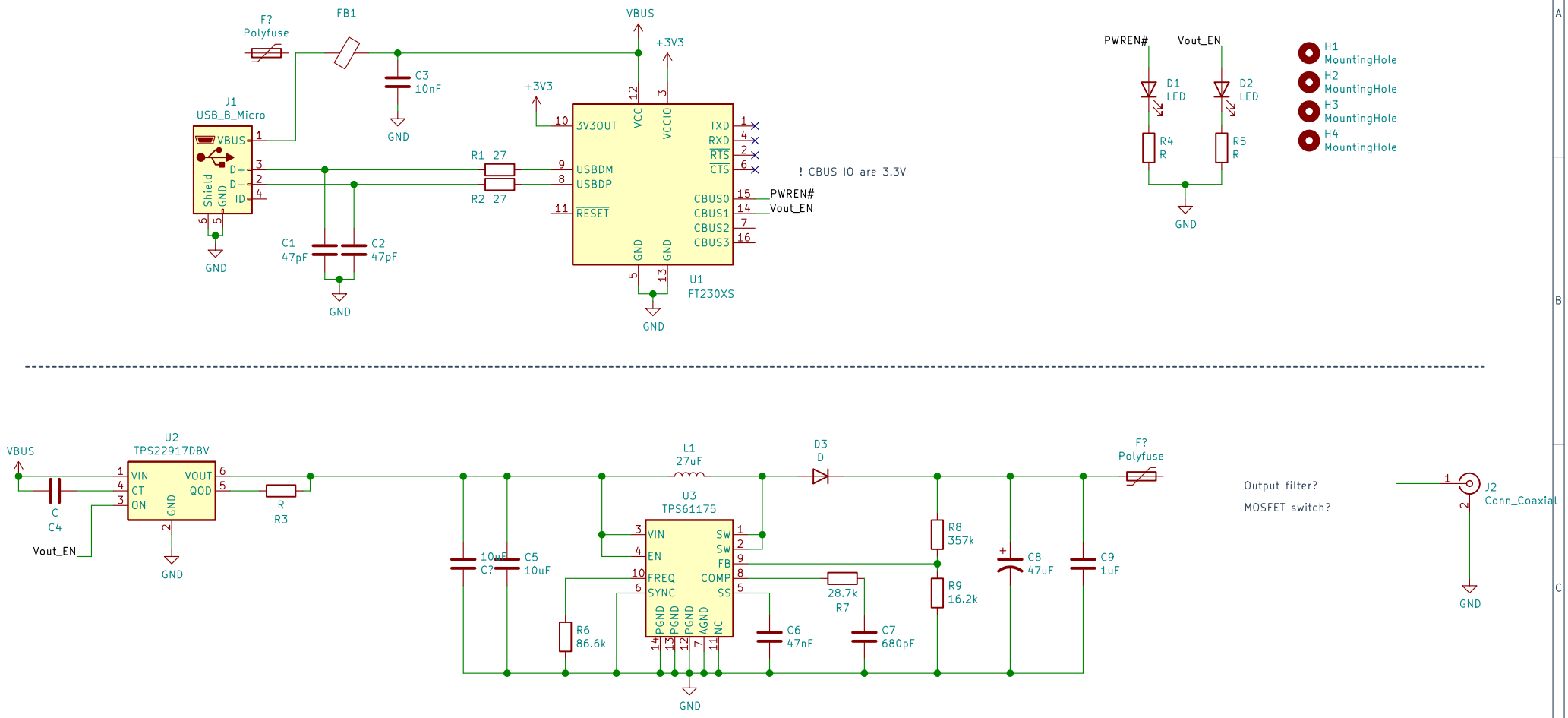

Derek Kozel

Bits to Volts

Sheet: /

File: noisesource-psu.sch

Title: RF Noise Source PSU

Size: A4	Date: 2020-04-17	**Rev: 0.1**
KiCad E.D.A. kicad 5.1.6-c6e7f7d86ubuntu19.10.1		Id: 1/1