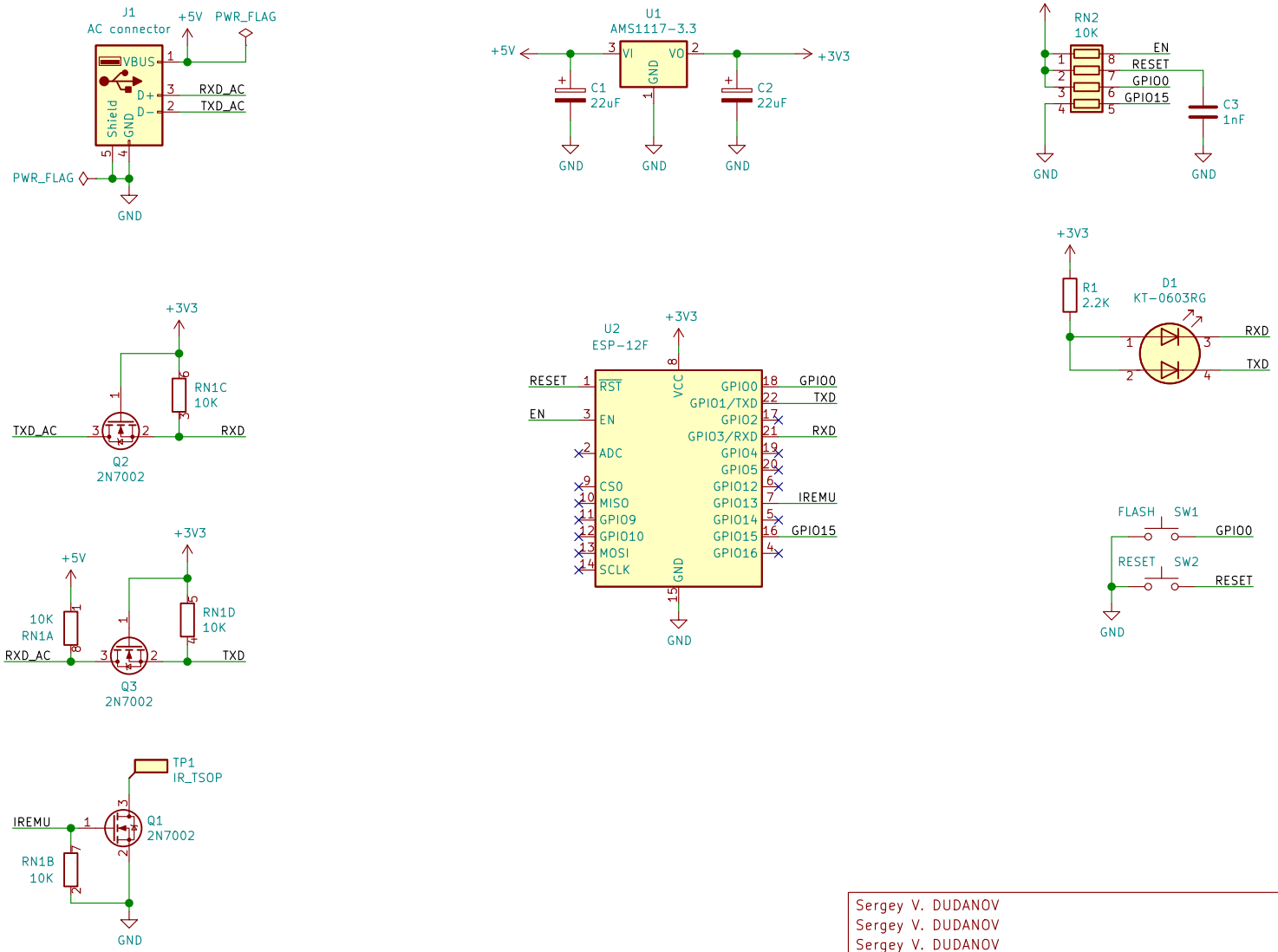

Sergey V. DUDANOV
Sergey V. DUDANOV
Sergey V. DUDANOV

Sheet: /
File: midea-open-dongle-dual-led.sch

Title: midea-open-dongle

Size: A4	Date: 2020-08-09	**Rev: 2.0**
KiCad E.D.A. kicad 5.1.10-88a1d61d5888ubuntu20.04.1		Id: 1/1