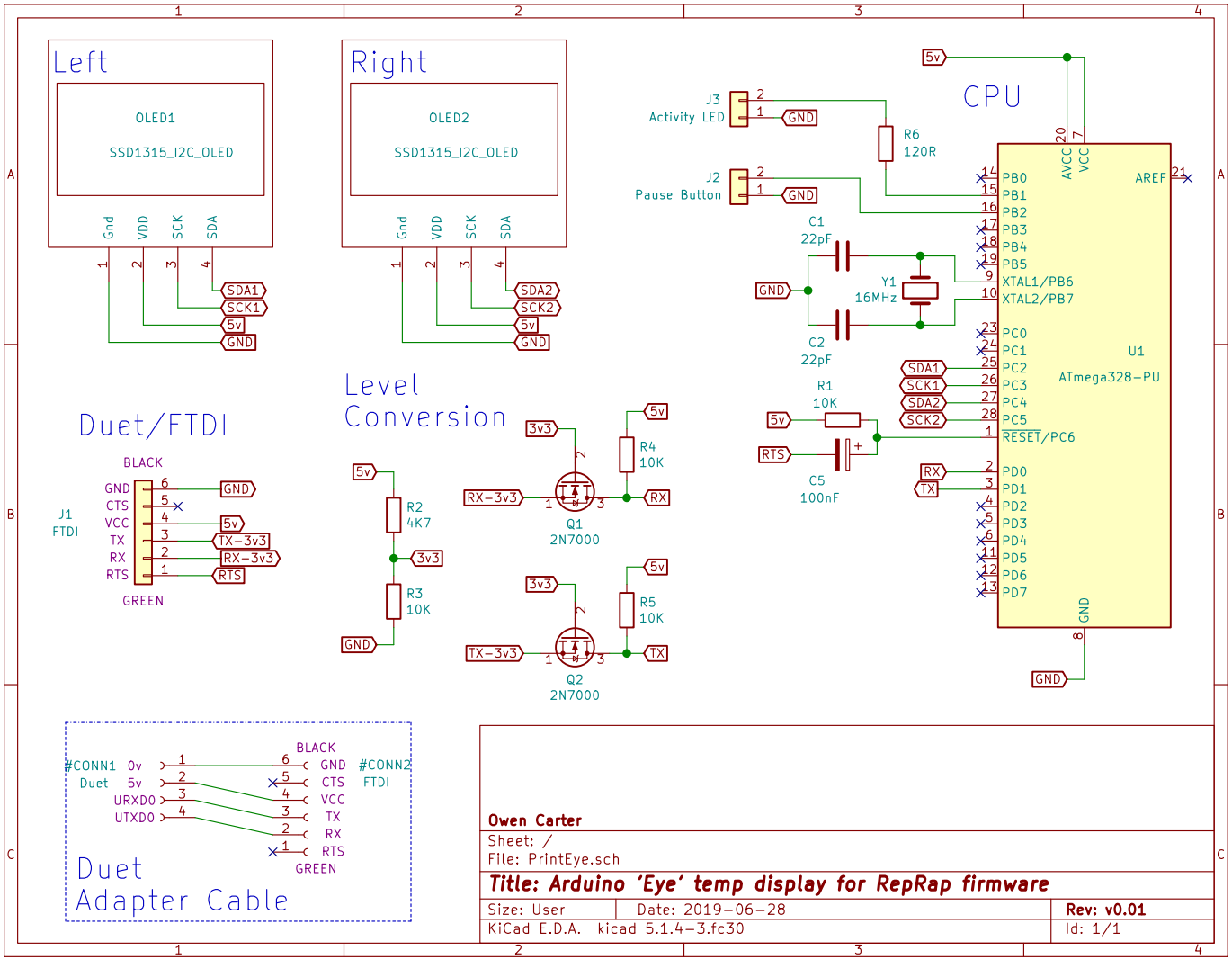

Owen Carter

Sheet: /

File: PrintEye.sch

Title: Arduino 'Eye' temp display for RepRap firmware

Size: User	Date: 2019-06-28	**Rev: v0.01**
KiCad E.D.A. kicad 5.1.4-3.fc30		Id: 1/1