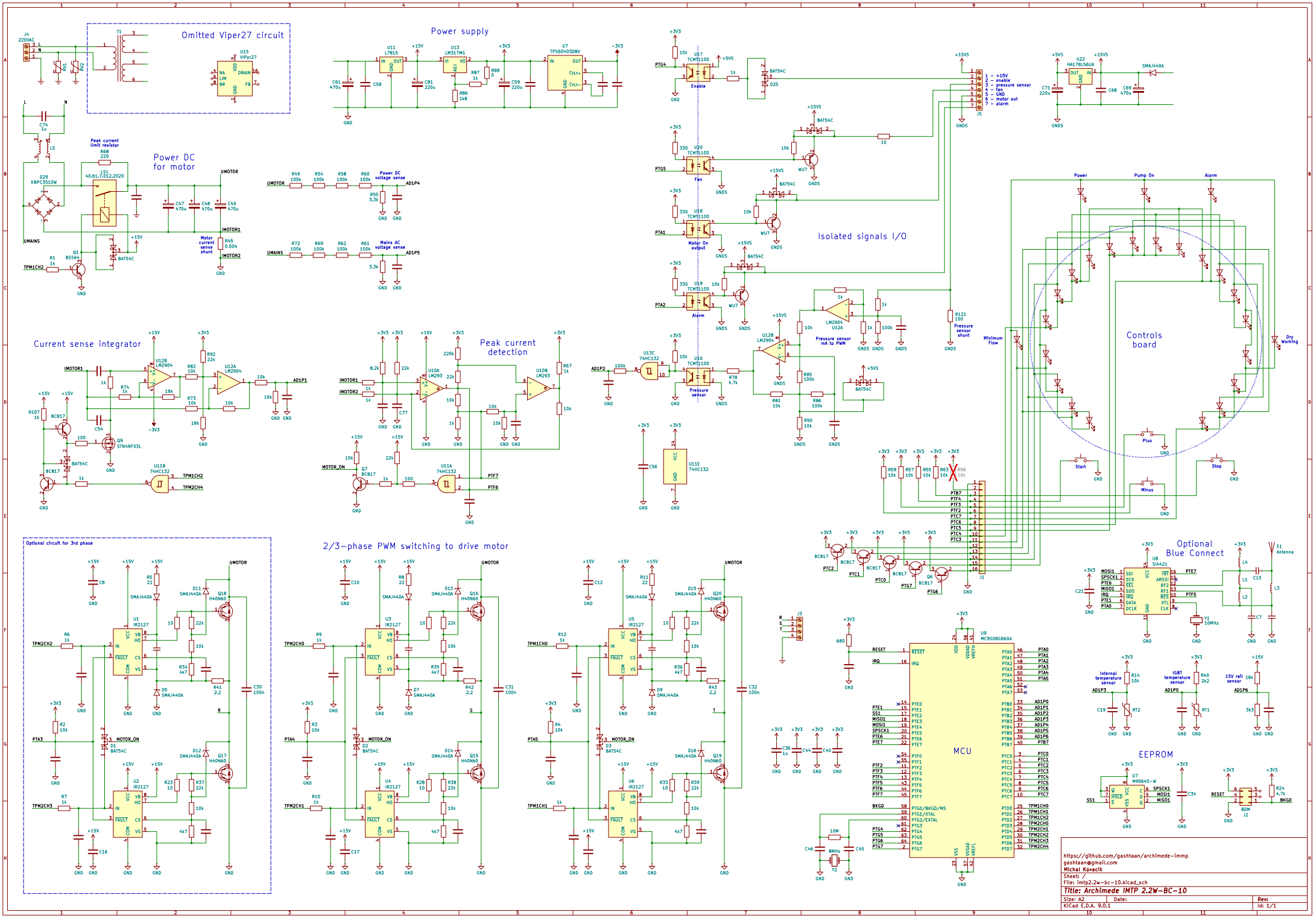
Omitted Viper27 circuit
Power supply
Power DC for motor
Isolated signals I/O
Controls board
Current sense integrator
Peak current detection
Optional circuit for 3rd phase
2/3-phase PWM switching to drive motor
Optional Blue Connect
EEPROM
MCU
https://github.com/gashtaan/archimede-immp
gashtaan@gmail.com
Michal Kovacik
Sheet: /
File: imtp2.2w-bc-10.kicad_sch
Title: Archimede IMTP 2.2W-BC-10
Size: A2
Date:
Rev:
KiCad E.D.A. 9.0.1
Id: 1/1