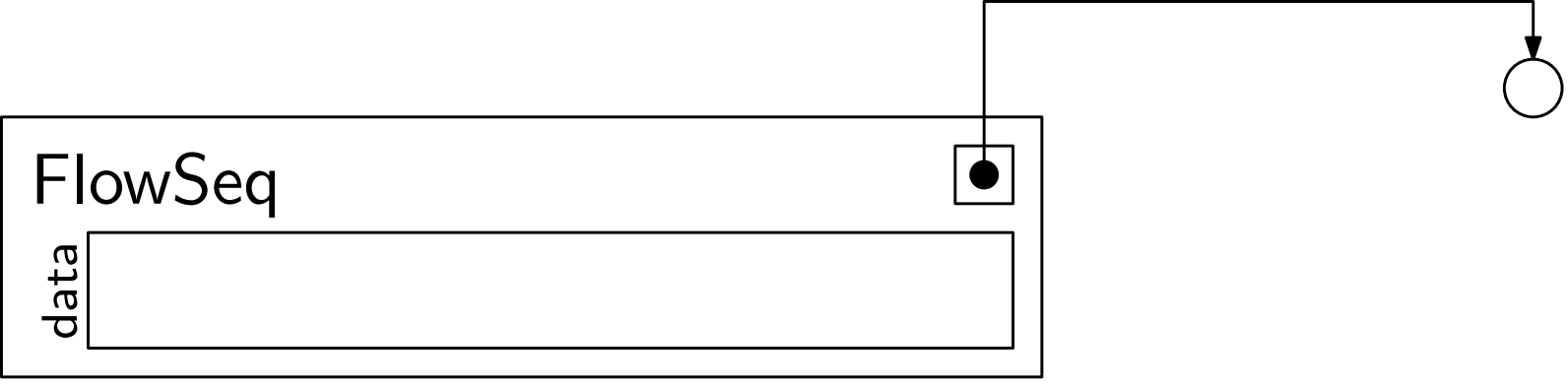
FlowSeq
data

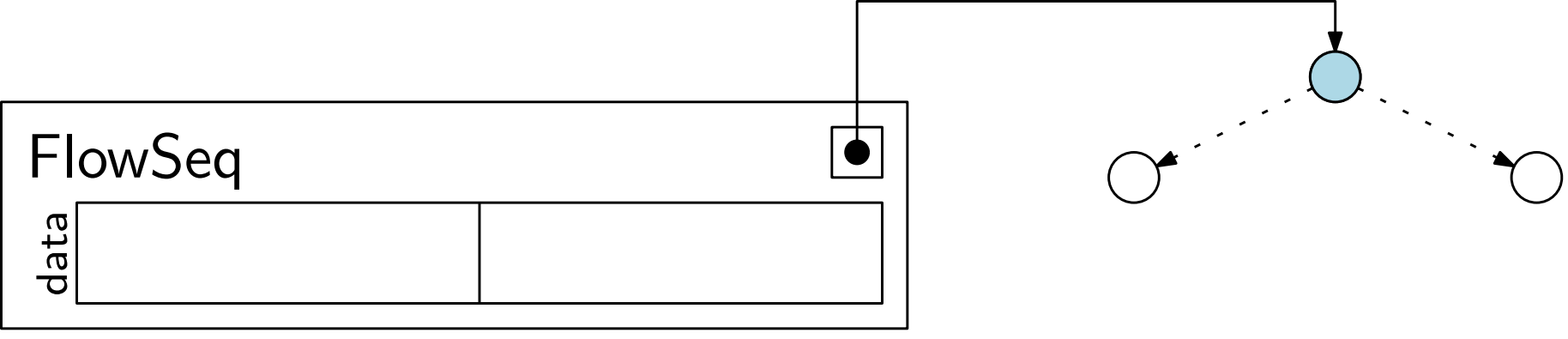
FlowSeq
data

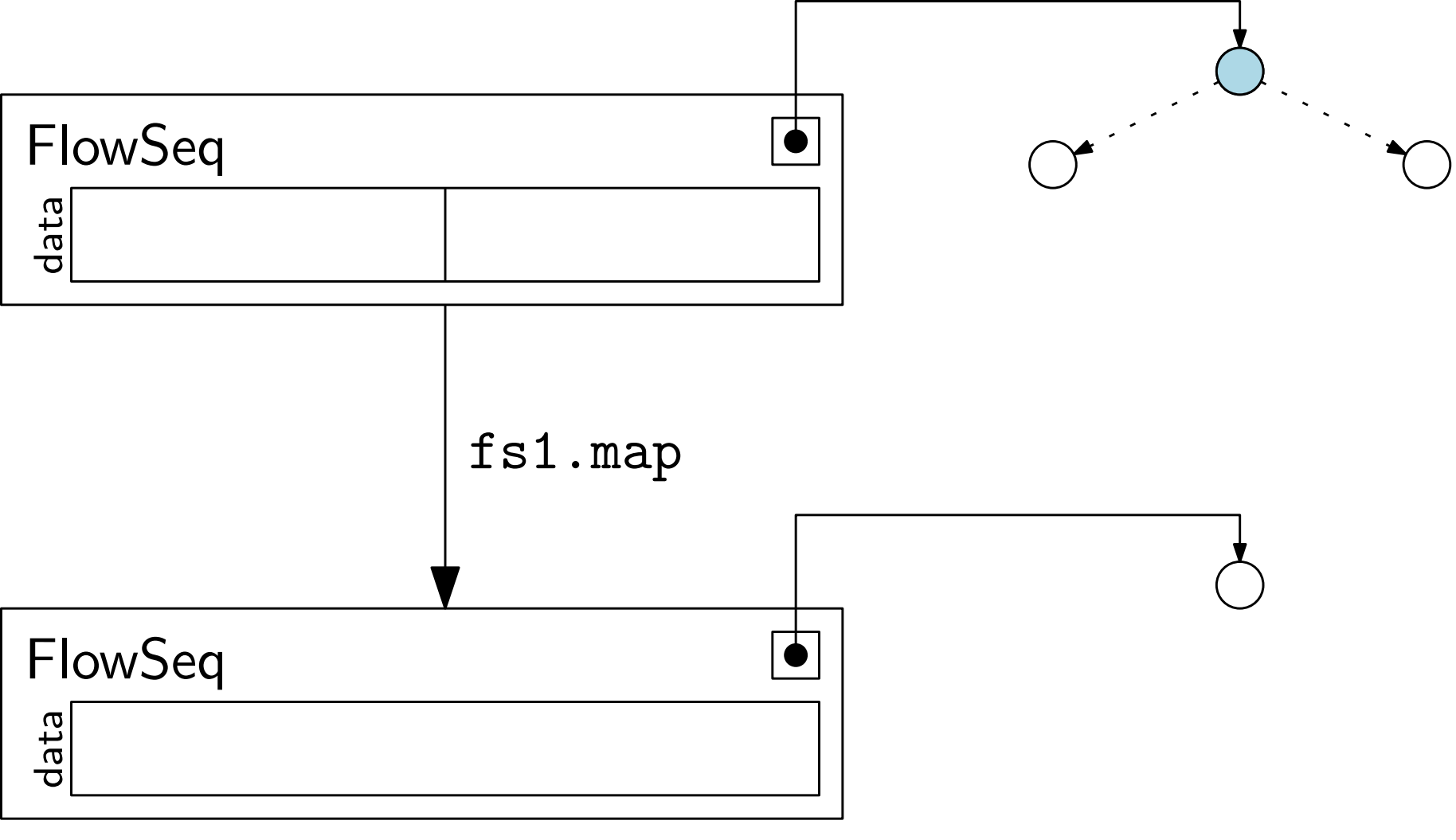
FlowSeq
data
fs1.map
FlowSeq
data

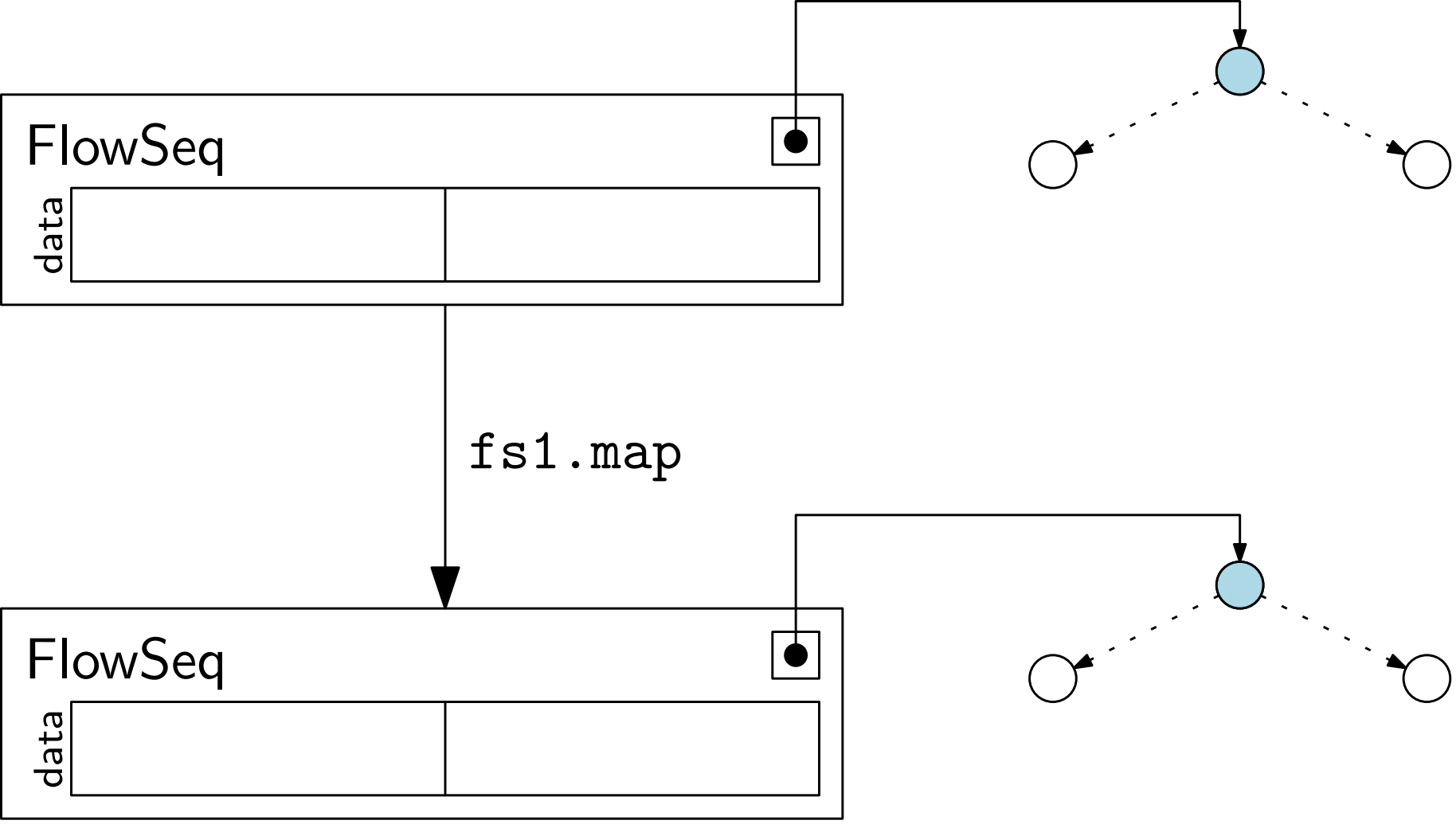
FlowSeq
data
fs1.map
FlowSeq
data

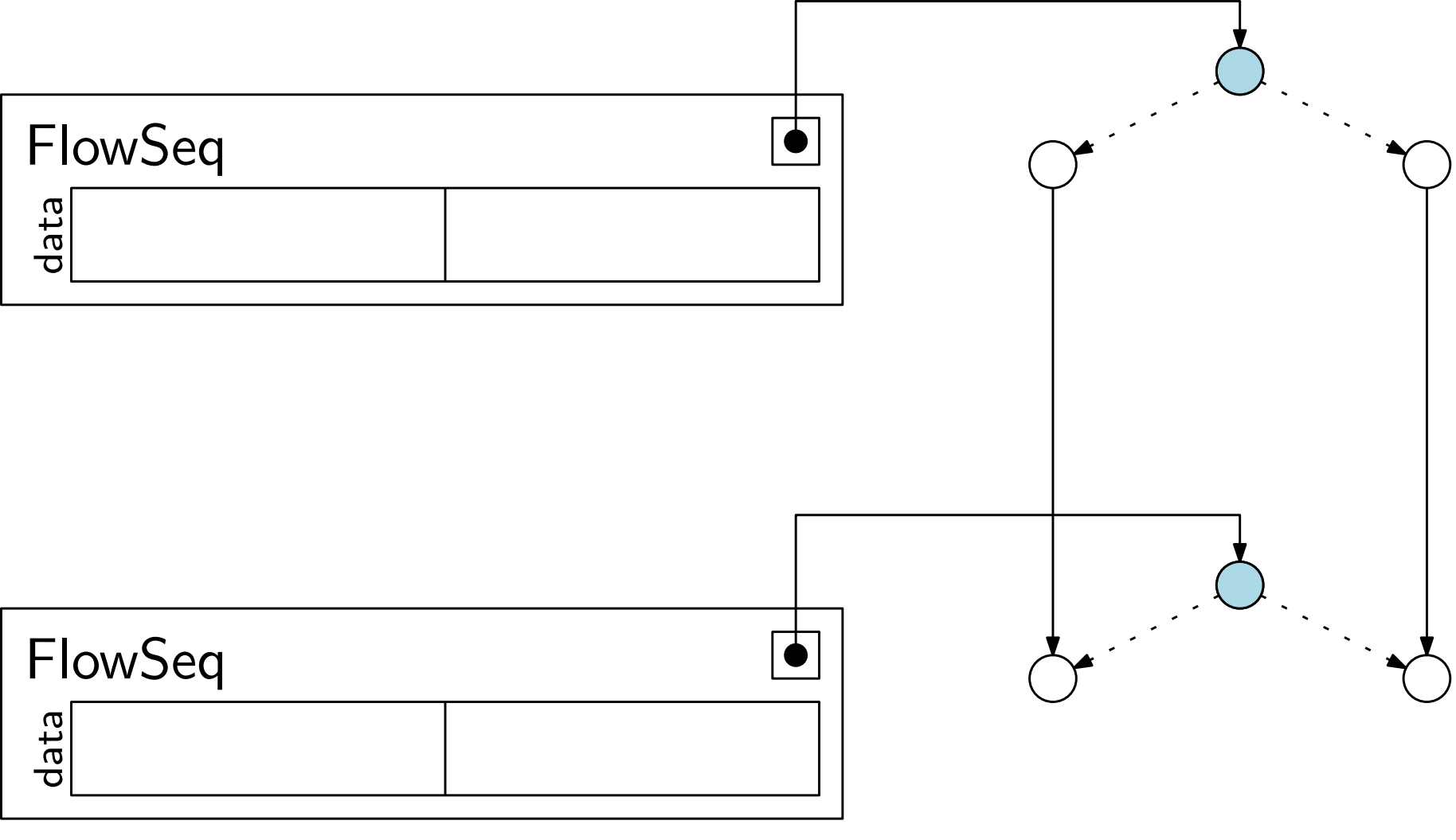
FlowSeq
data
FlowSeq
data

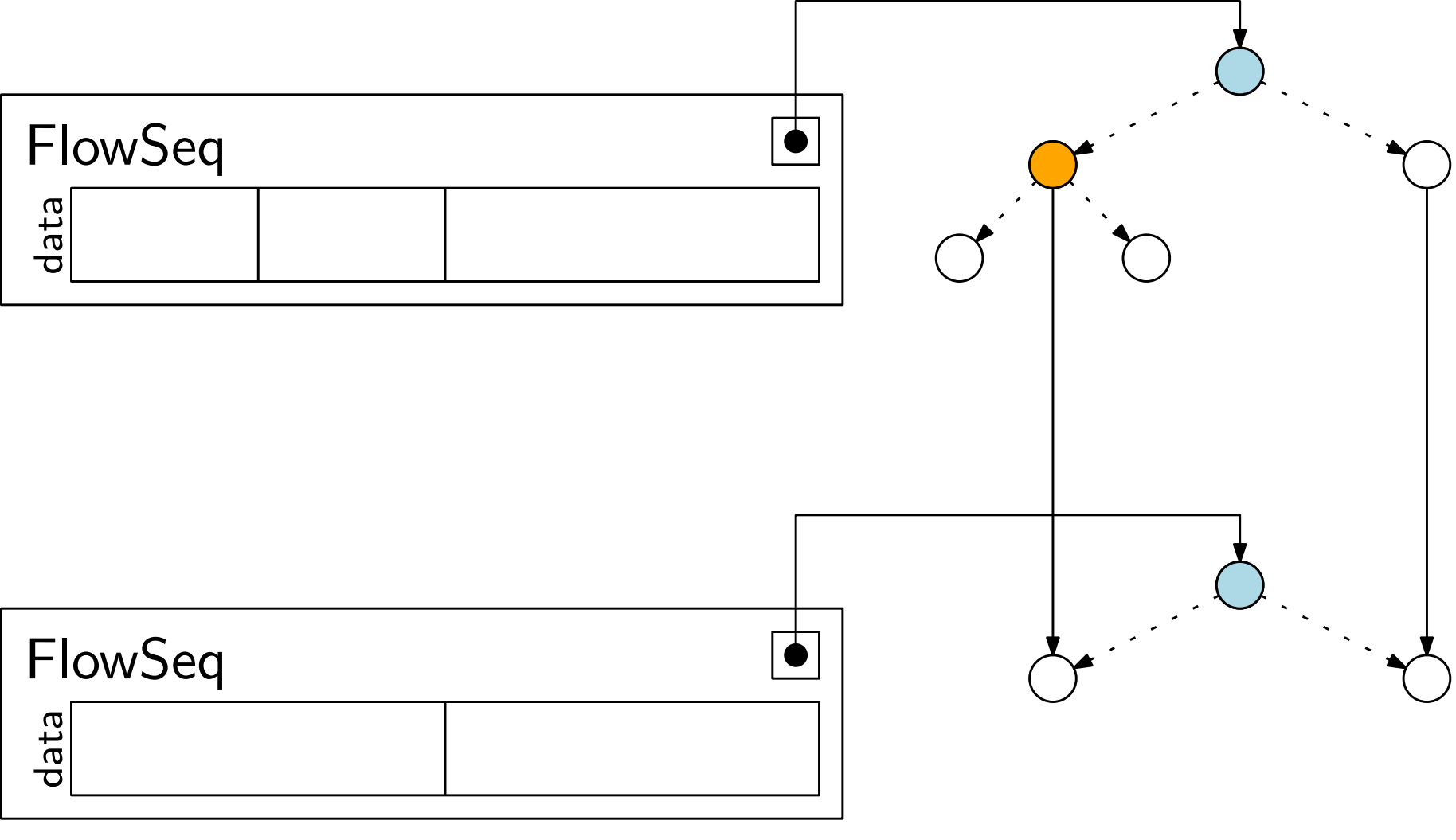
FlowSeq
data
FlowSeq
data

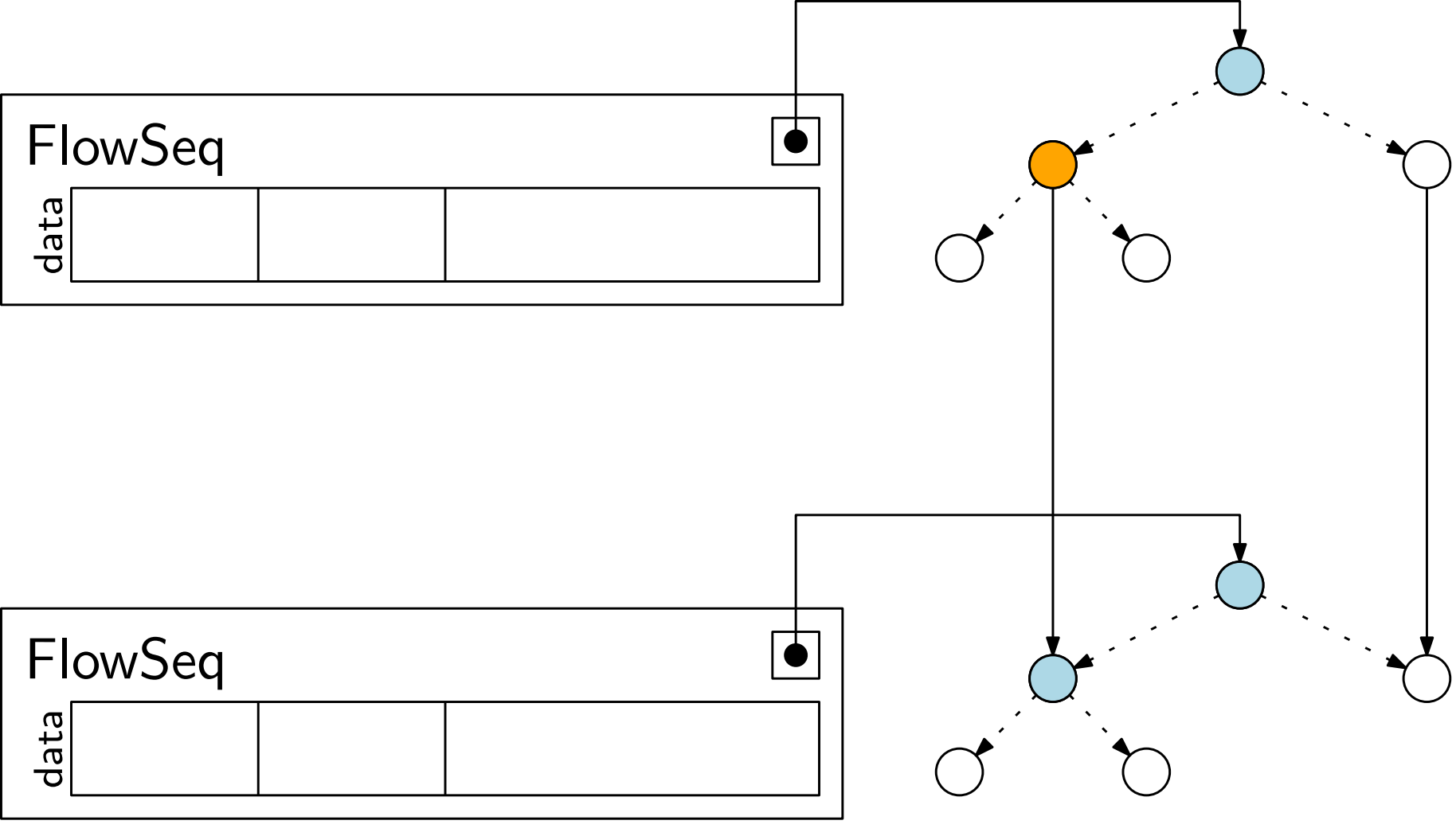
FlowSeq
data
FlowSeq
data

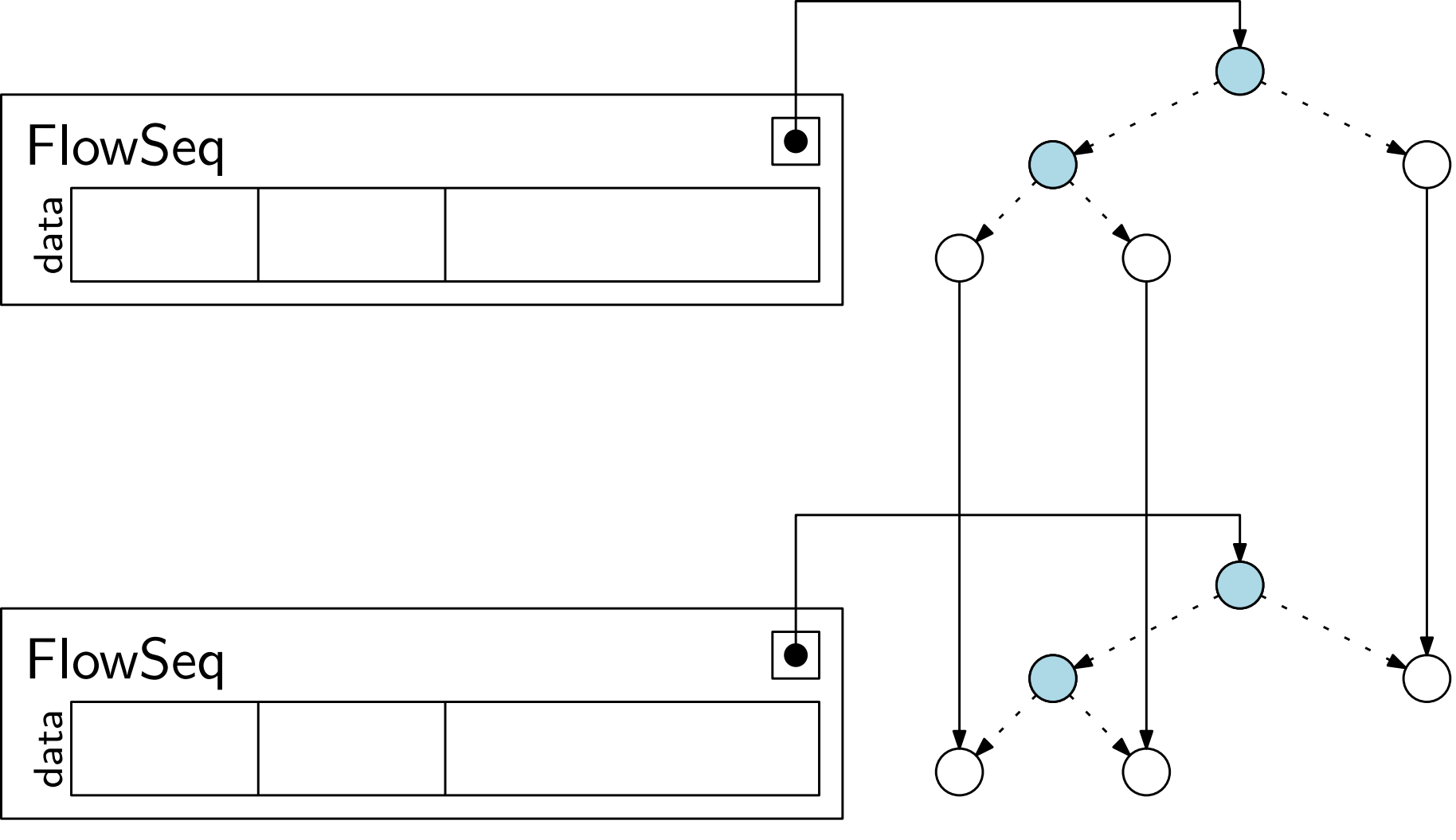
FlowSeq
data
FlowSeq
data

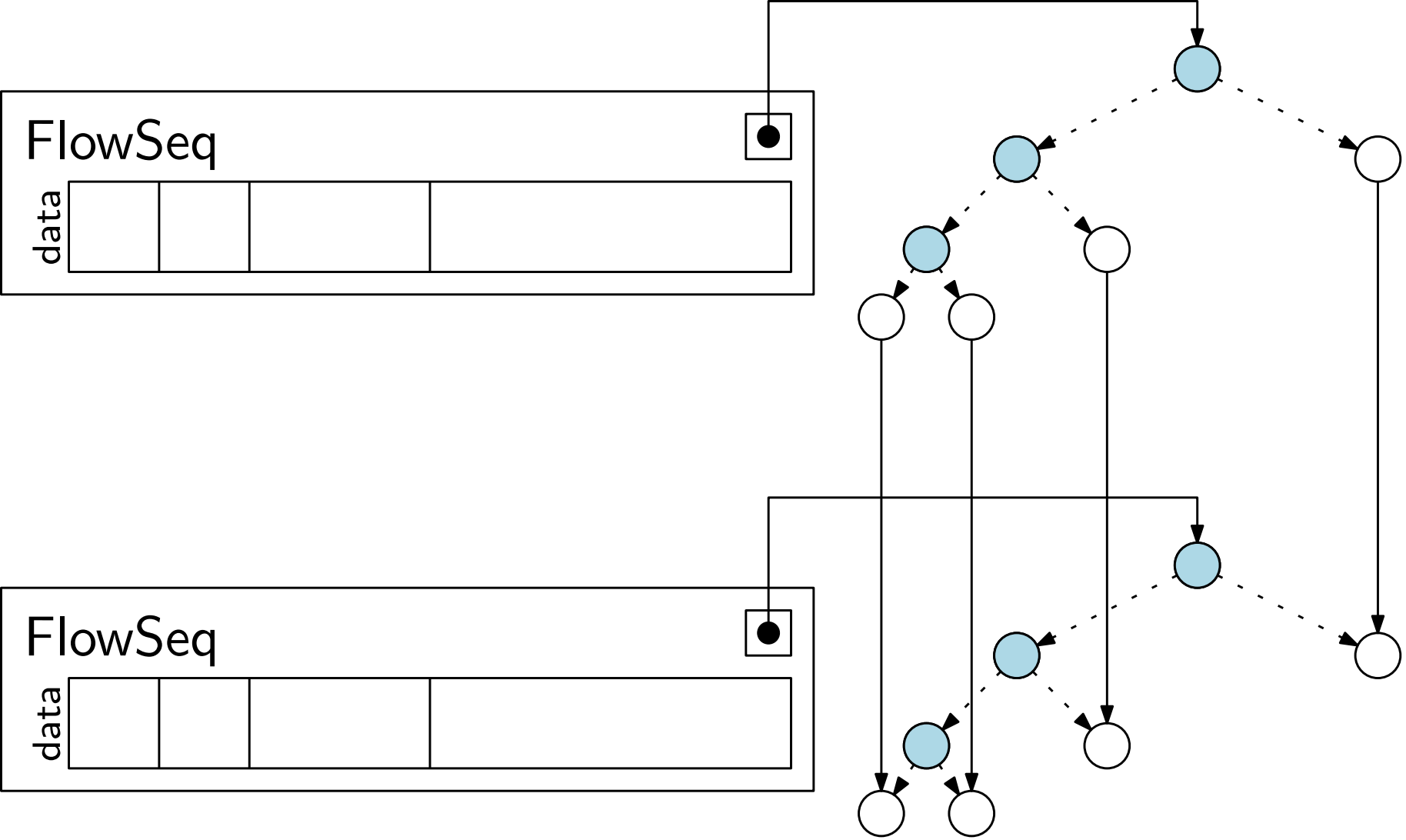
FlowSeq
data
FlowSeq
data

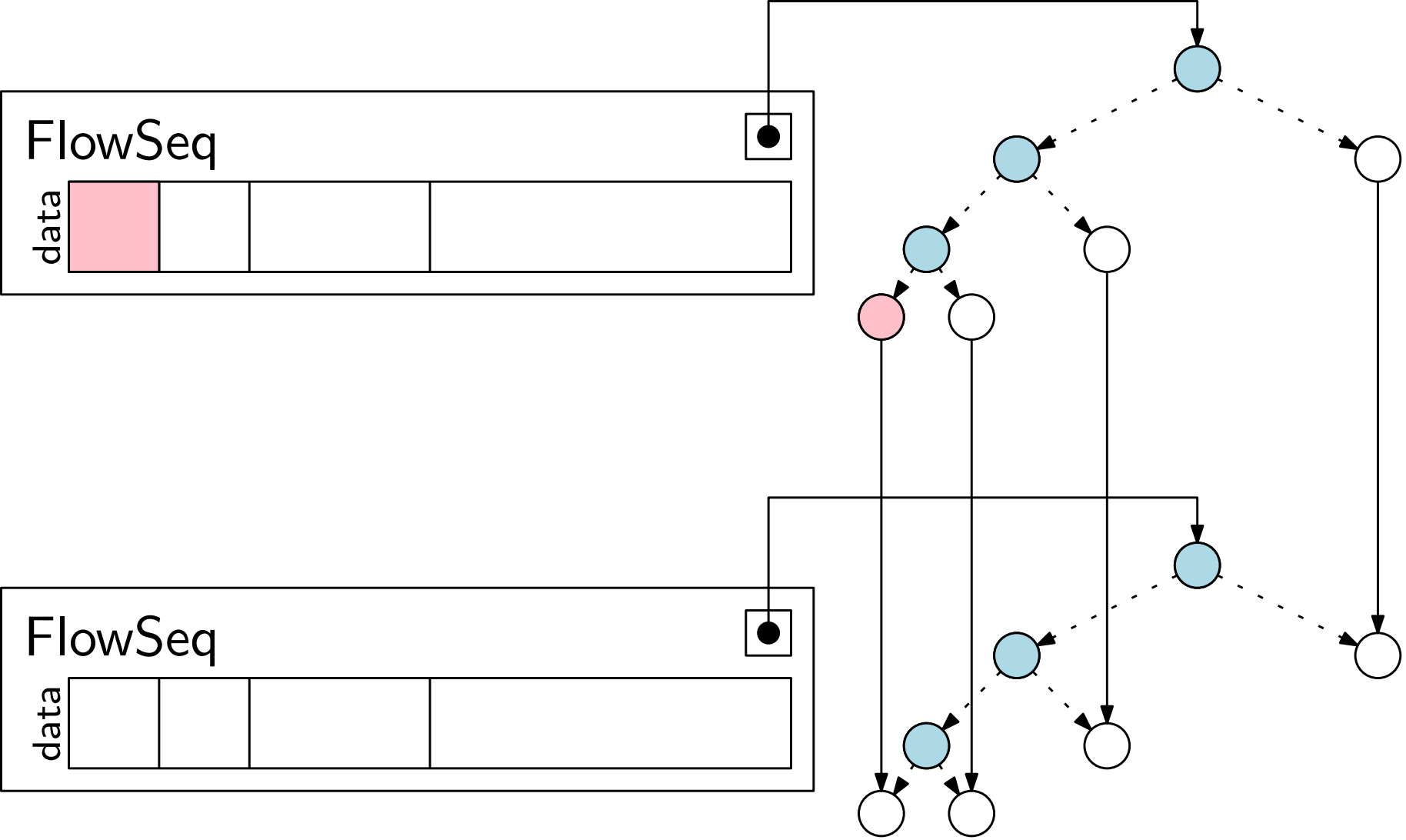
FlowSeq
data
FlowSeq
data

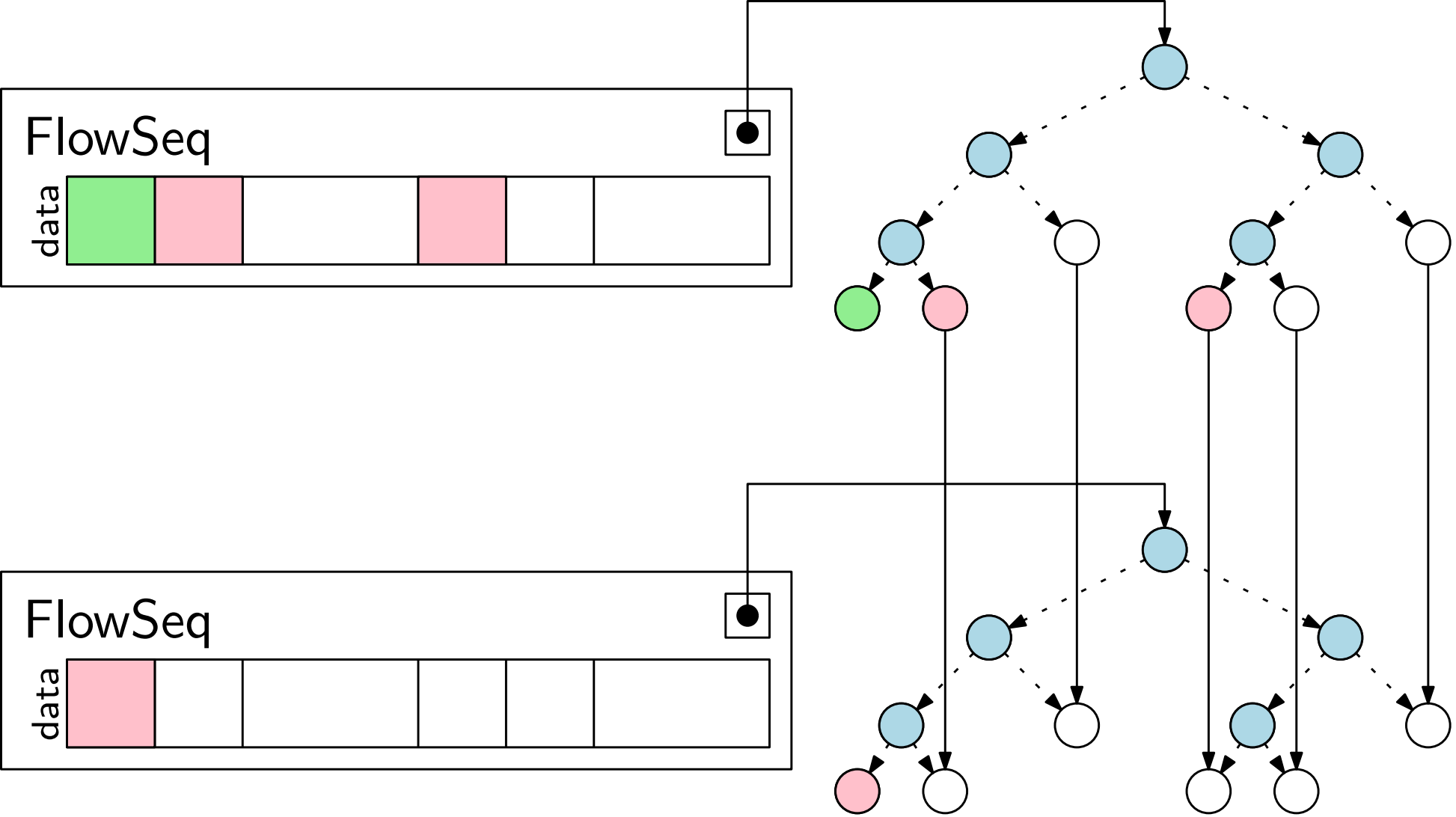
FlowSeq
data
FlowSeq
data

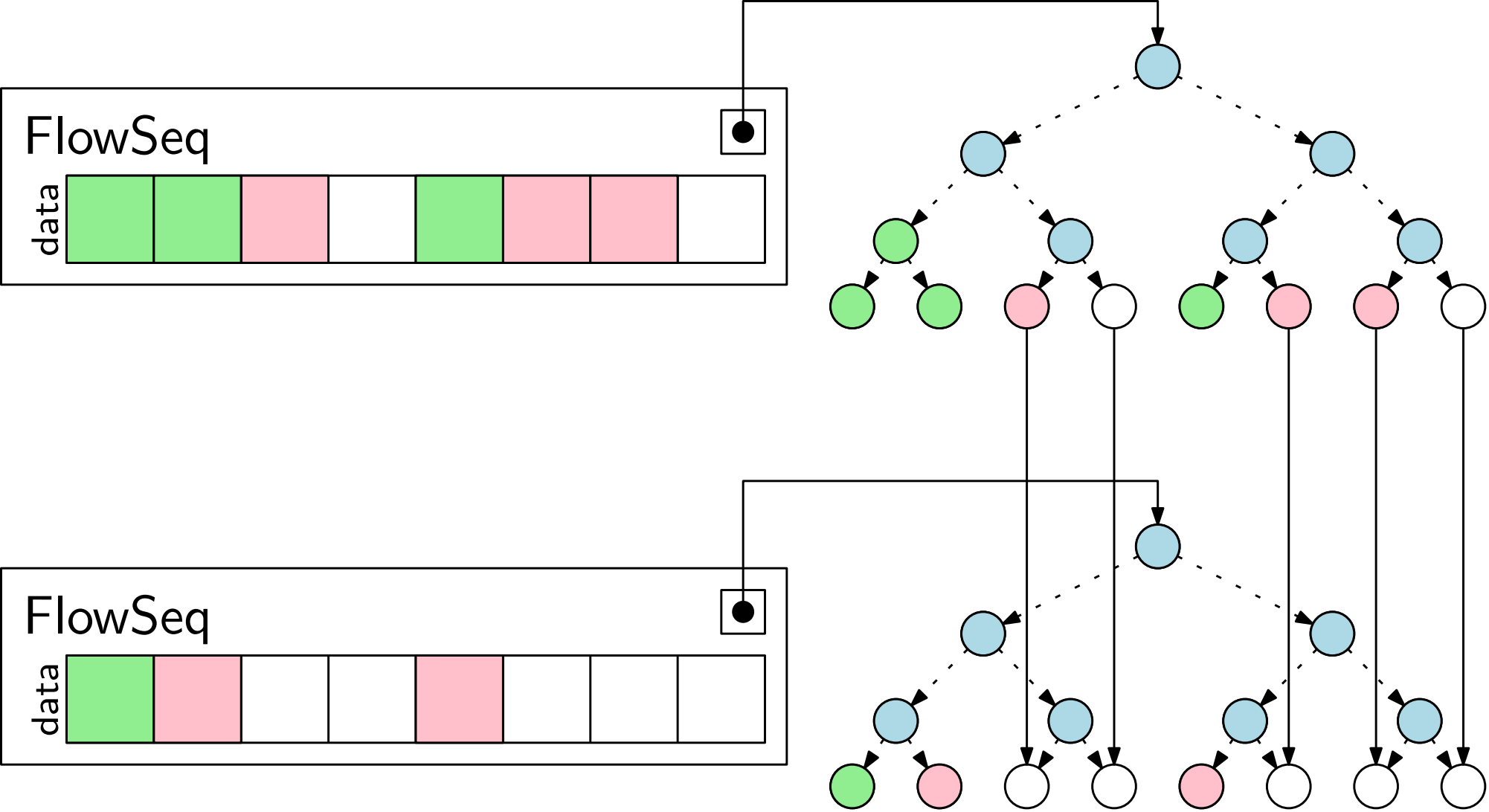
FlowSeq
data
FlowSeq
data

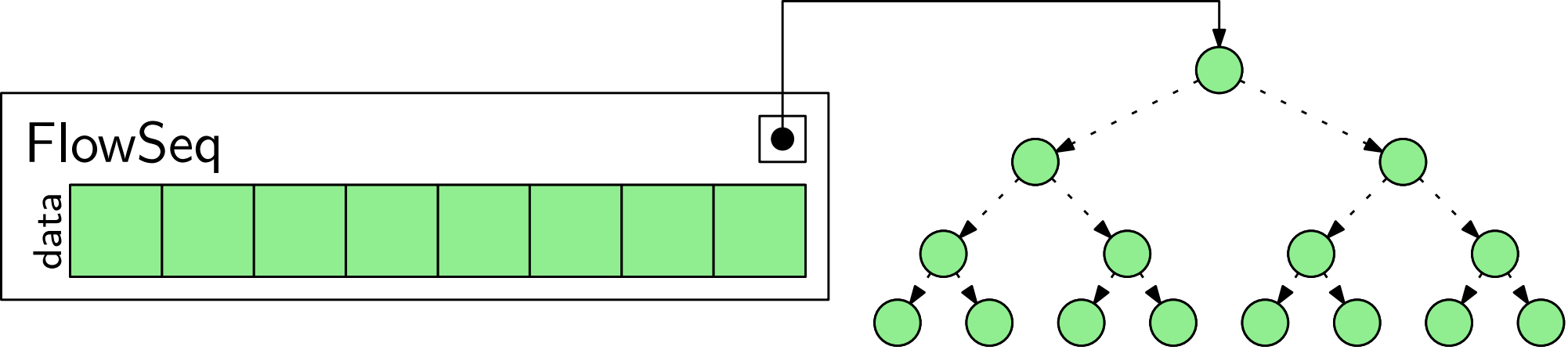
FlowSeq
data

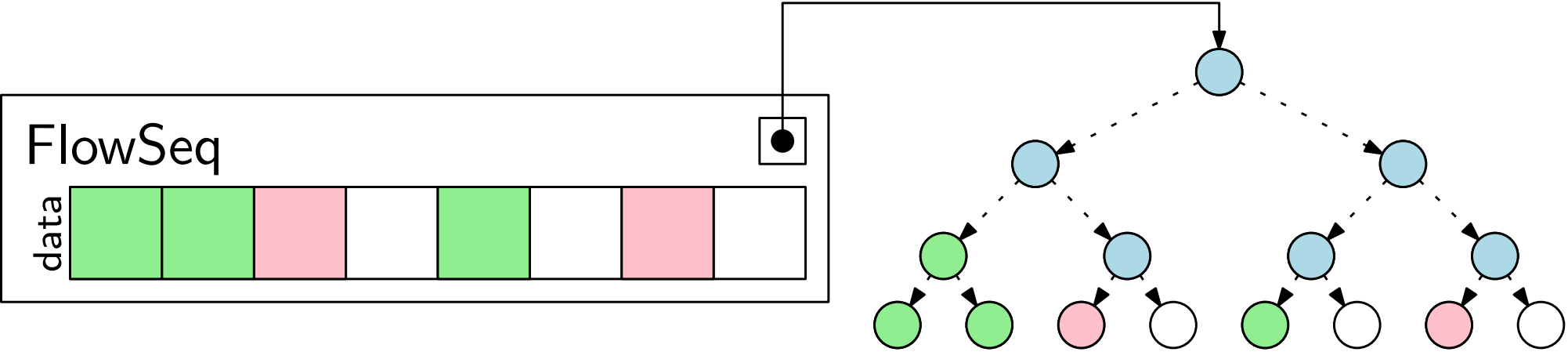
FlowSeq
data

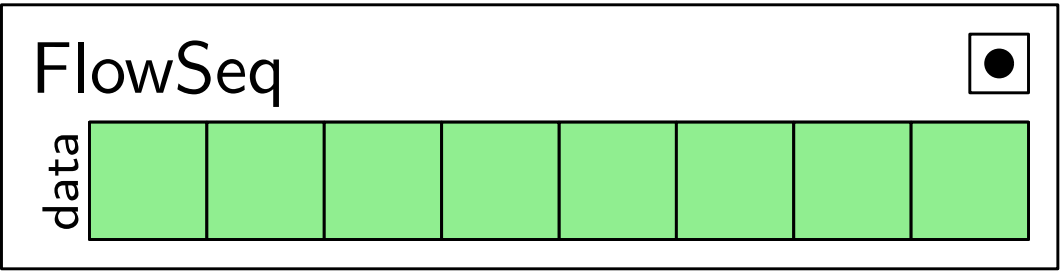
FlowSeq
data

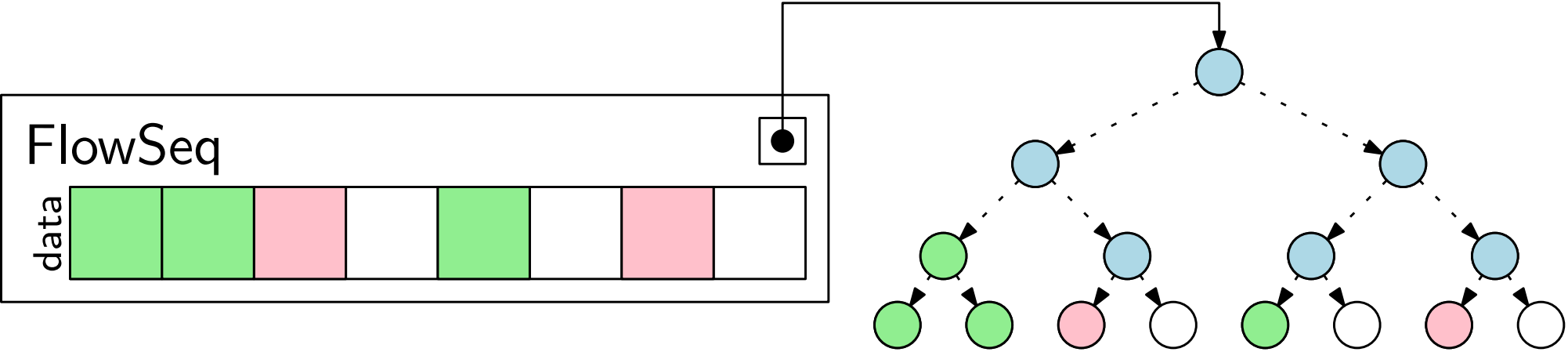
FlowSeq
data

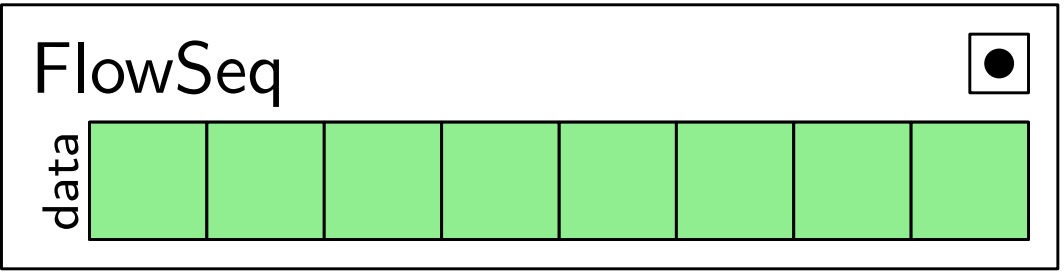
FlowSeq
data

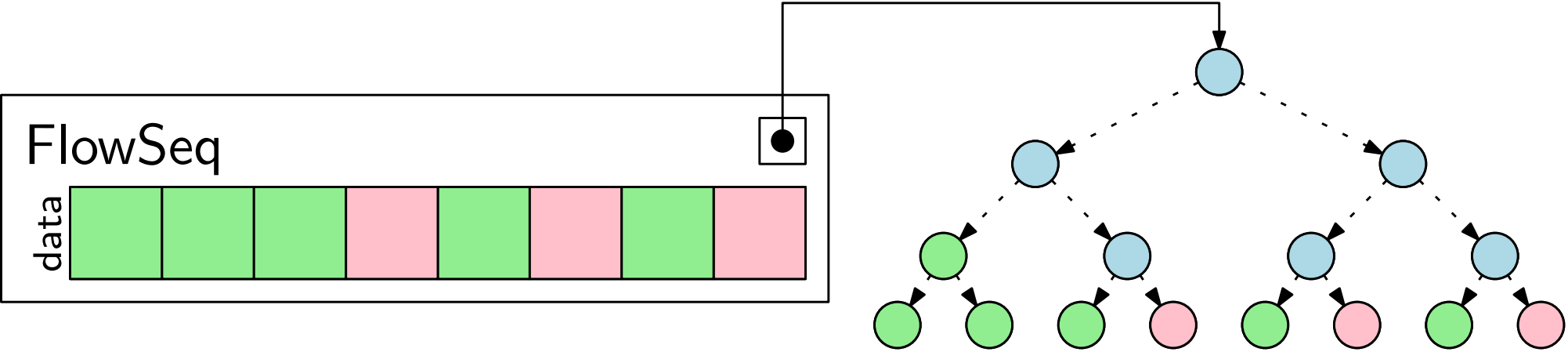
FlowSeq
data

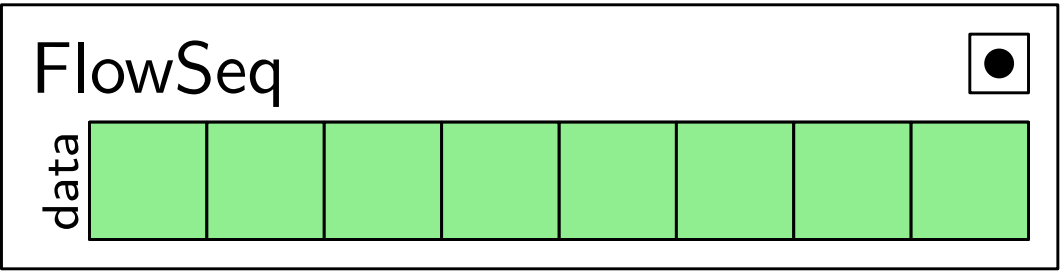
FlowSeq
data

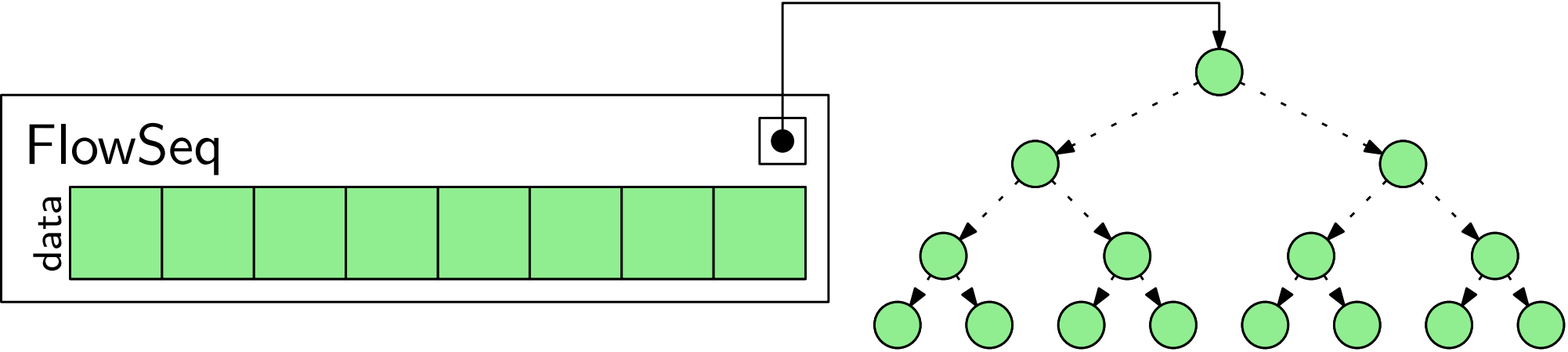
FlowSeq
data

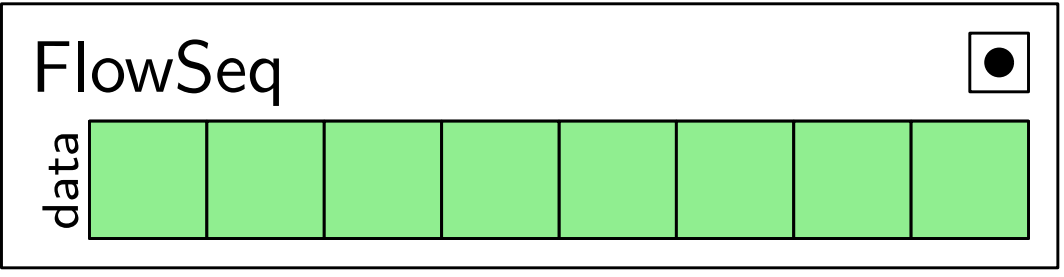
FlowSeq
data

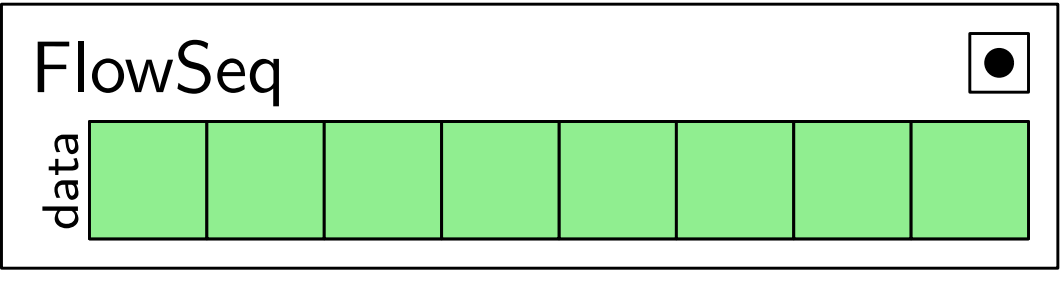
FlowSeq
data