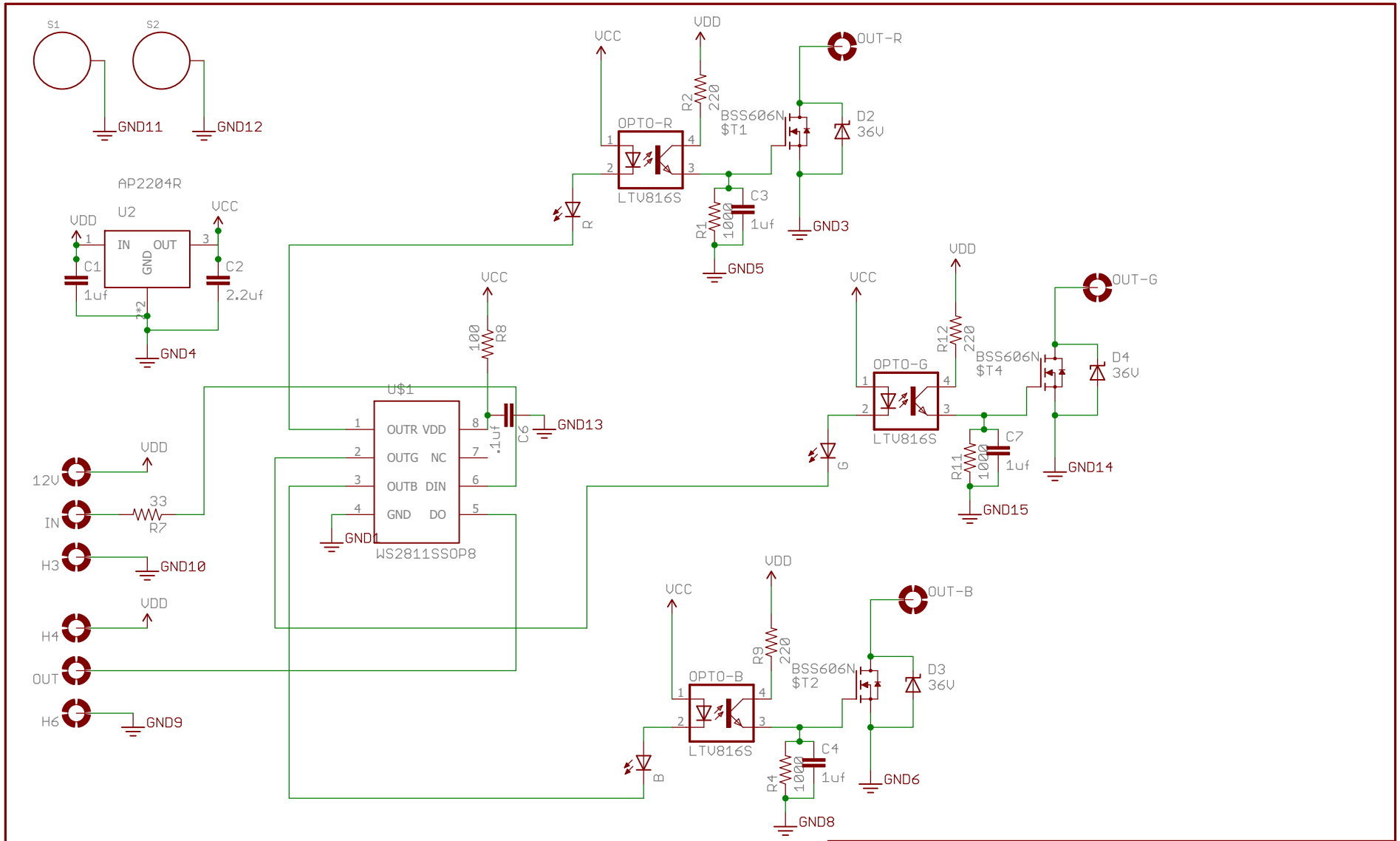

Released under the Creative Commons
Attribution Share-Alike 4.0 License
https://creativecommons.org/licenses/by-sa/4.0/

TITLE: solenoid

Design by:
Michael L. Weiss

REV:
1.1

Date: not saved!

Sheet: 1/1