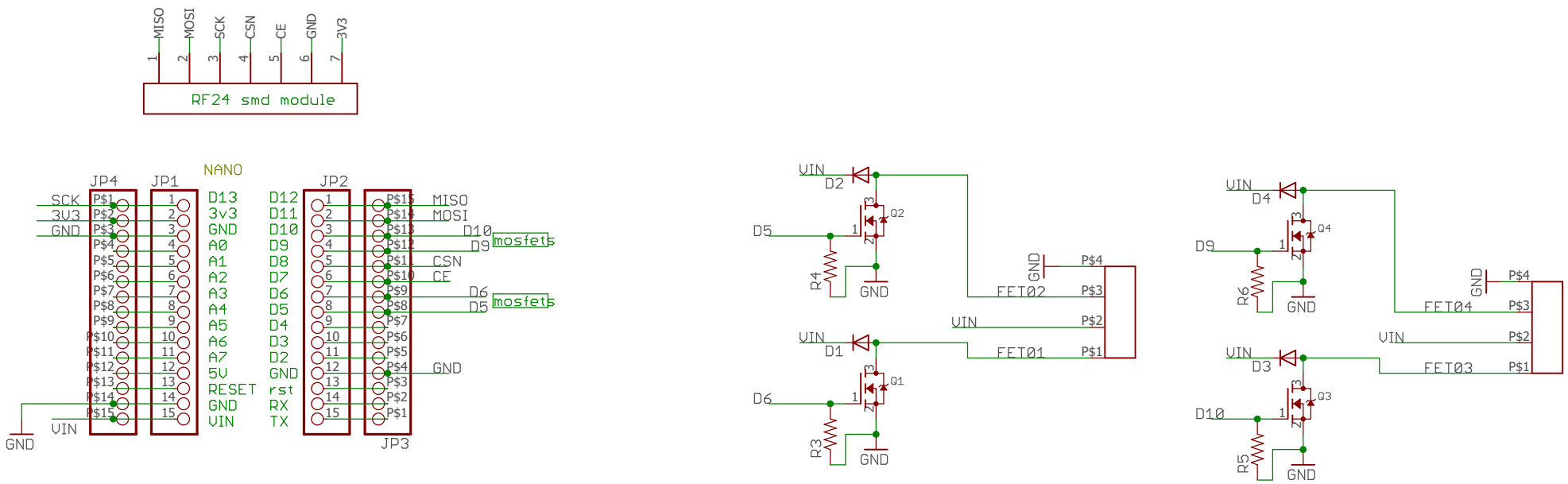

https://github.com/shenkarSElab/nano24rf