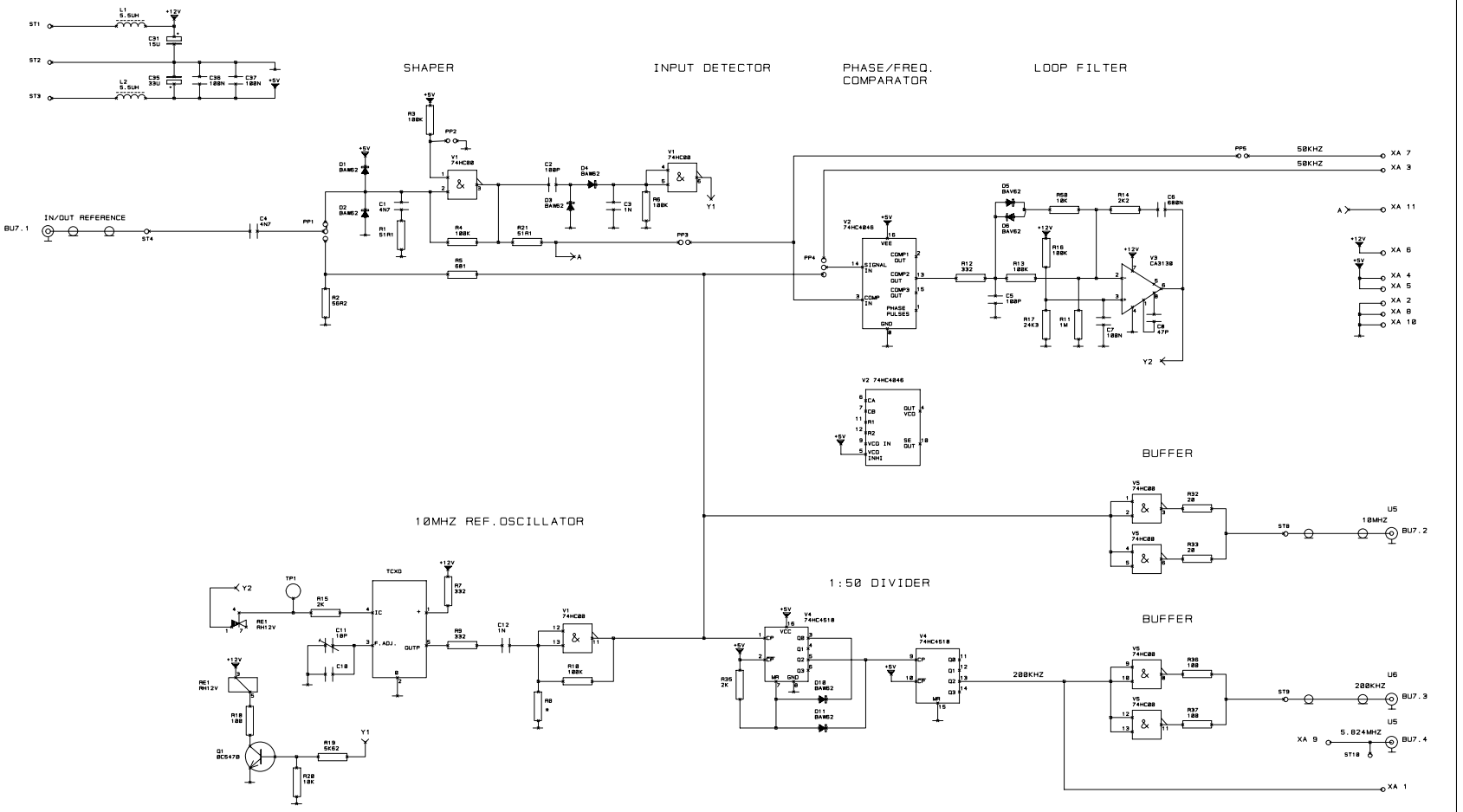

* SELECTED

FIRST USED IN: PM5686/U7
PCB REF.: 4008 117 0441

A .SCM 70121 .SCM ABCK .PCB 84411 .PCB	MASTER OSCILLATOR	4008 109 7012	.1 88-08-17 .1 89-01-24	
NAME CWI/SM/BBN/JML	1 SH	SH - 130 - 1		
KF PTV LAB PEI BOX1818 DK-2300 COPENHAGEN S		DAT 88-01-13		A3L

PROPERTY OF PHILIPS ELECTRONIX INDUSTRI A/S
ALL RIGHTS STRICTLY RESERVED.