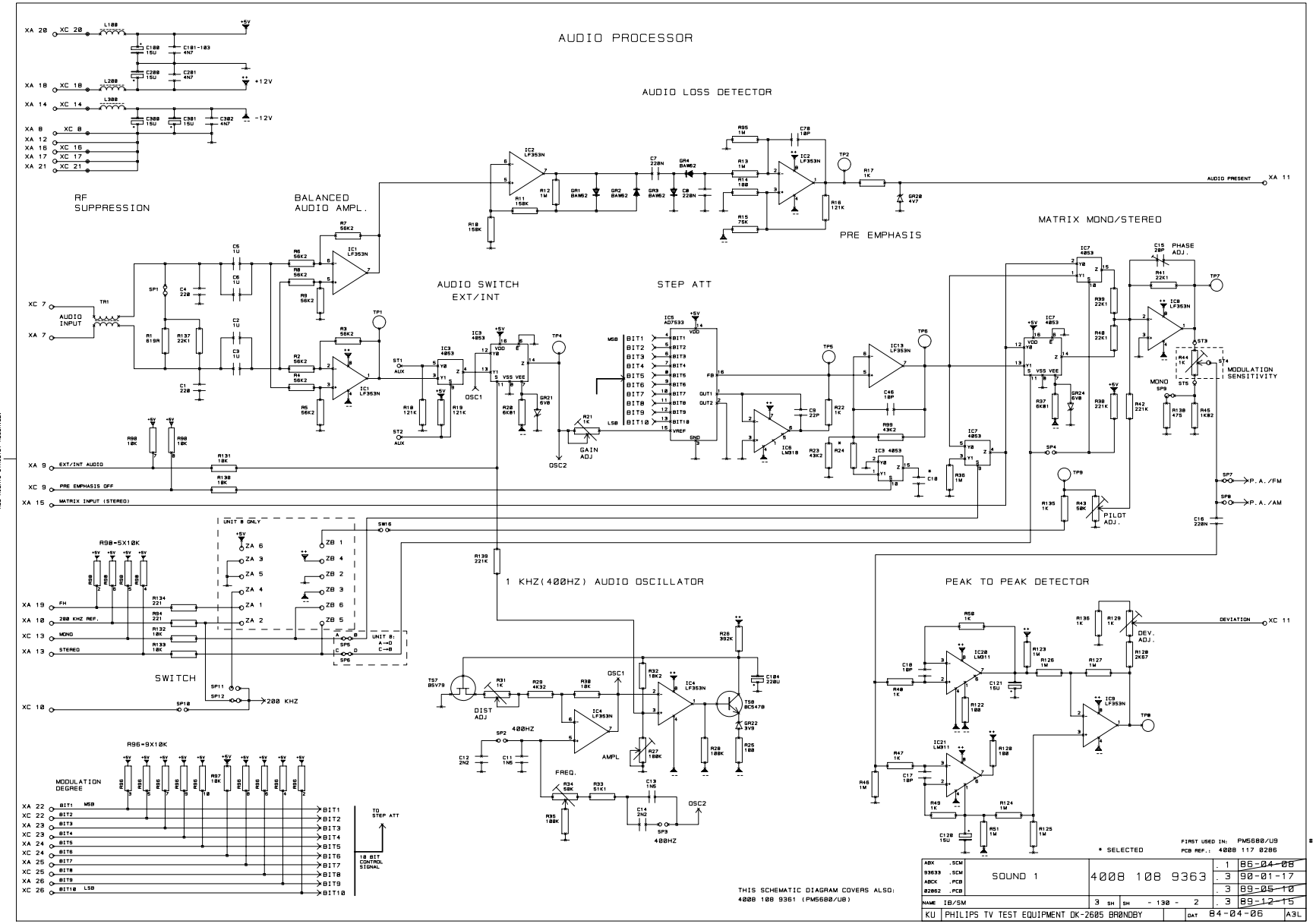

PROPERTY OF PHILIPS TV TEST EQUIPMENT A/S
ALL RIGHTS STRICTLY RESERVED.

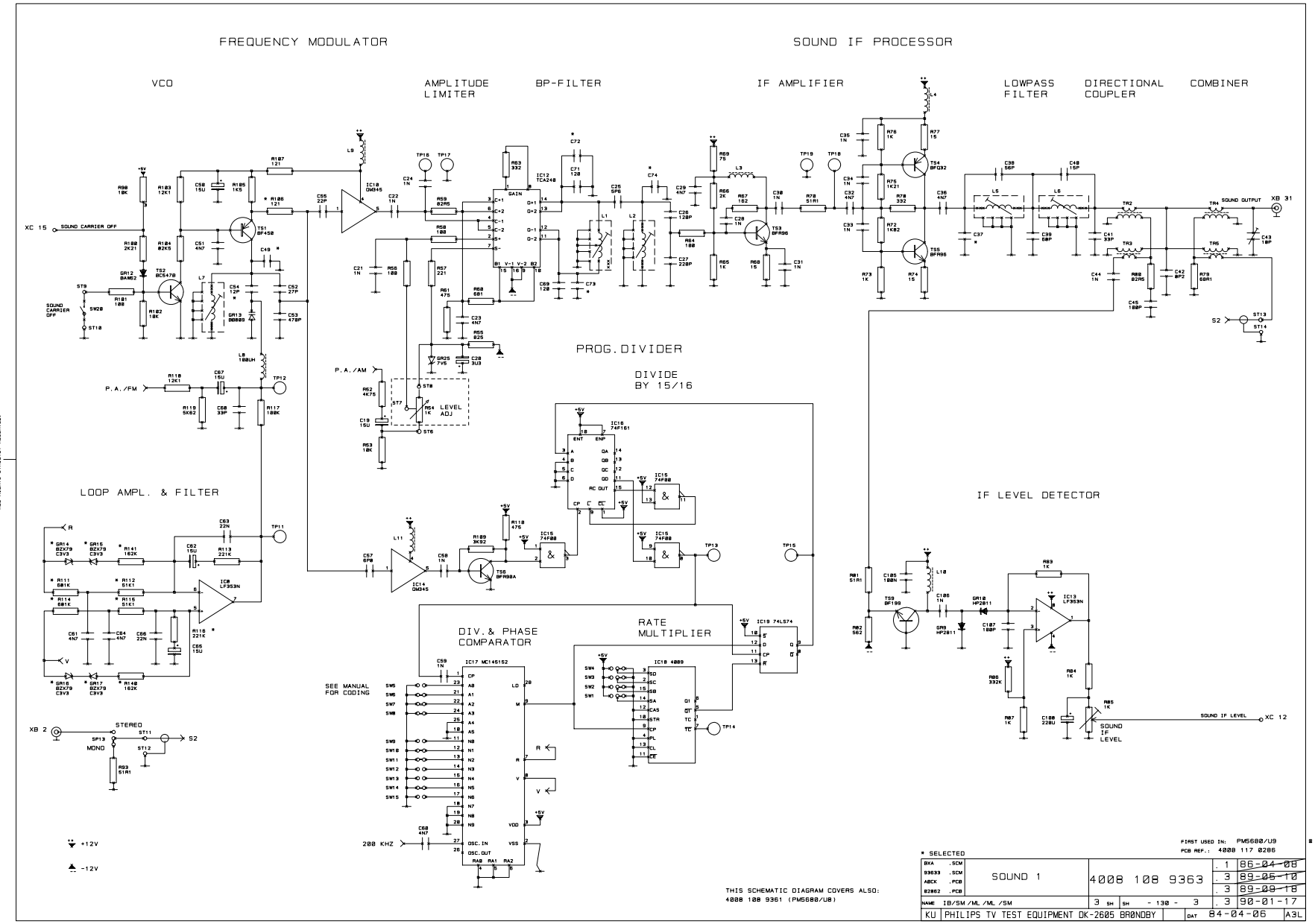

PROPERTY OF PHILIPS TV TEST EQUIPMENT A/S
ALL RIGHTS STRICTLY RESERVED.