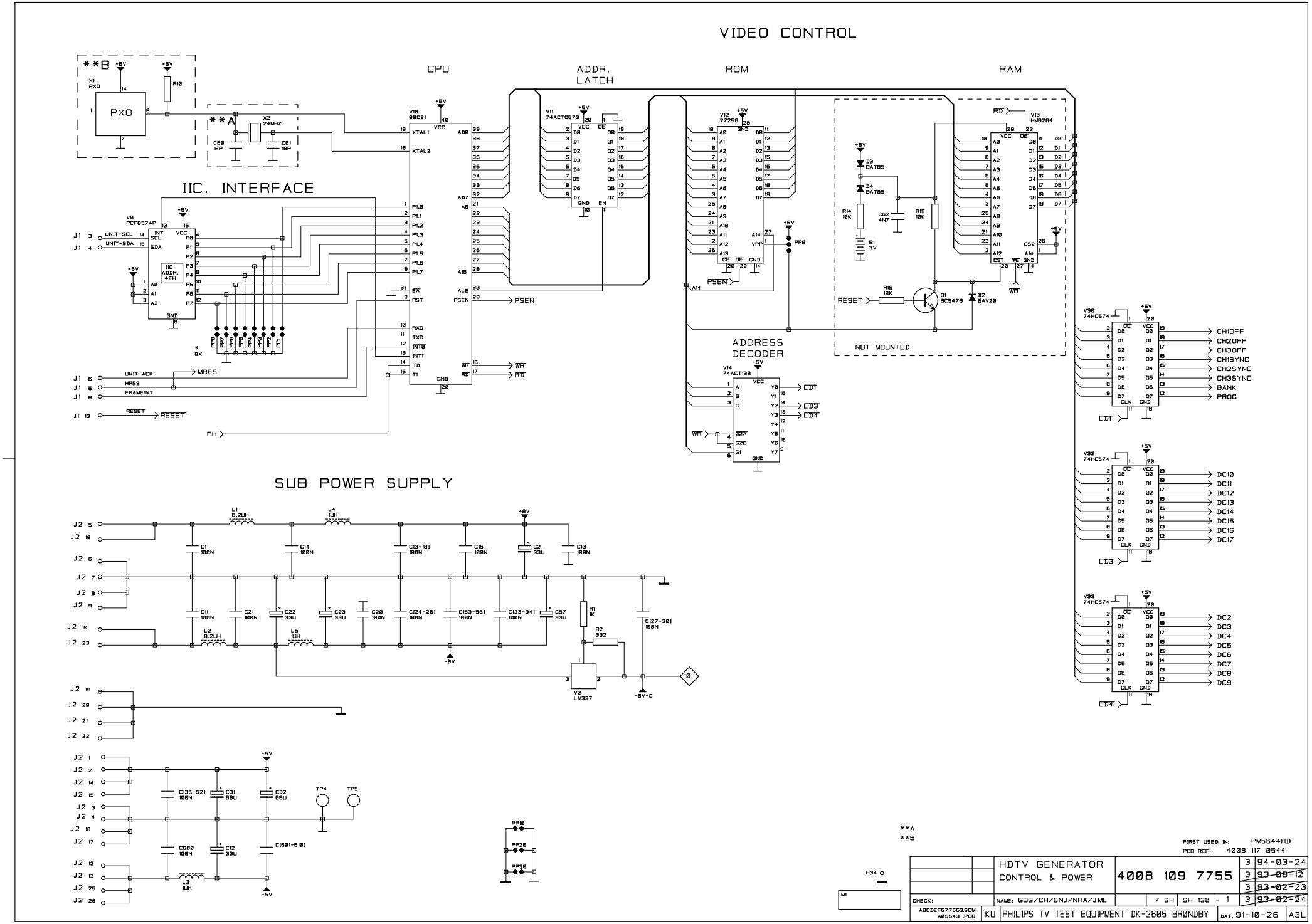

PROPERTY OF PHILIPS TV TEST EQUIPMENT A/S
ALL RIGHTS STRICTLY RESERVED.

IC-NYT LIB REST GAMMEL LIB PP9-4008 107 45210

PROPERTY OF PHILIPS TV TEST EQUIPMENT A/S
ALL RIGHTS STRICTLY RESERVED.

SINEWARE TO TTL CONV.

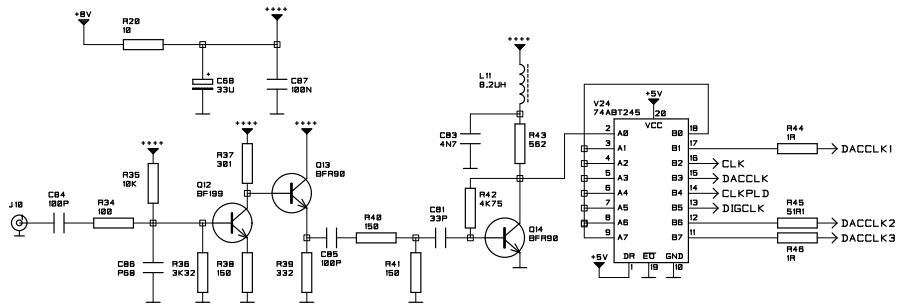

H-COUNTER/LOGIC DECODER

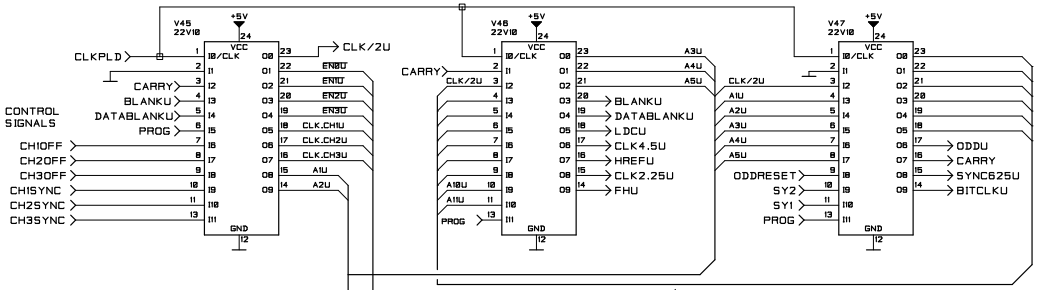

SEGMENT COUNTER

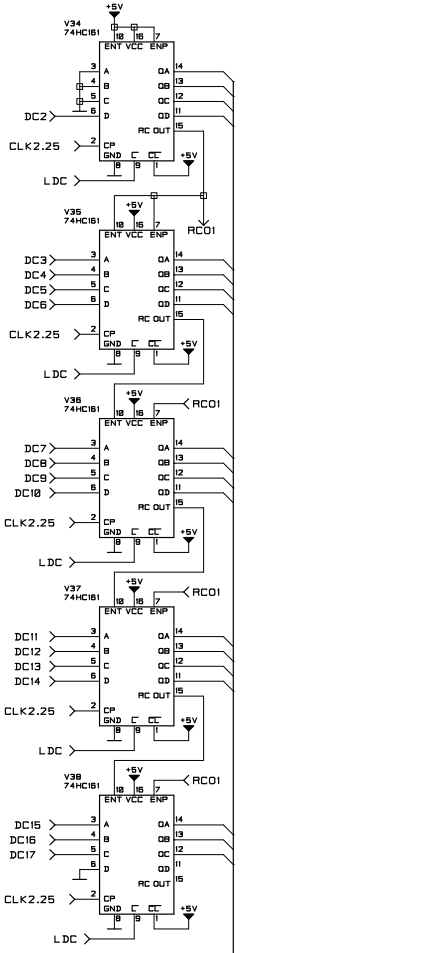

SEGMENT DECODER

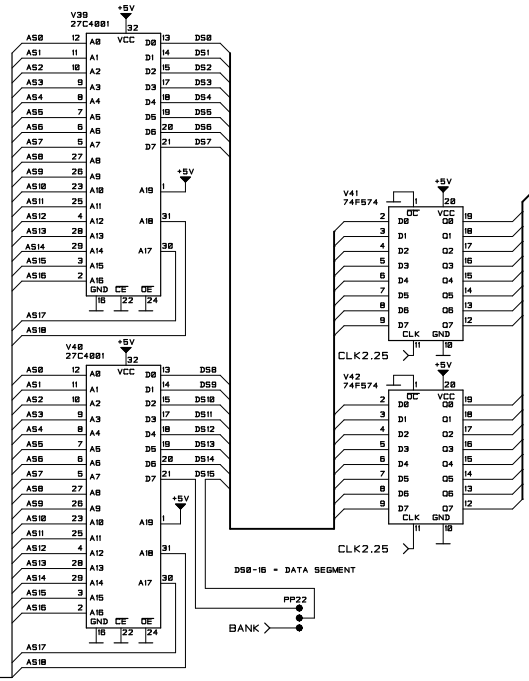

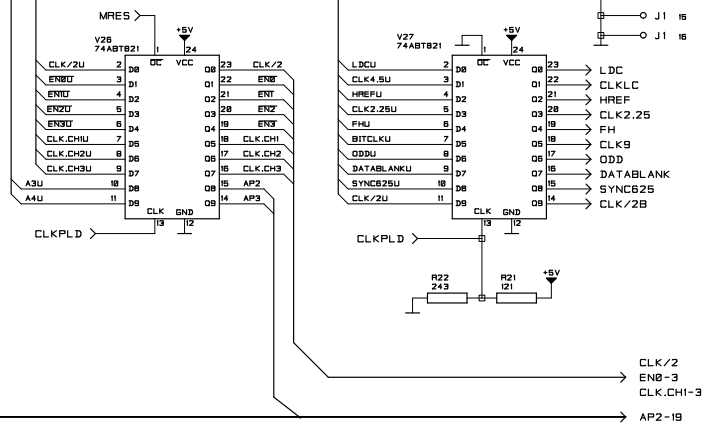

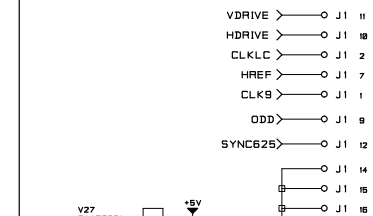

CLK/2
EN0-3
CLK.CH1-3
AP2-19

V21-V50
Q21-Q29
R21-R49
C71-C90
Q11-Q19

FIRST USED IN: HDTV GENERATOR
PCB REF.: 4008 117 05443

HDTV GENERATOR SEGMENT & PLL	4008 109 7755	3	94-03-24
		3	93-~~08~~-12
		3	93-02-23
CHECK:	NAME: GBG /NHA/JML	7 SH SH 130 - 2	3 93-~~01~~-15
BCDEFGA77553 .SCM A05443 .PCB	KU PHILIPS TV TEST EQUIPMENT DK-2605 BRØNDBY	DAT 91-10-25	A3L

MEMORY BANK 1

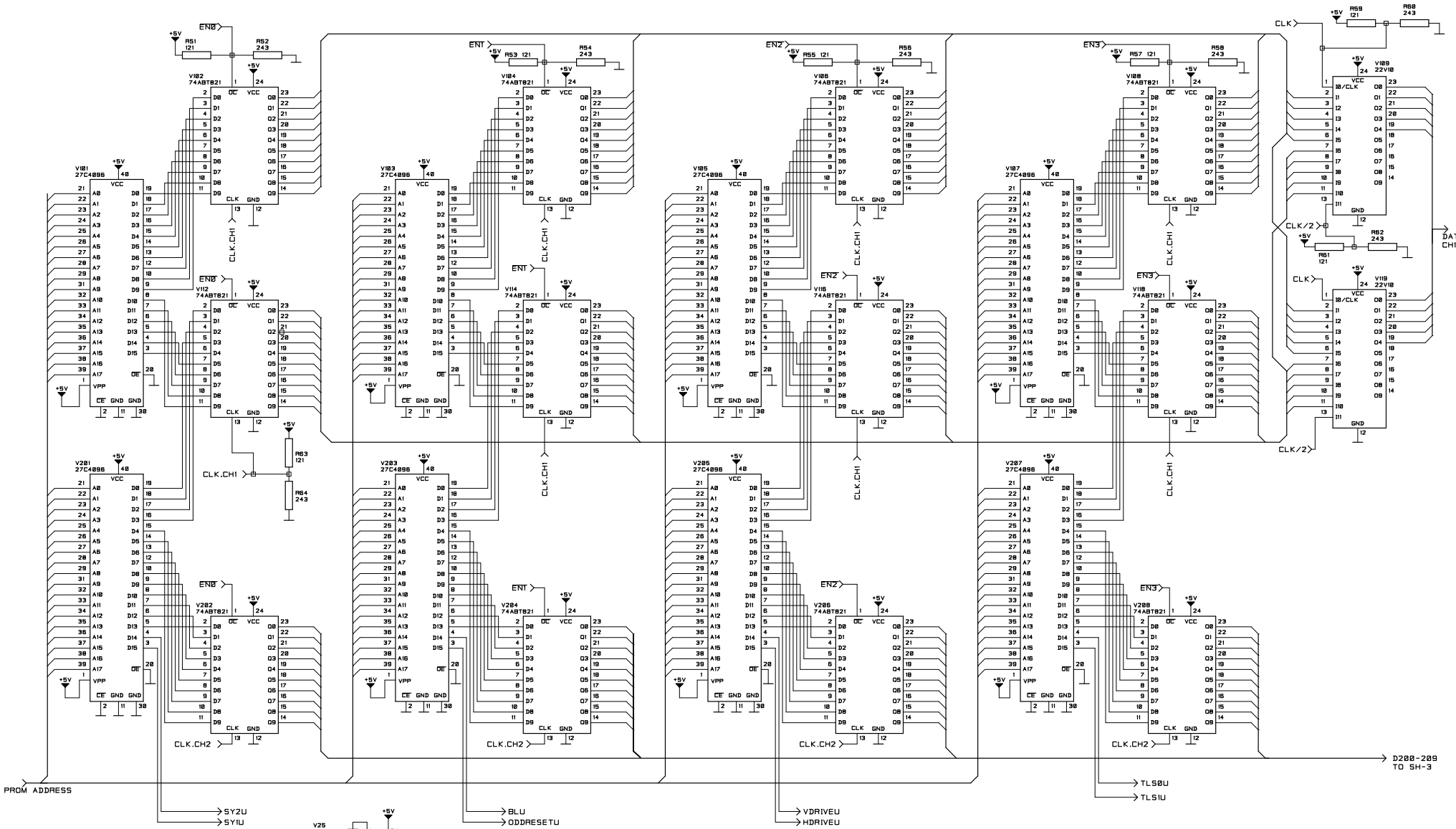

PROPERTY OF PHILIPS ELEKTRONIK INDUSTRI A/S
ALL RIGHTS STRICTLY RESERVED.

FIRST USED IN: HDTV GENERATOR
PCB REF.: 4008 119 05444

	HDTV GENERATOR MEMORY BANK 1	4008 109 7755	3	94-03-24
			2	92-11-10
			1	93-01-08
CHECK:	NAME: GBG/JML	7 SH SH 130 - 3	3	93-02-23
CDEFGA877553SCM A05444.PCB	KU PHILIPS TV TEST EQUIPMENT DK-2605 BRØNDBY	DAT. 91-10-19	A3L	

MEMORY BANK 2

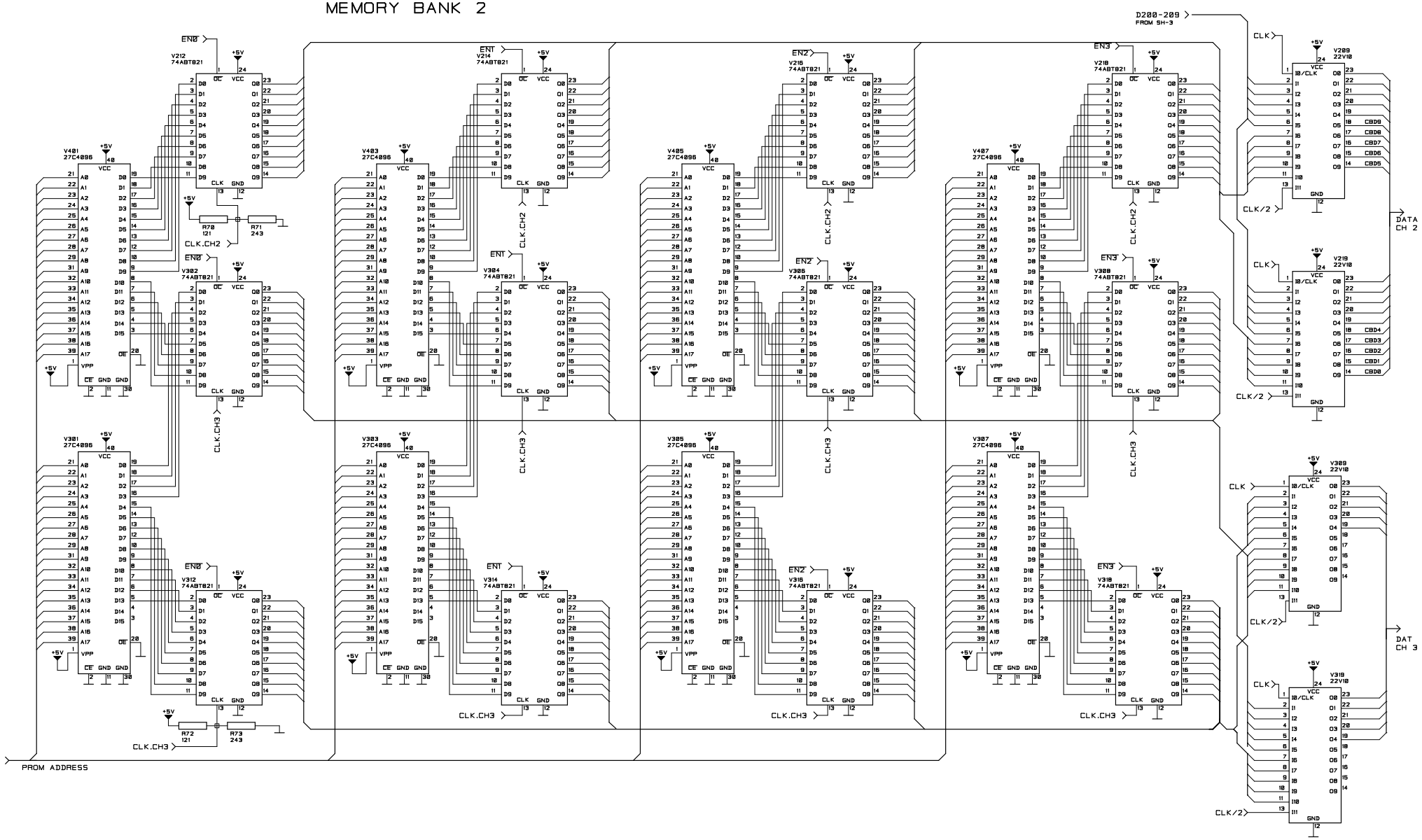

PROPERTY OF PHILIPS ELEKTRONIK INDUSTRI A/S
ALL RIGHTS STRICTLY RESERVED.

FIRST USED IN: HDTV GENERATOR
PCB REF.: 4008 119 05444

	HDTV GENERATOR MEMBANK 2	4008 109 7755	3	94-03-24
			2	~~93-01-08~~
			3	93-02-23
CHECK:	NAME: GBG/JML	7 SH SH 130 - 4	3	~~92-10-03~~
DEFGABC77553.SCM A05444.PCB	KU PHILIPS TV TEST EQUIPMENT DK-2605 BRØNDBY	DAT. 91-10-19	A3L	

PROPERTY OF PHILIPS TV TEST EQUIPMENT A/S
ALL RIGHTS STRICTLY RESERVED.

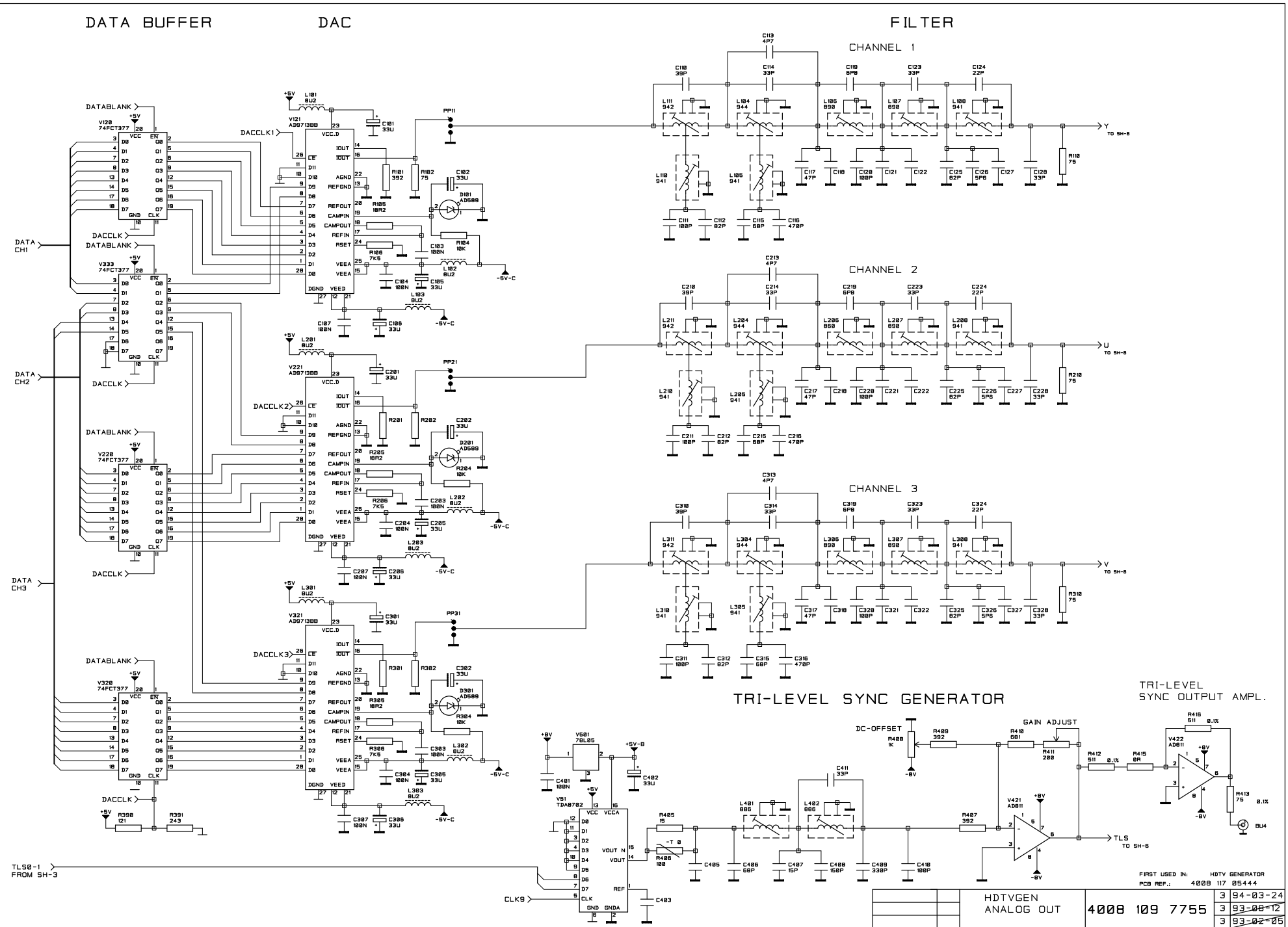

PROPERTY OF PHILIPS TV TEST EQUIPMENT A/S
ALL RIGHTS STRICTLY RESERVED.

AMPL. + SIN X/X CORR.

AMP. CH1

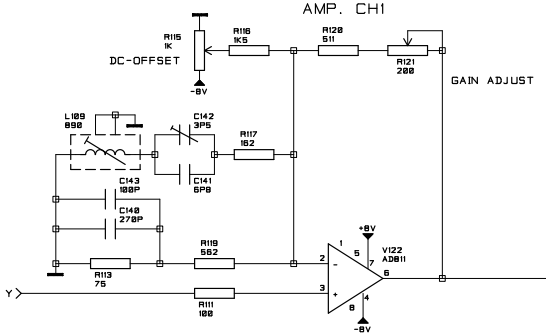

AMP. CH2

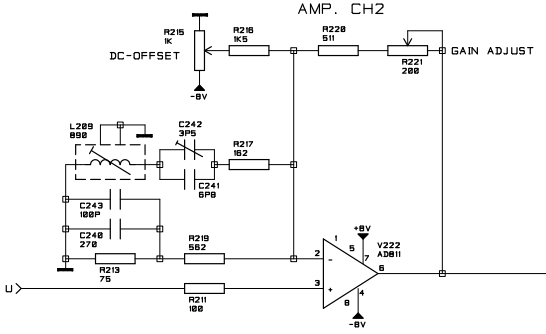

AMP. CH3

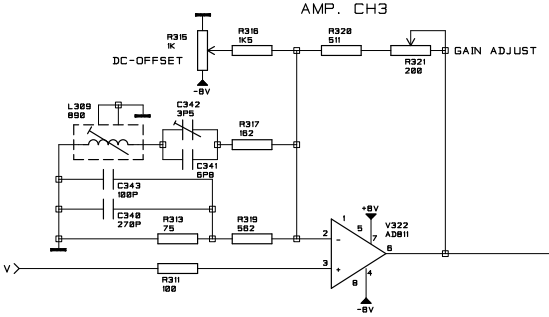

MATRIX & OUTPUT AMPL.

Y/G OUTPUT AMPL.

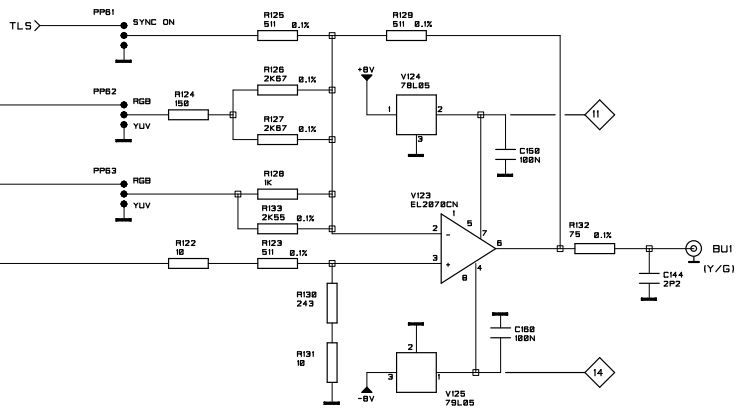

U(Cb)/B OUTPUT AMPL.

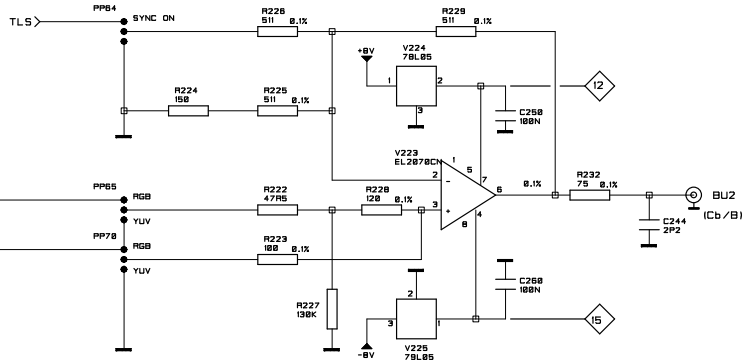

V(Cr)/R OUTPUT AMPL.

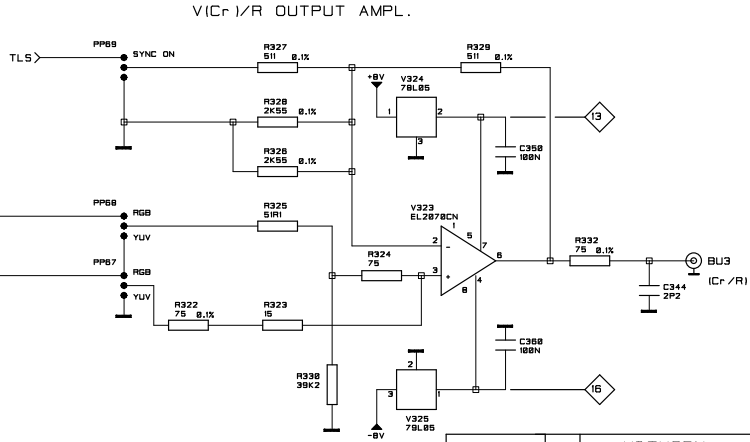

FIRST USED IN: HDTV GENERATOR
PCB REF.: 4008 117 05444

	HDTVGEN ANALOG OUT	4008 109 7755	3	94-03-24
			3	93-03-01
			3	93-03-23
CHECK:	NAME: GBG/NHA/JML/GBg/JML	7 SH SH 130 - 6	3	93-02-24
FGABCDE77553.SCM A05444.PCB	KU PHILIPS TV TEST EQUIPMENT DK-2605 BRØNDBY	DAT. 91-09-24	A3L	

PROPERTY OF PHILIPS ELEKTRONIK INDUSTRI A/S
ALL RIGHTS STRICTLY RESERVED.

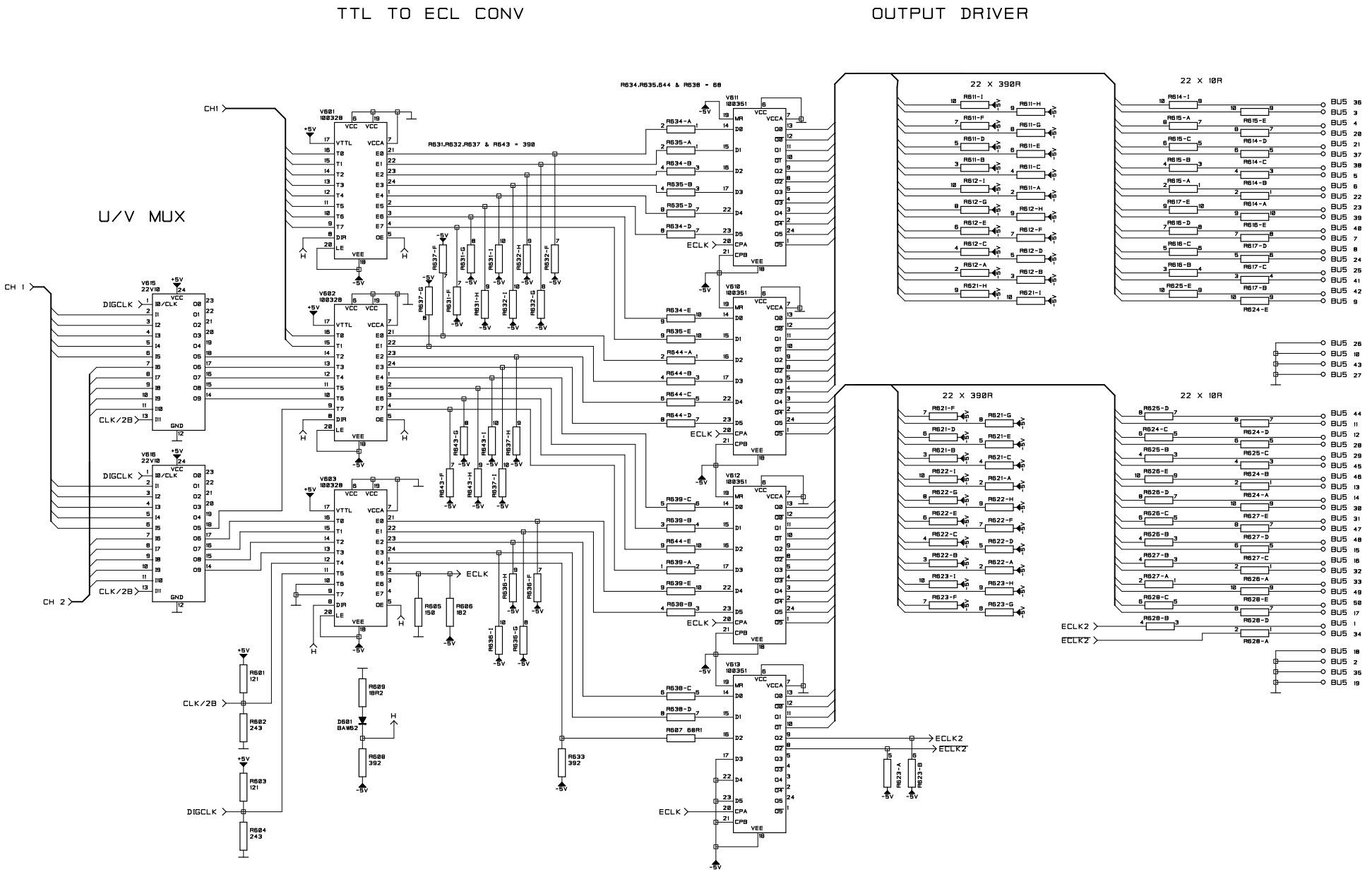

FIRST USED IN: PM5644HD
PCB REF.: 4008 117 05444

	HDTV GENERATOR DIGITAL OUT	4008 109 7755	3	94-03-24
			2	~~91-11-10~~
			3	~~93-01-03~~
CHECK:	NAME: GBG/SNJ/JML	7 SH SH 130 - 7	3	~~93-02-23~~
GABCDEF77553 .SCM A05444 .PCB	KU PHILIPS TV TEST EQUIPMENT DK-2605 BRØNDBY	DAT. 91-11-23	A3L	