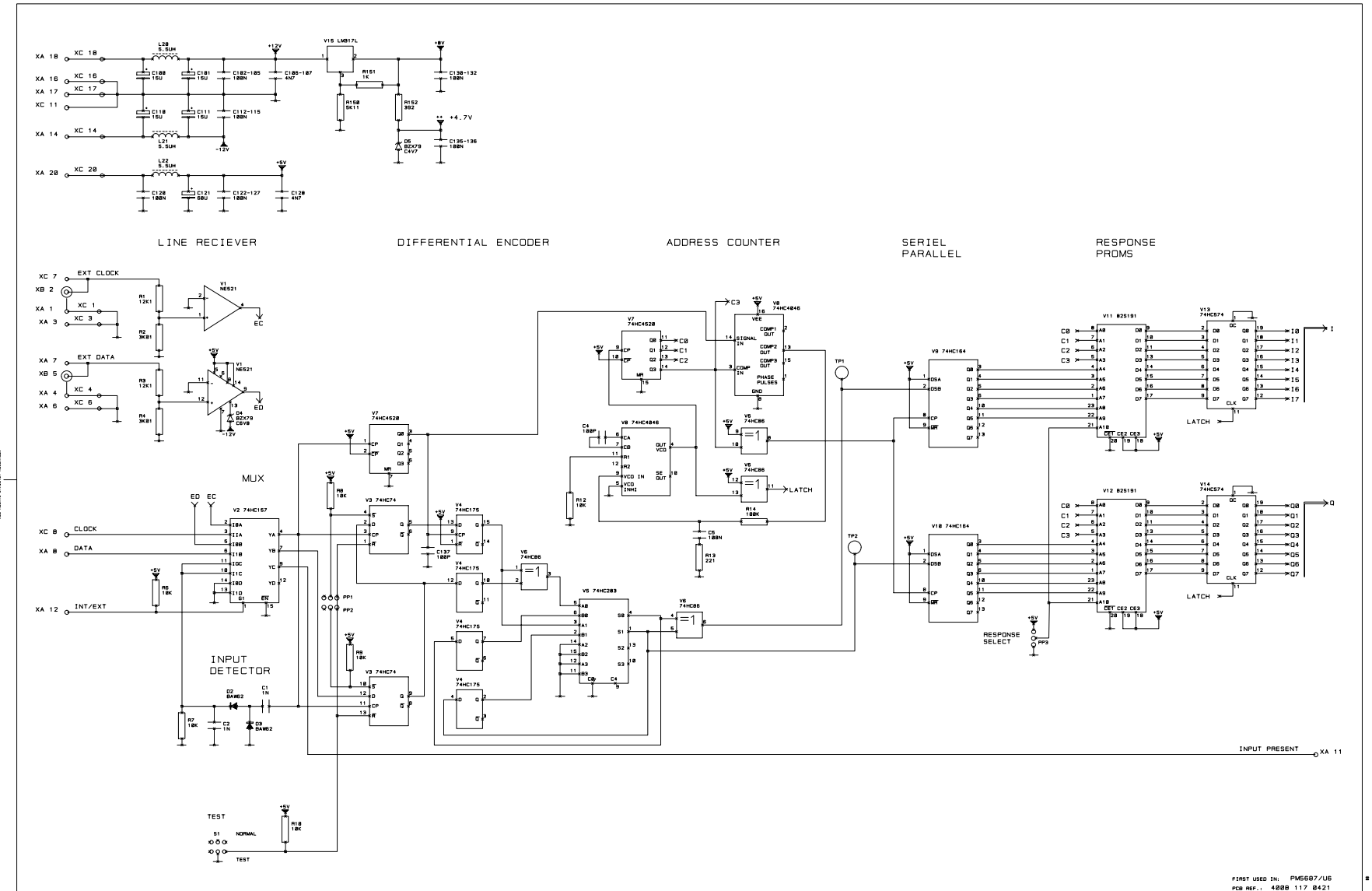

FIRST USED IN: PM5687/U5
PCB REF.: 4008 117 0421

CX99202.SCM AB99203.SCM ABCX .PCB 84211 .PCB	QPSK MODULATOR	4008 108 9920	.1 .2 .3	88-01-27 88-05-16 94-02-23
NAME GN/SMa		4 SH SH - 130 - 1	.	
KF PTV LAB PEI BOX1818 DK-2300 COPENHAGEN S		DAT 87-05-11		A3L

PROPERTY OF PHILIPS ELECTRONIX INDUSTRIE A/S
ALL RIGHTS STRICTLY RESERVED.

20.74 75%

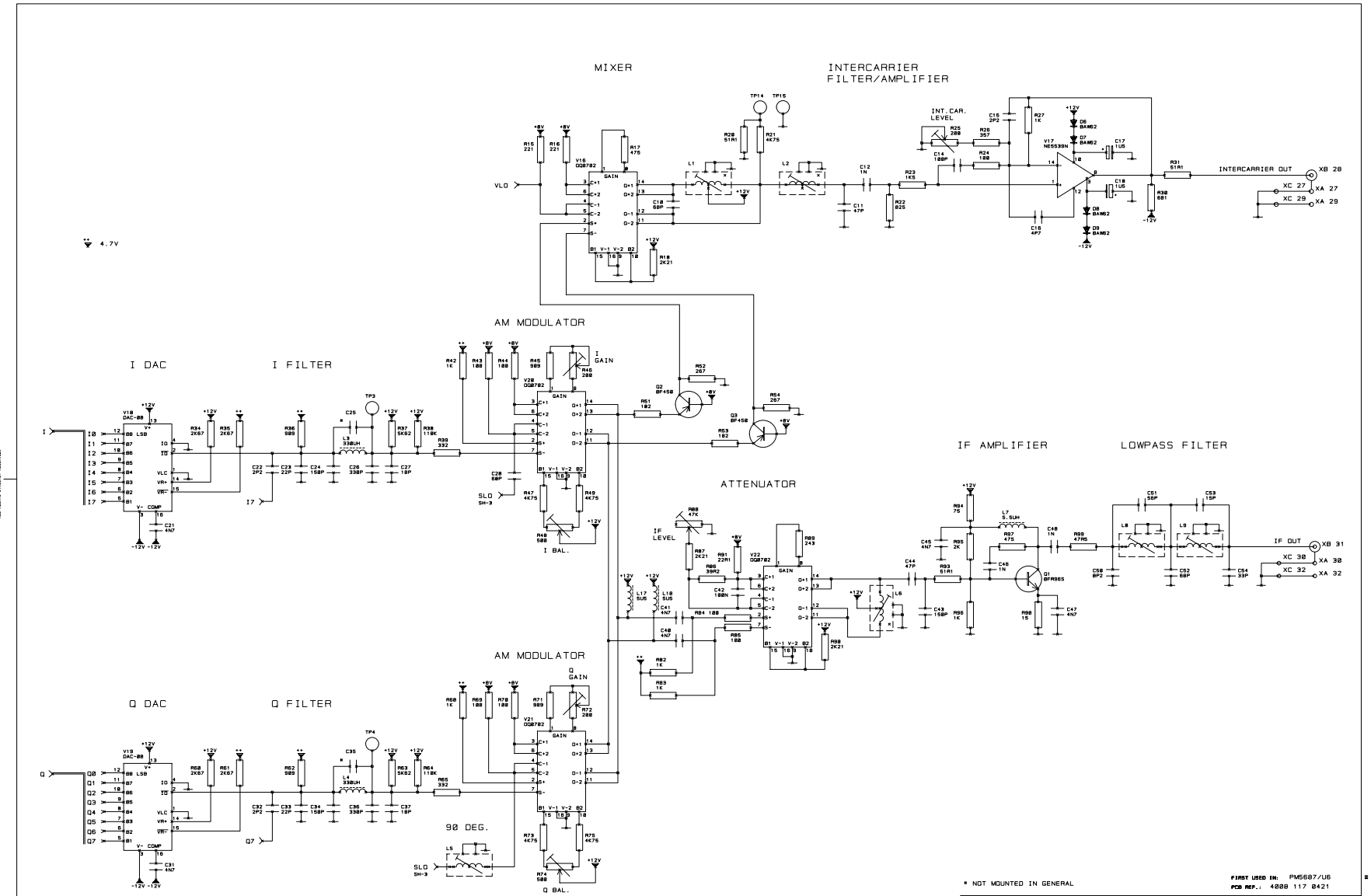

PROPERTY OF PHILIPS ELECTRONIX INDUSTRIE A/S
ALL RIGHTS STRICTLY RESERVED.

* NOT MOUNTED IN GENERAL

FIRST USED IN: PM5687/U5
PCB REF.: 4008 117 0421

CX9202.SCM BA9203.SCM ABCX .PCB 84211 .PCB	QPSK MODULATOR	4008 108 9920	.1	87-11-05
			.2	88-05-16
			.3	94-02-23
NAME GN/SMa	4 SH	SH - 130 - 2	.	
KF PTV LAB PEI BOX1818 DK-2300 COPENHAGEN S		DAT 87-05-11		A3L

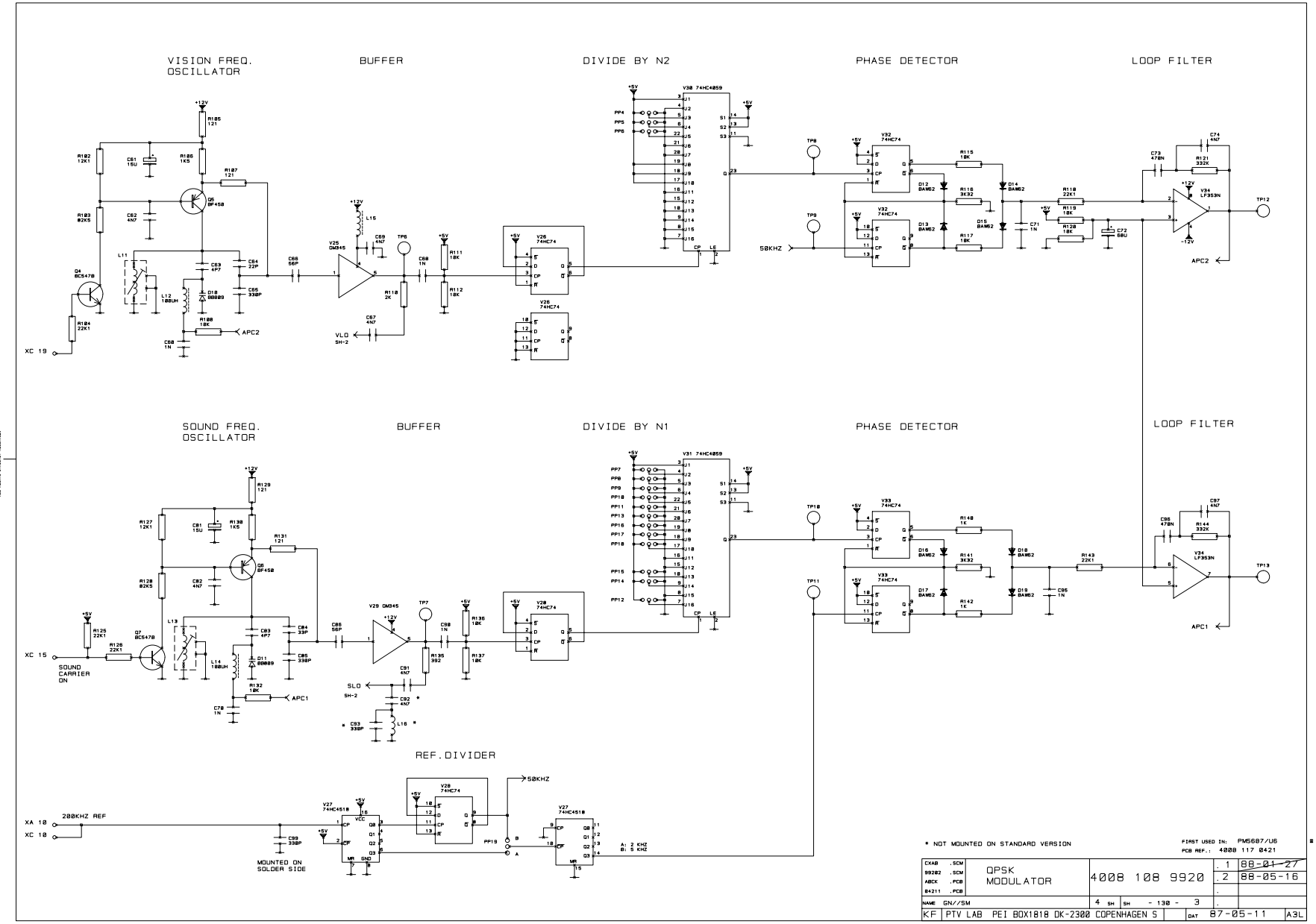

PROPERTY OF PHILIPS ELECTRONIX INDUSTRIE A/S
ALL RIGHTS STRICTLY RESERVED.