www.freeservicemanuals.info 1/19/2025

PALplus Test Pattern Generator
PM 5644

Instruction Manual

9499 493 09711
950815/01

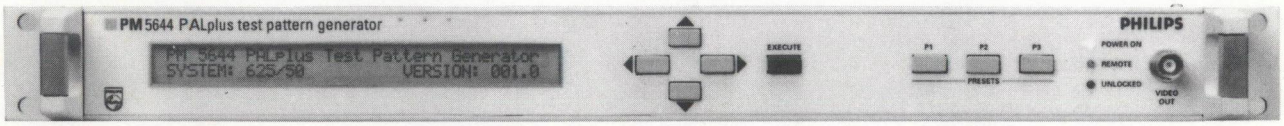

Philips
TV Test
Equipment

PHILIPS

Digitized in Heiloo the Netherlands Not for sale!

www.freeservicemanuals.info 1/19/2025

Important

In correspondence concerning this instrument, please quote the full type and KU. number (serial number) as shown on the identification plate on the rear of the instrument.

Training

Courses of technical training on this, and other current PTV equipment are available either on a pre-planned basis, or to suit individual requirements.

These courses are held in English.

For details of location, time and duration of pre-planned courses, or the possibilities that exist for individually planned courses, please complete the form on the next page and return it to the Philips Customer Support Organization in your country.

Or contact:

Philips TV Test Equipment A/S
Kornmarksvej 21
DK - 2605 Brøndby
Denmark
Tel.: +45 3288 5911 - Fax: +45 4343 2390

Fault analysis

In the event of instrument failure, please complete the "Fault Analysis report" situated in Chapter - Service hints of this manual. After completion, please send it to the Philips Customer Support Organization in your country.

© PHILIPS TV TEST EQUIPMENT A/S - DENMARK -1995

Printed in Denmark

Digitized in Heiloo the Netherlands Not for sale!

www.freeservicemanuals.info

Request for Training

Recent advances in equipment design and our commitment to the use of leading edge technology has placed increasing demands on servicing personnel world-wide. While we make every effort to ensure that our manuals reflect these advances (at the same time remaining service oriented), the need for effective and regular training has become more and more necessary.
Tailor-made courses of instruction on current PTV instruments are therefore being made available to complement the information contained in our manuals. Participation will inevitably lead to reduced down-time and repair costs.
If you are interested in our training program or just require information, please complete the information sheet below, and send it to the Philips Customer Support Organization in your country who will contact you and provide more detailed information for your consideration.

We require information only : ☐

Company Name : _____

Address : _____

_____

_____

We like training on the following instruments :

PM _____ PM _____ PM _____ PM _____

PM _____ PM _____ PM _____ PM _____

Type of course required :
Systems/Applications ☐

Servicing/Faultfinding ☐

Other (please specify below) ☐

_____

Number of participants (max. 12): ☐

Time available (days): ☐

Location :
On my own premises ☐

At Philips Customer Support ☐

In Copenhagen ☐

Please send this request to the Philips Customer Support Organization in your country. Thank you.

Digitized in Heiloo the Netherlands
Not for sale!

www.freeservicemanuals.info 1/19/2025

Table of Contents

GENERAL INFORMATION

1. Safety 1-1
1.1 Introduction 1-1
1.2 Safety Precautions 1-1
1.3 Caution and Warning Statements 1-1
1.4 Impaired Safety Protection 1-1
1.5 Electrostatic Sensitive Devices 1-1
2. Introduction and Applications 2-1
2.1 General Information 2-1
2.2 Signals 2-1
2.3 Wide Screen Signalling Codes 2-1
2.4 Vertical Interval Test Signals 2-2
2.5 Special Features, Non-Standard Operation 2-2
2.6 Applications 2-2
3. Product Data 3-1
3.1 Safety Characteristics 3-1
3.2 Performance Characteristics 3-1
3.3 Versions 3-1
3.4 General Signal Specification 3-1
3.5 Outputs 3-2
3.6 Inputs 3-2
3.7 Controls and Menu Selections 3-2
3.8 Wide Screen Signalling 3-3
3.9 Signal Specification 3-4
3.10 Sync Generator Specification 3-9
3.11 Environmental Conditions 3-9
3.12 Power Supply 3-10
3.13 Mechanical Data 3-10
3.14 Options 3-10
4. Accesories and Options 4-1
4.1 Accessories 4-1
4.2 Options 4-1

INSTALLATION AND OPERATING INSTRUCTIONS

5. Installation 5-1
5.1 Initial Inspection 5-1
5.2 Safety Instruction 5-1
5.3 Mains Voltage Setting and Fuses 5-1
5.4 Rack Mounting 5-2
5.5 Access to and Replacement of Parts 5-3

Digitized in Heiloo the Netherlands Not for sale!

www.freeservicemanuals.info 1/19/2025

Digitized by www.freeservicemanuals.info 2025

6. Configuration 6-1
6.1 General Information 6-1
6.2 Configuration of Pulse Outputs 6-1
6.3 Trig Out 6-1
6.4 Synchronization 6-1
6.5 Other Controls 6-1
7. Operating Instructions 7-1
7.1 Front Panel Controls 7-1
7.2 Display Information 7-2
7.3 Front Panel Indicators 7-3
7.4 Front Panel Connections 7-3
7.5 Rear Panel Connections 7-3
7.6 Panel Operation 7-4
7.7 Detailed Description of Menus 7-6
8. Remote Control 8-1
8.1 Programming Syntax 8-1
8.2 IEEE Operation 8-5
8.3 RS232/V24 Operation 8-9
8.4. Programming Commands 8-13

SERVICE INSTRUCTIONS

9. General Information 9-1
9.1 Use of the Service Instructions 9-1
9.2 Safety 9-1
9.3 Block Diagram Symbols Description 9-1
10. Wiring Diagram 10-1
11. Instrument Block Diagram Description 11-1
11.1 General Information 11-1
11.2 Master Control Block - Unit 1 11-1
11.3 The Sync Pulse Generator (SPG) 11-1
11.4 The Pattern Generator - Unit 2 11-3
11.5 Front Panel Unit 11-5
11.6 Power Supply - Unit 1 11-5
12. Performance Check 12-1
13. Test and Adjustments 13-1
13.1 Voltage Checks 13-1
13.2 Adjustments, Power Supply - Unit 1 13-2
13.3 Adjustments, Generator Board - Unit 2 13-2
13.4 Filter Adjustment 13-3
14. RS232/V24 Interface - PM 8551/20 14-1
14.1 General Information 14-1
14.2 Test and Adjustments 14-1
15. IEEE-488 Interface - PM 8551/30 15-1
15.1 General Information 15-1
15.2 Test and Adjustments 15-1
16. Service Hints 16-1
16.1 Maintenance 16-1
16.2 Calibration Survey 16-1

Digitized in Heiloo the Netherlands Not for sale!

www.freeservicemanuals.info 1/19/2025

17. List of Mechanical Parts 17-1
18. List of Electrical Parts 18-1
19. List of Recommended Spares Parts. 19-1

APPENDICES

Appendix A - Tables A-1
A.1 Test Signals and Test Patterns A-1
A.2 Error Codes During Power Up Sequence A-1
A.3 WSS Codes A-2

Digitized in Heiloo the Netherlands Not for sale!

www.freeservicemanuals.info 1/19/2025

Subject Index

A

Accesories and Options 4-1
Access to and Replacement of Parts 5-3
Adjustments 13-2
Applications 2-2

B

Block Diagram Symbols Description 9-1

C

Calibration Survey 16-1
Caution and Warning Statements. 1-1
Configuration 6-1
Configuration of Pulse Outputs. 6-1
Controls and Menu Selections 3-2

D

Detailed Description of Menus 7-6
Display Information. 7-2

E

Electrostatic Sensitive Devices. 1-1
Environmental Conditions. 3-9
Error Codes During Power Up Sequence. A-1

F

Filter Adjustment. 13-3
Front Panel Connections 7-3
Front Panel Controls. 7-1
Front Panel Indicators. 7-3
Front Panel Unit 11-5

G

General Information 2-1, 11-1
General Signal Specification 3-1

I

IEEE-488 Interface - PM 8551/30. 15-1
IEEE Operation. 8-5
Impaired Safety Protection 1-1
Initial Inspection 5-1
Inputs 3-2
Installation. 5-1
Instrument Block Diagram Description 11-1
Introduction and Applications 2-1

Digitized in Heiloo the Netherlands Not for sale!

www.freeservicemanuals.info 1/19/2025

Digitized by www.freeservicemanuals.info 2025

L

List of Electrical Parts 18-1
List of Mechanical Parts 17-1
List of Recommended Spares Parts 19-1

M

Mains Voltage Setting and Fuses 5-1
Maintenance 16-1
Master Control Block - Unit 1 11-1
Mechanical Data 3-10

O

Operating Instructions 7-1
Options 3-10, 4-1
Other Controls 6-1
Outputs 3-2

P

Panel Operation 7-4
Pattern Generator - Unit 2 11-3
Performance Characteristics 3-1
Performance Check 12-1
Power Supply 3-10, 11-5
Product Data 3-1
Programming Commands 8-13
Programming Syntax 8-1

R

Rack Mounting 5-2
Rear Panel Connections 7-3
Remote Control 8-1
RS232/V24 Interface - PM 8551/20 14-1
RS232/V24 Operation 8-9

S

Safety 1-1, 9-1
Safety Characteristics 3-1
Safety Instruction 5-1
Service Hints 16-1
Signal Specification 3-4
Signals 2-1
Special Features, Non-Standard Operation 2-2
Sync Generator Specification 3-9
Sync Pulse Generator (SPG) 11-1
Synchronization 6-1

T

Tables A-1
Test and Adjustments 13-1

Digitized in Heiloo the Netherlands Not for sale!

www.freeservicemanuals.info 1/19/2025

Test Signals and Test Patterns. A-1
Trig Out. 6-1

U

Use of the Service Instructions. 9-1

V

Versions 3-1
Vertical Interval Test Signals 2-2
Voltage Checks. 13-1

W

Wide Screen Signalling 3-3
Wide Screen Signalling Codes. 2-1
Wiring Diagram. 10-1
WSS Codes A-2

Digitized in Heiloo the Netherlands Not for sale!

www.freeservicemanuals.info 1/19/2025

GUARANTEE STATEMENT

The Philips guarantee is in addition to all rights which buyer may have against his supplier under the sales agreement the buyer and the supplier and according to local legislation.

Philips guarantees this product to be free from defects in material and workmanship under normal use and service for a period of one (1) year from the date of shipment. This guarantee does not cover possible required re-calibration and/or standard maintenance actions. This guarantee extends only to the original purchaser and does not apply to fuses, batteries or to any product or part thereof that has been misused, altered or has been subjected to abnormal conditions of operation and handling.

Philips - supplied software is guaranteed to be properly recorded on non-defective media. We will replace improperly recorded media without charge for 90 days after shipment upon receipt of the software. Our software is not guaranteed to be error free.

Philips' obligation under this guarantee is limited to have repaired or replace a product that is returned to an authorized Philips Service Centre within the guarantee period, provided that Philips determines that the product is defective and that the failure has not been caused by misuse, alteration or abnormal operation.

Guarantee service for products installed by Philips will be performed at the Buyer's facility at no charge within Philips' service travel area; outside this area guarantee service will be performed at the Buyer's facility only upon Philips' prior agreement and the Buyer shall pay Philips round trip travel expenses.

If a failure occurs, send the product, freight prepaid to the Service Centre designated by Philips with a description of the difficulty. At Philips' option, repairs will be made or the product will be replaced. Philips shall return the product, F.O.B. Repair Centre, transportation prepaid, unless the product is to be returned to another country, in which case the Buyer shall pay all shipping charges, duties and taxes.
Philips assumes NO risk for damage in transit.

DISCLAIMER

The forgoing guarantee is exclusive and is in lieu of all other guarantees, expressed or implied, including but not limited to any implied guarantee or merchantability, fitness, or adequacy for any particular purpose or use. We shall not be liable for any direct, indirect, special incidental, or consequential damages, whether based on contract, tort, or otherwise.

Some countries or states do not allow the foregoing limitations. Other rights may also vary.

Digitized in Heiloo the Netherlands Not for sale!

www.freeservicemanuals.info 1/19/2025

Digitized by www.freeservicemanuals.info 2025

GENERAL INFORMATION

Digitized in Heiloo the Netherlands Not for sale!

www.freeservicemanuals.info

1. Safety

Read this chapter carefully before installation and use of the instrument.

1.1 Introduction

The instrument described in this manual is designed to be used by properly-trained personnel only. Adjustment, maintenance and repair of the exposed equipment shall be carried out only by qualified personnel who are aware of hazards involved.

1.2 Safety Precautions

For the correct and safe use of the instrument, it is essential that both operating and servicing personnel follow generally accepted safety procedures in addition to the safety precautions specified in this manual. Specific warning and caution statements, where applicable, are found throughout this manual. Warning and caution statements and/or symbols are marked on the instrument where necessary.

1.3 Caution and Warning Statements

Caution
Used to indicate correct operation or maintenance in order to prevent damage to, or destruction of equipment or other property.

Warning
Used to indicate a potentional hazard that requires correct procedures or practices in order to prevent personal injury.

1.4 Impaired Safety Protection

Whenever it is likely that safe operation is impaired, the instrument must be made in-operative and secured against unintended operation. The appropriate servicing authority must be informed.

For example, safety is likely to be impaired if the instrument fails to perform the intended measurements or shows visible damage.

1.5 Electrostatic Sensitive Devices

All ICs and many other semi-conductors are susceptible to electrostatic discharges (ESD). Careless handling during repair can reduce lifetime drastically.

When repairing, make sure that you are connected to the same potential as the mass of the set via a wrist wrap with resistance. Keep components and tools also at this potential.

ATTENTION

Digitized in Heiloo the Netherlands
Not for sale!

www.freeservicemanuals.info 1/19/2025

Digitized by www.freeservicemanuals.info 2025

1.6 Symbols

Symbol:	Color:	Explanation:
	Red	High voltage terminal: a terminal at which a voltage, with respect to another terminal or parts exists or may be adjusted to 1000V or more. (High voltage≥1000V).
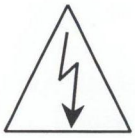	Black/Yellow	Live part
	Black/Yellow	To preserve the instrument from damage the operator must refer to an explanation in the instruction manual.

Digitized in Heiloo the Netherlands Not for sale!

www.freeservicemanuals.info

2. Introduction and Applications

2.1 General Information

The PM 5644 PALplus Test Pattern Generator is a self-contained instrument designed to generate PALplus test patterns and signals fully complying with standards. Special PALplus test patterns for a thoroughly test of PALplus receivers are also available.

Also included are standard PAL testcards in 4:3 and 14:9 format as well as special signals for test of the PALplus compatibility of transmitters.

The generator contains patterns that explore the various modes, including film and camera modes in 16:9 and a conventional 4:3 PAL signal. It also tests the switching to correct display format through the wide-screen signalling bits; special helper test signals enable the evaluation of PALplus signal reconstruction.

The Sync Pulse Generator (SPG) has black/white genlock capability, and if there is no synchronization signal it functions as a stand-alone master sync generator, with all timings controlled by a highly stable Oven-Controlled Crystal Oscillator (OCXO). A composite sync output is provided together with a trigger pulse for the helper area.

Operation of PM 5644 PALplus is by means of menu controlling buttons and an LCD display. Built-in security measures prevent unauthorized access to programming or change of vital operational functions.

Favorite signals and combinations can conveniently be stored in separate memory locations, which allows access with just the touch of a button.

An optional remote interface - IEEE488 or RS232 - enhances the flexibility of the instrument. This simplifies integration with automatic test systems, but broadcasters can also benefit from the easy-to-operate remote control facilities.

2.2 Signals

The signal generation employs high-precision digital-to-analog conversion to ensure optimum signal accuracy and stability. The signal generator uses a 10-bit Digital-to-Analog Converter (DAC) to generate the composite PALplus and PAL signals digitally.

The available signals include patterns for broadcasting as well as specific signals for tests in PALplus TV-set production and development.

PALplus encoded signals and patterns:
- PHILIPS patterns, camera and film mode
- Helper timing test pattern
- Helper amplitude test pattern
- Motion detector test pattern
- Circular zone plate signal

Test signals for transmission of PALplus (PAL encoded):
- Linesweep signal
- Modulated staircases

Conventional PAL signals and patterns:
- PHILIPS pattern in 4:3 format
- PHILIPS pattern cropped to 14:9 (center)
- PLUGE signal

2.3 Wide Screen Signalling Codes

The first half of line 23 has been specified by ITU for control of the processing in the receiver. This enables the receiver to select film or camera mode processing, colour decoding principle, position of subtitling, etc. to achieve optimum picture quality.

The Wide Screen Signalling bits are normally fixed, and according to standards and following the selected pattern or signal. In the PM 5644 PALplus generator, these codes are programmable for all

Digitized in Heiloo the Netherlands Not for sale!

www.freeservicemanuals.info 1/19/2025

Digitized by www.freeservicemanuals.info 2025

the aspect ratios. For the main 16:9 and 4:3 format, additional bits can be set according to user requirement.

2.4 Vertical Interval Test Signals

As a part of the complete TV - signal, standard test lines are also installed in fixed positions but can be switched off.

The VITS includes:

- Standard CCIR rec.473-5 test lines: CCIR line 17, 18, 330, and 331.
- Ghost Cancelling Reference (GCR) signal for the 625-line TV - system as specified in Recommendation ITU-R BT.1124.
- A fixed teletext signal, located in line 15 which enables testing of subtitling by teletext.

2.5 Special Features, Non-Standard Operation

The standard setting of the generator includes all the specified elements for the PALplus, but for special testing it is possible to "destroy" the correct signal. In addition to changing to incorrect WSS - codes, the user can also control the following:

- PALplus references in the second half of line 23 (reference for helper amplitude setting)
- PALplus references in the first half of line 623 (reference for the luminance gain).
- The presence of the helper signal.
- The presence of the letterbox (the fundamental video information).

Only the second half of line 23 and the first half of line 623 of normal PAL signals can be switched to black.

2.6 Applications

The PM 5644 PALplus test pattern finds its applications in the following main areas:

- Setmaker production
- Research and development
- Broadcast main terminals
- PTT network switching centers
- TV transmitters
- CATV headends

The PM 5644 PALplus generates the well-known PHILIPS circle pattern in PALplus format. This test pattern has been transmitted by many broadcasters and cable operators for years. It also generates specific PALplus test signals, which enable a quick check of the signal quality in TV transmission and reception, thus meeting the demands of broadcasters and PTT administrations.

The PHILIPS test pattern was originally conceived to provide the maximum amount of information at the point of reception, but at the same time also presents the identification of the program provider. The PHILIPS test pattern has been used for a long time by setmakers in final quality checks, and the test pattern is also typically distributed throughout factories for general use. Broadcast operators and PTT's can make use of the special test signal for preparing their networks for the PALplus signals.

A number of signals are typically required for PALplus set-makers, laboratories, etc., making the more detailed PALplus testing possible. PALplus makes use of an advanced filtering technique, called **M**otion **A**daptive **C**olour **P**lus (MACP), to separate luminance and chrominance completely. The motion detector test pattern is a dedicated MACP test signal for a visual check whether the processing is working properly.

The Helper timing test signal is useful for adjusting the position of the helper signal relative to the letterbox signal. Correct timing is crucial for reconstruction of the full PALplus signal. Also the Helper amplitude signal is indispensable when securing the full bandwidth for the helper signal. A too narrow bandwidth may result in irregularities and poor response on diagonal lines.

Digitized in Heiloo the Netherlands Not for sale!

www.freeservicemanuals.info

A test of format switching is necessary to ensure correct control of the displayed aspect ratio in the TV - sets. The PALplus receiver (and other TV - sets) will use this code to switch automatically between formats. Thus broadcasters can choose to increase gradually the proportion of programs in PALplus while retaining the ability to broadcast in conventional 4:3 PAL.

Finally, subtitling by teletext is the recommended method of adding subtitles to a PALplus signal, and the ability to test this function together with the associated WSS code is therefore of utmost importance.

Digitized in Heiloo the Netherlands
Not for sale!

www.freeservicemanuals.info 1/19/2025

3. Product Data

3.1 Safety Characteristics

This apparatus has been designed and tested in accordance with the Safety Class I requirements of the IEC Publication 348 (Safety requirements for Electrical Measuring Apparatus), and has been supplied in a safe condition. This manual contains information and warnings which must be followed during operation and service to ensure safety and to retain the apparatus in a safe condition.

3.2 Performance Characteristics

Characteristics expressed in numerical values with stated tolerance are guaranteed tolerances. Specified non-tolerance numerical values indicate typical values at nominal ambient temperature (25°C) and reflects an average performance.

3.3 Versions

Available either with the PHILIPS patterns (PM 5644/85) or the FuBK patterns (PM 5644/86).

3.3.1 Options

PM 8551/20	: Remote interface, RS232
PM 8551/30	: Remote interface, IEEE-488
PM 8552	: Slide rail, rack mounting kit

3.4 General Signal Specification

Luminance amplitude accuracy:
±1 %.
Frequency response:
±1 % up to 5 MHz,
±2 % up to 5.5 MHz.
Pulse-to-bar ratio:
1:1 within 1 %.
Pulse ringing:
less than 1 % peak.
Field tilt:
less than 0.5 %.
Line tilt:
less than 0.5 %.

Sync amplitude:
300 mV ±1 %
Sync rise/fall time:
200 ns ±10 ns
Front porch duration:
1.5 µs ±0.1 µs
Horizontal sync duration:
4.7 µs ±0.1 µs
Vertical serration duration:
4.7 µs ±0.1 µs
Equalising pulse duration:
2.35 µs ±0.05 µs

Burst amplitude:
300 mV_{PP} ±2%
Burst rise/fall time:
275 ns ±15 ns
Burst position:
5.6 µs ±0.1 µs
Burst duration:
2.25 µs ±0.1 µs

Digitized in Heiloo the Netherlands Not for sale!

www.freeservicemanuals.info 1/19/2025

Digitized by www.freeservicemanuals.info 2025

General rise/fall time for luminance and chrominance, except explicitly mentioned under signal description, see paragraph 3.9

Luminance rise/fall time:
200 ns ±10 ns

Chrominance rise/fall time:
275 ns ±15 ns

Spurious signals:
below -55 dB referred to 1 V for frequencies up to 5.5 MHz,
below -50 dB referred to 1 V for frequencies from 5.5 MHz and upwards.

3.5 Outputs

3.5.1 Video Outputs

Connectors:
2 x BNC on rear panel, 1 x BNC on front panel

Impedance:
75 Ω ±0.5 %

Return loss:
> 36 dB up to 5 MHz

Amplitude accuracy:
better than 1 %

3.5.2 Sync Output

Connector:
1 x BNC on rearplate

Return loss:
30 dB up to 4 MHz

Rise/fall time:
200 ns ±30 ns

Horizontal sync duration:
4.7 µs ±0.1 µs

Vertical serration duration:
4.7 µs ±0.1 µs

Equalising pulse duration:
2.35 µs ±0.05 µs

Amplitude:
4 V ±0.4 V or 2 V ±0.2 V (selectable).

3.5.3 Trigger Output

Line blanking pulses in the lines with PALplus helper signal.

Connector:
1 x BNC on rearplate.

Amplitude:
2 V in 75 Ω

Line blanking width:
-1.2 µs to 9.6 µs relative to sync leading edge

Polarity:
positive or negative (internally selectable)

3.6 Inputs

3.6.1 External Sync Input

The input signal for external synchronization may be either a composite video signal or a mixed sync signal. The generator is only locking to the black/white sync information.

Connector:
2 x BNC

Impedance:
75 Ω loop-through

Return loss:
> 36 dB up to 5 MHz

Input level:
0.5 V_{PP} to 4 V_{PP} with up to 100 % or 1 V_{PP} hum

3.7 Controls and Menu Selections

3.7.1 Controls

Pushbuttons for menu selections: 4 cursor buttons and 1 EXECUTE button.
Direct recall of 3 stored signals by pushbutton selection.

Digitized in Heiloo the Netherlands Not for sale!

www.freeservicemanuals.info 1/19/2025

3.7.2 Menu Selections

- Selection of main type of signal
- Modifications to the PALplus signal:
  - Helper On/Off
  - Letterbox On/Off
  - PALplus references On/Off (lines 23b and 623a)
- Modifications to the PAL signals
  - Setting half line to black (line 23b and 623a)
- Selection of WSS-codes for line 23a
- Control of Ghost Reference signal in line 318
- Control of CCIR VITS signals in lines 17, 18, 330, and 331
- Control of embedded Teletext signal in line 15+328
- Genlock function On/Off

3.8 Wide Screen Signalling

The Wide Screen Signalling bits are normally fixed, and according to standards and follows the selected pattern/signal. This default setting can be changed according to the table below:

Aspect Ratio	b0	b1	b2	b3	Programmable bits (0/1)	Fixed bits = 0
Full format 4:3	0	0	0	1	b4: Camera/Film mode b5: Std PAL/MACP b8: No SbT/SbT	b6, b7, b9, b10, b11, b12, b13
Letterbox 14:9 centre	1	0	0	0	b4: Camera/Film mode	b5, b6, b7, b8, b9, b10, b11, b12, b13
Letterbox 14:9 top	0	1	0	0	None	b4, b5, b6, b7, b8, b9, b10, b11, b12, b13
Lettebox 16:9 centre	1	1	0	1	b4: Camera/Film mode b5: Std PAL/MACP b6: No Helper/Mod. Helper b8: No SbT/SbT	b7, b9, b10, b11, b12, b13
Letterbox 16:9	0	0	1	0	None	b4, b5, b6, b7, b8, b9, b10, b11, b12, b13
Letterbox >16:9 centre	1	0	1	1	None	b4, b5, b6, b7, b8, b9, b10, b11, b12, b13
Full format 4:3; shoot and protect 14:9 centre	0	1	1	1	None	b4, b5, b6, b7, b8, b9, b10, b11, b12, b13
Full format 16:9	1	1	1	0	None	b4, b5, b6, b7, b8, b9, b10, b11, b12, b13
Code violation of b3 (Full format 4:3	0	0	0	0	None	b4, b5, b6, b7, b8, b9, b10, b11, b12, b13
Code violation of b3 (Letterbox 14:9 top	0	1	0	1	None	b4, b5, b6, b7, b8, b9, b10, b11, b12, b13

MACP: Motion Adaptive Colour Plus
SbT : Subtitling by Teletext

Digitized in Heiloo the Netherlands Not for sale!

www.freeservicemanuals.info 1/19/2025

Digitized by www.freeservicemanuals.info 2025

3.9 Signal Specification

3.9.1 Pattern Composition, PHILIPS Pattern, 16:9 and 4:3

3.9.1.1 Signals inside the circle

From top to bottom for 16:9 pattern:

Black rectangle on white background.

Black/white and white/black transition with needle pulse in the white part.
Width of pulse:
225 ns ±5 %

250 kHz squarewave signal.
Amplitude:
75 % of white

Colour bar (without white and black).
EBU (100/0/75/0).

Centre cross.
Width of vertical lines:
225 ns ±5 %
Structure of the horizontal line:
2 lines, one per field, sequence reversed compared to the lines of the background cross-hatch.

Multiburst.
Frequencies:
0.8, 1.8, 2.8, 3.8, 4.8, and 5.5 MHz
Amplitude:
100 % of white level

5-riser staircase.

White/black and black/white transitions (bottom text field).

Colour steps.
Yellow/red/yellow.

Circle.
Diameter:
88 % of active picture height.

For pattern with system indentification, additionally:
In bottom text field, "PALplus 16:9"

For 4:3 pattern as above, except:
Multiburst.
Frequencies:
0.8, 1.8, 2.8, 3.8, 4.8 MHz
Amplitude:
100 % of white level

For pattern with system indentification, additionally:
In bottom text field, "PAL 4:3"

3.9.1.2 Colour signals outside the circle

The signals are described as vectors, chrominance amplitude approx. 330 mV.

From left to right:

2 vertical bars with R-Y signals (270° and 90°) and B-Y = 0.

2 rectangles with signal G-Y = 0 (326° and 146°).

and to the right of the circle:

2 rectangles with signal G-Y = 0 (326° and 146°).

2 vertical bars with B-Y signals (0° and 180°) and R-Y = 0.

For 4:3 and 14:9 additionally:
Vertical bar with non-alternating R-Y signals (270°/270°) and B-Y = 0 ("Anti-PAL").
The signals are at some points starting at the extreme left of the picture for burst gate check.

Vertical bar with line-alternating B-Y signals (0°/180°) and R-Y = 0 ("Anti-PAL").

Digitized in Heiloo the Netherlands Not for sale!

www.freeservicemanuals.info

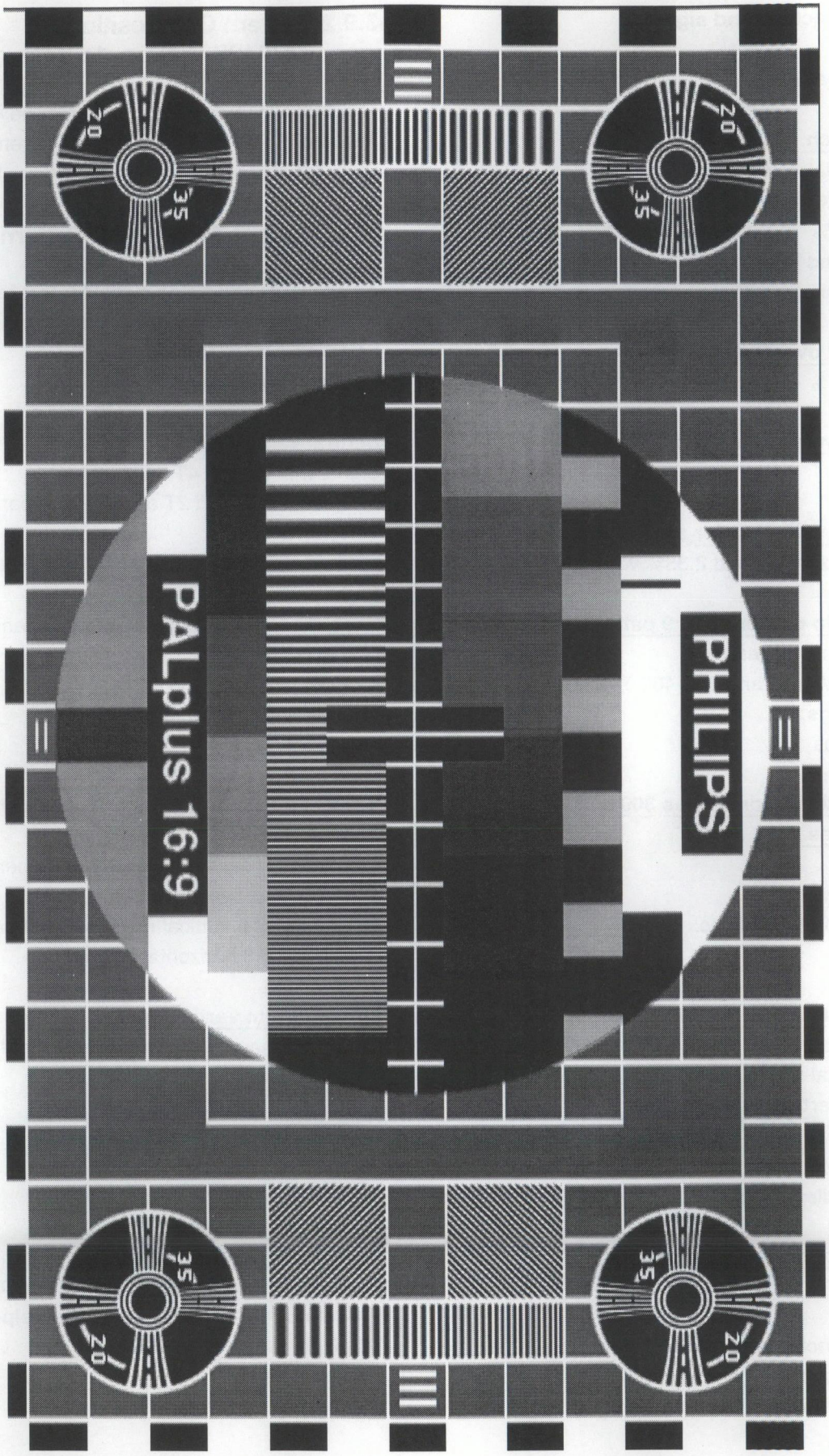

Fig. 3-1 PHILIPS Test Pattern, PALplus, 16:9 format

Digitized in Heiloo the Netherlands
Not for sale!

www.freeservicemanuals.info 1/19/2025

Digitized by www.freeservicemanuals.info 2025

3.9.1.3 Background signals

For 16:9 pattern:

Cross-hatch.
14 horizontal x 24 vertical lines.
Width of vertical lines:
225 ns ±5 %
Background level:
48 % of white

Horizontal overscan marks:
4, 5, and 6%

Vertical overscan marks:
4 and 5%

Black and white border castellation:
2.75% horizontally and 2.35% vertically

Elements in corner of 16:9 pattern:
Resolution wedges:
150-300 TV-lines and 250-400 TV-lines
Centre rings:
300 TV-lines

Blocks with diagonal lines 300 and 200 TV-lines.

Vertical sweep:
300-75 and 75-300 lines.

For 4:3 pattern
Cross-hatch:
14 horizontal x 18 vertical lines.
Width of vertical lines:
225 ns ±5 %
Background level:
48 % of white

Black/white border castellations.

Special functions for the 4:3 pattern:
Line 23 second half and line 623 first half can be switched between video and black.

3.9.2 Pattern Composition, PHILIPS Pattern, 14:9 Centre

The 14:9 PHILIPS pattern is a cropped 4:3 pattern. A total of 504 lines is displayed. The remaining lines (top and bottom) in every field are blanked.

3.9.3 Helper Timing Test Pattern

An artificially generated signal for test of delays between helper and letterbox signal combined with helper frequency test signals.
Pedestal amplitude:
350mV
Central vertical part:
Signal with 2T and 4T in letterbox.
PALplus modulated 2T and 4T in helper area.
Left part:
±350 mV bar, alternating from line to line.
Right part:
Sawtooth (positive/negative slope, alternating from field to field).
From software version 001.1:
positive slope, non alternating

3.9.4 Helper Amplitude Test Pattern

PALplus full field signal for test of helper amplitude and frequency response.
Composed of 6 vertical rows (with different frequencies) by 3 horizontal columns:

Left and right vertical part:
Reference signals, with no helper signal content.
Frequencies:
DC, 0.25, 0.5, 1, 2 and 3 MHz
Pedestal level:
350mV

Central vertical part:
Signal with maximum content of modulated helper.
Baseband video signal line alternating 0/180°
Frequency for modulation of the helper signal:
DC, 0.25, 0.5, 1, 2, and 3 MHz
Pedestal level:
350mV

Black horizontal lines between the different rows.

Digitized in Heiloo the Netherlands Not for sale!

www.freeservicemanuals.info

3.9.5 Motion Detector Test Pattern

Evaluates the MACP function in the PALplus receiver.

Luminance in all frames:
4 MHz sinewave:
700 mV
Vertical marker for V signal:
every 15 mV
Horizontal marker for U signal:
every 20 mV
4 white lines in top and bottom of pattern

Chrominance signal in every other frame
(frame 1 without chrominance)
Colour signal:
in U, V plane
Amplitude of U ramp:
-110 mV to 110 mV (left to right)
Amplitude of V ramp:
-67.5mV to 67.5 mV (top to bottom)
Center marking:
75% red (field 1 and 2)

3.9.6 Circular Zoneplate Signal

Encoding:
PALplus, camera mode
Amplitude:
75%
Frequency range:
Horizontally : 0 - 5.5 MHz
Vertically : 0-312.5 cph

3.9.7 Modulated Staircases

Test signal for evaluation of PALplus compatibility.
Signals only on vertical helper lines:
Lines 24-59, 275-310, 336-371, and 587-622.
The letterbox part is a black signal.

Modulated staircases:
3 modulated staircases,
Frequencies:
1, 2, and 4.43 MHz

Amplitude of the 4 steps:
60, 120, 180, and 300mV PP ; centred around black

3.9.8 Linesweep, 5MHz

Test signal for evaluation of PALplus compatibility.
Signals only on vertical helper lines:
Lines 24-59, 275-310, 336-371, and 587-622.
The letterbox part is a black signal.
Amplitude:
300 mVPP; centred around black
Frequency range:
Linear from 1 to 5 MHz

3.9.9 Other PAL Test Signals

PLUGE
standard type with -2/+2% bars and 4-level greyscale

3.9.10 Specification for the PM 5644/86, FuBK Version

The test cards above are exchanged with the following test cards:

Pattern composition Fubk Pattern 16:9

3.9.10.1 Signals in the middle area

From top to bottom:

Colour Bar (including white and black).
EBU (100/0/75/0).

4-riser staircase.

Center cross.

White/black and black/white transitions.
Rise/fall time:
200 ns ±5 ns.

Digitized in Heiloo the Netherlands Not for sale!

www.freeservicemanuals.info 1/19/2025

Digitized by www.freeservicemanuals.info 2025

Multiburst.
100 % white reference, 1, 2, 3, and 4.43 MHz (f_{SUBC}, G-Y = 0) and 50 % white.
Amplitude:
100 % of white level.

White bar with black triangle.
Max duration of pulse:
1 µs.
Rise/fall time of pulse:
200 ns ±5 ns.

f_{subc} sawtooth.
±(R-Y) starting with 37.5 % of white amplitude (5.4 µs), then descending to 0 % amplitude (16.2 µs).
+(B-Y) starting with 37.5 % of white amplitude (5.4 µs), then descending to 0 % amplitude (16.2 µs).

Circle.
Diameter:
93 % of active picture height.

3.9.10.2 Signals outside the middle area

Cross-hatch.
15 horizontal x 19 vertical lines.
Width of vertical lines:
200 ns ±5 %.
Background level:
25 % of white.

Green and magenta bars at the exterme left and right.

Pattern composition FuBK 4:3

Same as FuBK 16:9, but area of crosshatch background reduced and the Anti-PAL signal is included.

Anti-PAL signals.
Non-alternating R-Y signals and line-alternating B-Y signals.
Amplitude:
75 % of white level.

Pattern Composition, FuBK Pattern, 14:9 Centre

The 14:9 FuBK pattern is a cropped 4:3 pattern:
A total of 504 lines is displayed. The remaining lines (top and bottom) in every field are blanked.

3.9.11 VITS Lines

3.9.11.1 Teletext Signal

Two lines of teletext for enabling the test of subtitling by teletext.

Position in vertical blanking interval:
Line 15+328
Two text lines displayed on screen:
TELETEXT subtitling test lines
from PM5644 PALplus Generator

3.9.11.2 Ghost Cancelling Reference Signal

According to Recommendation ITU-R BT.1124

Position:
Fixed on line 318

3.9.11.3 ITU-R Testlines

Based on Rec. ITU-R 473-5

Vertical position:
Fixed on lines 17, 18, 330, and 331

Digitized in Heiloo the Netherlands Not for sale!

www.freeservicemanuals.info

3.10 Sync Generator Specification

Following modes for external synchronization are available:
– locking to a composite video signal.
– locking to a sync signal
The locking only takes place on the black/white information

3.10.1 Internal Mode

3.10.1.1 Master oscillator

Frequency:
13.5 MHz ±0.25 ppm
Ageing:
less than 0.1 ppm per month.

3.10.2 External Mode

Requirements as described under "External Sync Input - 3.6.1".

3.10.2.1 Sync Lock

Horizontal frequency lock range:
±10 ppm.
Lock-in time (vertical):
less than 1 s.
Jitter with respect to input sync:
less than 1 ns for noise free signal of nominal amplitude and frequency.
Jitter for 100 % hum (max. 1 V_{PP}):
less than ±2 ns.
Jitter for 36 dB_{RMS} signal-to-noise:
less than 2 ns.
Line phase change for sync level nominal ±6 dB:
less than 2 ns.
Horizontal phase adjustment:
+2/-8 µs via front panel control.

3.11 Environmental Conditions

3.11.1 Climatic Conditions

Ambient temperature:
5 °C to 45 °C (41 °F to 113 °F).
Limit range for storage and transportation:
-30 °C to 70 °C (-22 °F to 158 °F).

3.11.2 Mechanical Requirements

VIBRATION
Limit range for storage and transport:
30min. in each of three directions, 10 to 150Hz; 0.7mm_{P-P} and 50m/s^2 max acceleration.
According to IEC-Publ. 68, test Fc.
NOTE: Unit mounted on vibration table without shock absorbing material.

BUMP
Limit range for storage and transport:
1000 bumps of 100m/s^2 sine, 6ms duration in each of 3 directions.
According to IEC-Publ. 68, test Eb.

PACKAGING
According to UN-D-1400
The test methods mentioned in the N.V. Philips Standard UN-D-1400 are in accordance with those of relevant ISO-Standards.

3.11.3 Safety & EMC

Safety:
According to IEC 348 class 1.
Electromagnetic compatability:
Complying with EN 55022/1987 class B (CISPR 22/1985) and EN 50082/1992.

Electromagnetic field strength:
≤10V/m.

Digitized in Heiloo the Netherlands Not for sale!

www.freeservicemanuals.info 1/19/2025

Digitized by www.freeservicemanuals.info 2025

3.12 Power Supply

Mains supply voltage:
100, 120, 220, or 240 VAC, +10 %/-15 %,
Max. 250 VAC.
Mains supply frequency:
48 - 65 Hz.
Power consumption:
50 W.

3.13 Mechanical Data

19" rack mount cabinet.

Height	:	44 mm	(1.73").
Width	:	483 mm	(19").
Depth	:	461 mm	(18.14").
Weight	:	6.5 kg	(14.32 lbs).

3.14 Options

3.14.1 PM 8551: Remote Interface, IEEE-488 /RS232

By means of the remote control options it is possible to control all the functions in the instrument, and furthermore status information is available.

RS232:
- 9 pole male sub-D connector.
- Baud rate, stop and parity bits programmable via dip switches.

IEEE-488:
- 24 pin female Amphenol in compliance with IEEE-488 standard.
- Address setting: software programmable via menu.

Miscellaneous:
Local Lock prevents access to the instrument via the front plate controls.

Digitized in Heiloo the Netherlands Not for sale!

www.freeservicemanuals.info 1/19/2025

4. Accesories and Options

4.1 Accessories

Item:	Quantity:	Ordering Number:
Mains cable	1	5322 321 10594
Mains cable, US		5322 321 10123
Instruction manual	1	9499 493 09711

4.2 Options

Description:	Ordering Number:
PM 8551/20: Remote Interface, RS232	9449 085 51201
PM 8551/30: Remote Interface, IEEE-488	9449 085 51301
PM 8552: Slide Rail, Rack Mounting Kit	9449 085 52001

Digitized in Heiloo the Netherlands Not for sale!

www.freeservicemanuals.info 1/19/2025

Digitized by www.freeservicemanuals.info 2025

INSTALLATION AND OPERATING INSTRUCTIONS

Digitized in Heiloo the Netherlands Not for sale!

www.freeservicemanuals.info

5. Installation

5.1 Initial Inspection

Check the contents of the shipment for completeness and possible transport damage. If the contents are incomplete or damaged, a claim should be filed with the carrier immediately, and the Philips Sales or Service organization should be notified in order to facilitate the repair or replacement of the instrument.

5.2 Safety Instruction

5.2.1 Earthing

Before any other connection is made, the instrument must be connected to a protective earth conductor via the three-core mains cable.

Before connecting the equipment to the mains of the building installation, the proper functioning of the protective earth lead of the building installation needs to be verified.

> ***WARNING***: Any interruption of the protective conductor inside or outside the instrument, or disconnection of the protective earth terminal, is likely to make the instrument dangerous. Intentional interruption is prohibited.

5.3 Mains Voltage Setting and Fuses

Before inserting the mains plug into the mains socket make sure that the instrument is set to the local mains voltage.

NOTE: If the mains plug has to be adapted to the local situation it should only be done by a qualified person.

The mains connector of this instrument is specially constructed for safety. It is impossible to change the mains fuse or alter the operating voltage without removing the mains cable first.
The instrument can be used with a mains voltage supply of 100V, 120V, 220V or 240V AC +10%-15% (max. 250V AC).

- Remove the mains cable.
- Slide the protective plastic cover to the left to expose the fuse and coded mains plug. *See fig. 5-1.*

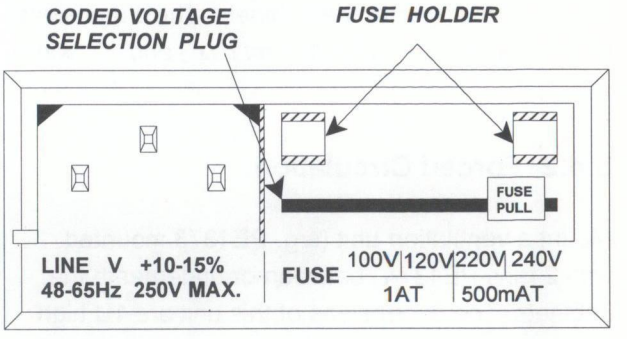

Fig. 5-1 Mains connector.

- Remove the fuse by pulling the black lever.
- The text printed on the coded mains plug is now visible.
- If the text does not agree with the local mains supply, insert a pointed instrument into the hole and remove the coded plug.
- Re-insert the plug so that the visible text agrees with the local mains voltage. (This is the number on the top-left portion of the card).
- Insert the mains fuse with one of the proper rating.
- Slide the protective cover to right.
- Re-insert the mains cable.

> ***WARNING***: If mains voltage has to be adapted to the local supply, it must only be done by a qualified person who is aware of the hazards involved. Make sure that only fuses of the required current rating and specified type are used for renewal. The use of repaired (jumpered) fuses and/or the short circuiting of the fuse holders is prohibited. Fuses must only be replaced by a qualified person who is aware of the hazards involved.

Digitized in Heiloo the Netherlands Not for sale!

www.freeservicemanuals.info 1/19/2025

Digitized by www.freeservicemanuals.info 2025

5.4 Rack Mounting

This PHILIPS PTV instrument is delivered (can be mounted) in a 19" cabinet. In systems where several cabinets are mounted in a 19" rack, special attention must be paid to the temperature. To avoid overheating, we recommend the following solutions:

5.4.1 Free Air Convection

Mount an air-flow unit (e.g. type PM 9799) between or underneath the cabinets. The dimensions of this unit is 1U high (=4.5cm/1^3/$_4$") and 19" wide.

5.4.2 Forced Circulation

Mount a ventilation unit (e.g. PE1373 mounted with 2 fans PE1374) between or underneath the cabinets. The dimensions of this unit are 1U high (=4.5cm/1^3/$_4$") and 19" wide.

5.4.3 Installation of Rack Mounting Kit PM 8552

The rack slides mount in any rack with a front-to-rear spacing between 18 and 27 inches. Reserve clearance between the rear panel of the instrument and the cabinet panel for connectors and to provide necessary air circulation.

Mounting of slide tracks.

1. Mount the chassis section of the rack slide kit to the instrument with the snap latch at the rear. Make sure that the screws are secured.
2. Mount the rails using the hardware shown in the figure. Align the stationary sections both horizontally and in level.

Installing of the instrument.

1. Pull the slide-out section to the fully extended position.
2. Insert the instrument chassis section into the slide-out sections.

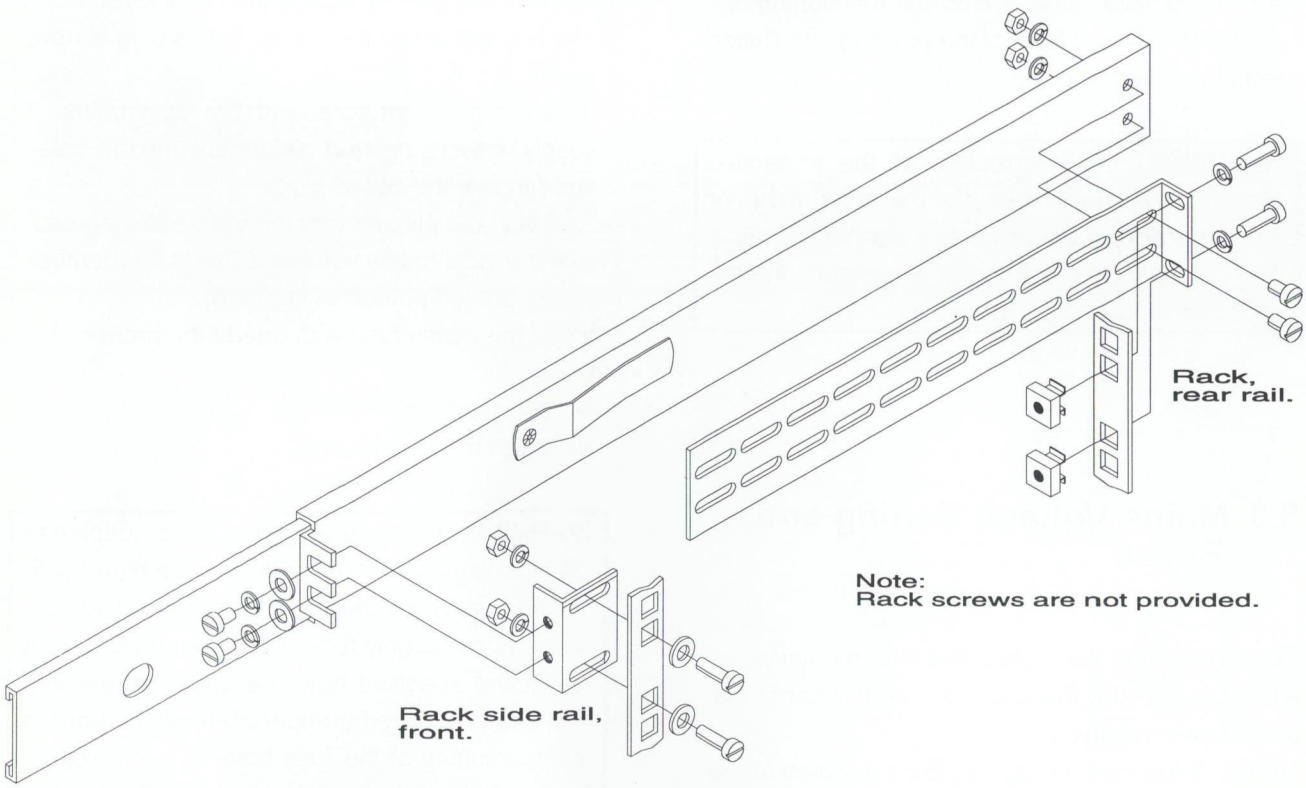

Fig. 5-2 Installation of Rack Mounting Kit

Digitized in Heiloo the Netherlands Not for sale!

www.freeservicemanuals.info

3. Press the snap latches and push the instrument towards the rack frame until the latches snap into their holes.
4. Press the stop latches again and push the instrument totally into the rack.
5. Fix the instrument by means of the front panel screws.

After installation, the slide tracks might need to be slightly adjusted to ensure smooth operation. To do so, pull the instrument halfway out, slightly loosen the screws holding the tracks to the front rail, and allow the tracks to settle to an unbound position. Tighten the screws and by pulling the instrument in and out several times ensure smooth operation.

Removal of instrument.

1. Loosen the screws in the rack frame and pull the instrument forward until the stop latches snap into their holes.
2. Press the stop latches and remove the instrument. Be sure that all cabling is disconnected before removing the instrument.

5.5 Access to and Replacement of Parts

5.5.1 Safety

The opening of covers or removal of parts, expect those to which access can be gained by hand, is liable to expose live parts. Accessible terminals may also be live.

The instrument must be disconnected from all voltage sources before performing any adjustment, replacement, maintenance, or repair which requires the instrument to be opened. If repair of the opened instrument is unavoidable, it must only be carried out by a skilled person who is aware of the hazards involved.

5.5.2 Access to Units

Remove all screws on the top plate. Lift up the top-plate. Units are now accessible.

Digitized in Heiloo the Netherlands Not for sale!

www.freeservicemanuals.info
1/19/2025

6. Configuration

6.1 General Information

The PM 5644 PALplus may be configured for a number of different applications. The information below contains instructions about which functions may be re-configured without the use of special parts and test equipment, but only by means of Programming Plugs (PP). For the location of the relevant plugs, *please refer to fig. 6-1*.

Factory preset values/functions are **highligted**.

6.2 Configuration of Pulse Outputs

6.2.1 Sync Level

The amplitude of the sync output may be set to either 2V or **4V** by means of PP3 on unit 1.

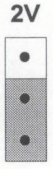

6.3 Trig Out

The Trig Out may be chosen as either **positive** or negative going by means of PP2 on unit 1.

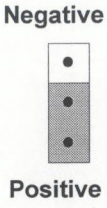

6.4 Synchronization

6.4.1 Subcarrier Notch

When the generator is required to genlock to a composite video signal containing colorburst, it is recommended to install a notchfilter for the color subcarrier. This may be done by setting PP21 on unit 1.

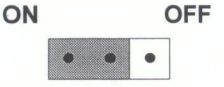

6.5 Other Controls

All other plugs are only for use during alignment of the generator and **MUST** be placed as shown below (PP must be placed for operation of the Oven Controlled Oscillator):

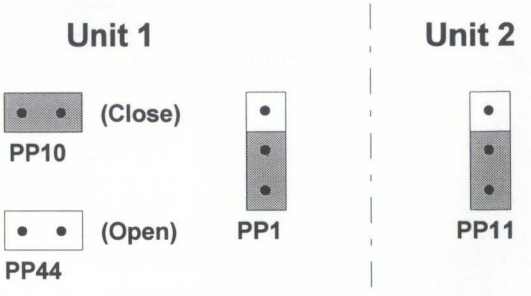

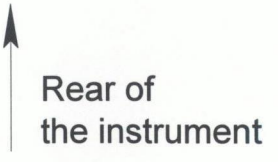

Digitized in Heiloo the Netherlands
Not for sale!

www.freeservicemanuals.info 1/19/2025

Digitized by www.freeservicemanuals.info 2025

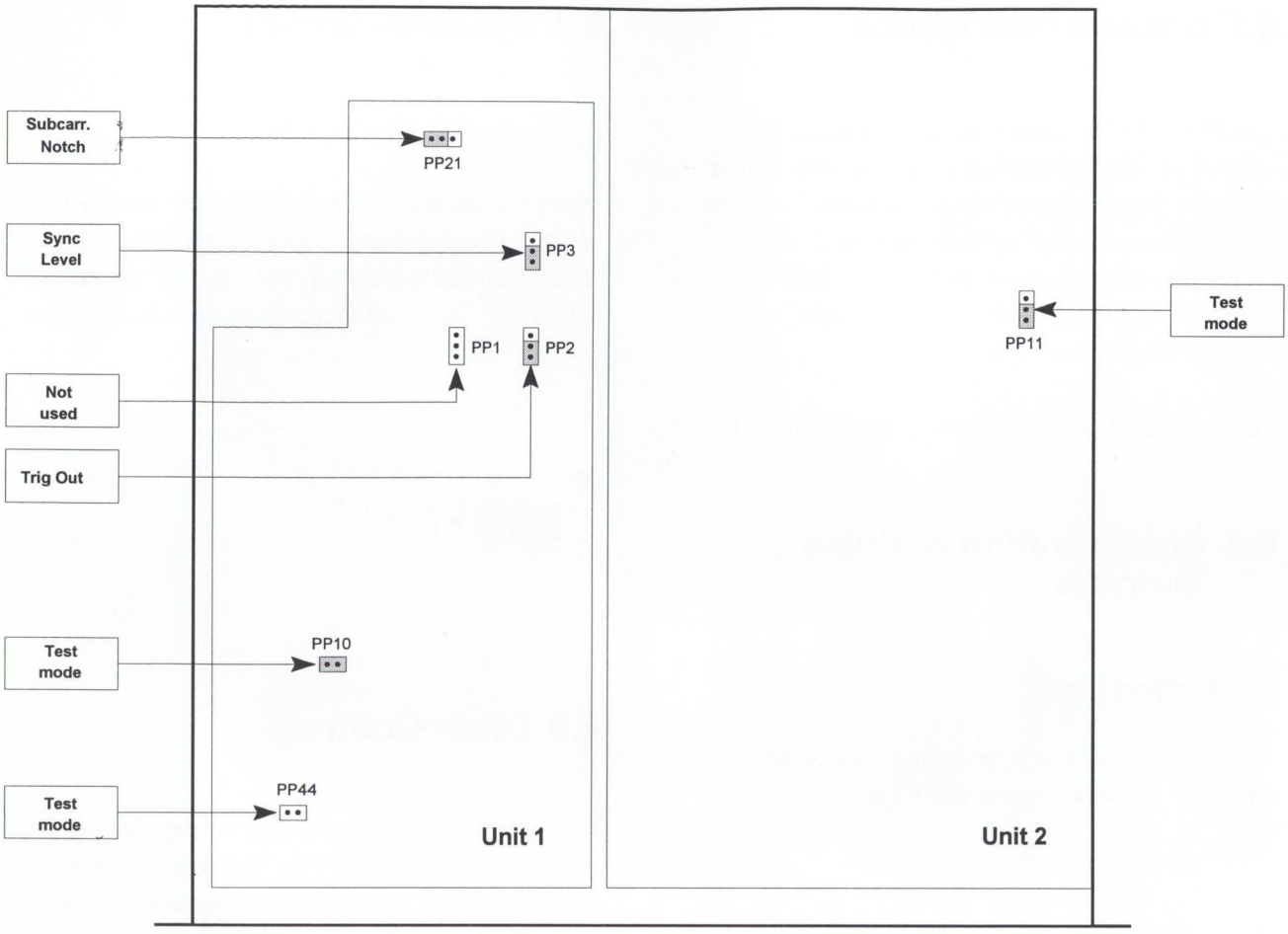

Fig. 6- 1 Location of Programming Plugs

Digitized in Heiloo the Netherlands Not for sale!

www.freeservicemanuals.info 1/19/2025

7. Operating Instructions

7.1 Front Panel Controls

All operational control and most of the configurations is conveniently carried out from the front panel. The two-lines-by-40-character LCD display, in conjunction with 4 cursor keys and an **EXECUTE** button allows easy configuration of the PM 5644 PALplus and selection of all patterns and signals.

Direct selection of signals for quick assessment is also possible as 3 stored signals can be recalled just by a push of button. To safeguard against un-intended or accidental operation, keylock functions may be activated in the menus.

With the cursor keys, relevant menus are called onto the display: the top line always shows the current status/selection or other current menu choices. The bottom line of the display is a menu line from which a new selection of signal or operating mode may be chosen.

The ▼ pushbutton allows for selection of new menus or sub-menus: the ▲ button brings about an exit from the current menu or sub-menu and a move to the next higher menu level. Pushing this button a sufficient number of times causes the display to show the status of the instrument, indicating signal output and operating mode. The status is also shown automatically after the power-on sequence and after the control panel has not been operated for more than approximately 60 seconds.

The ◄ and ► buttons are used to perform selections along the menu line in the display (bottom line).

Alternatively the generator may be configured so that the output instantaneously follows the menu selection (except for Panel-lock function).

Three presets, P1..P3, are provided for very fast access to often used signals/combinations. The presets are recalled directly, while a menu has to be entered for storing the selection.

7.1.1 Description of Controls

" ▲ ", " ▼ ", " ◄ ", " ► "

Pushbuttons controlling the selections in the menus. Icons in the upper right part of the display shown if they are operable.

"EXECUTE"

Confirms selection of menu parameter.

"P1", "P2", and "P3"

Pressing one of these buttons recalls the stored setting for the appropriate button, thus giving direct control for the users favorite signals.

Digitized in Heiloo the Netherlands Not for sale!

www.freeservicemanuals.info 1/19/2025

Digitized by www.freeservicemanuals.info 2025

7.2 Display Information

To guide the operator through operation, symbols of the push buttons which can be activated at that time will appear on the right side of the display.

▲ ▼ ◀ ▶	indicates which cursor key is active.
E	indicates that the EXECUTE button must be pressed to activate the required selection.
I	indicates that the panel is in the **Instant mode**, i.e. an **EXECUTE** is not required to select a signal.
< >	indicates the position of the cursor on the menu line.
. . .	indicates that more items are available on the menu line.
	indicates that the panel is locked.
. ! .	indicates that a fault has been found during start-up diagnosis and bypassed by instrument.
ESC	to abandon changes in the menus, place the cursor on <ESC> and press ▲ .
SAVE	to save a changed parameter, place the cursor on <SAVE> and press the **EXECUTE** button.

Digitized in Heiloo the Netherlands Not for sale!

www.freeservicemanuals.info

1/19/2025

7.3 Front Panel Indicators

"ON"

A green LED that indicates when DC power is available from the internal DC supply.

"REMOTE"

A yellow LED that switches on when the instrument receives a command via the interface.
The LED switches off again (instrument returns to local mode) when a button on the front panel is activated, except when Local lock-out has been set.

"UNLOCKED"

The red LED switches on if Genlock mode has been selected without a synchronizing signal being present on the EXT SYNCHR input (the generator switches automatically to internal sync mode until a valid external signal becomes available).

7.4 Front Panel Connections

"VIDEO OUT"

Video output from the generator, outputs a test signal or pattern selected by the user.

7.5 Rear Panel Connections

"VIDEO OUT" (2 BNC)

Two video output from the generator, outputs a test signal or pattern selected by the user.

"SYNC OUT"

This composite sync output locks another device onto the PM 5644 PALplus, such as locking a waveform monitor or a TV-monitor. This output is coincident with the "VIDEO OUT" output.

"TRIG OUT"

This trigger output can help in triggering on specific parts of the PALplus signal, making separation of helper and letterbox areas easy. The output can be configured for either positive or negative polarity.

"EXT SYNCHR"

Two BNC sockets providing a looped-through input facility for an external synchronization signal.

REMOTE

Connector for remote control of the generator (optional). The remote control facility can be supplied for the IEEE-488 and the RS232 standards. *Please see Chapter 8 for information on syntax and programming of these two interfaces.*

MAINS

The mains power connector with integrated fuse holder and voltage selector (*for selection of voltage and change of fuse, see Paragraph 5.3*).

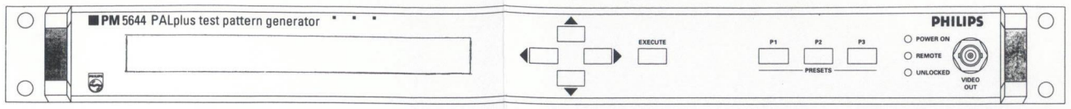

Fig. 7-1 Front of the Instrument

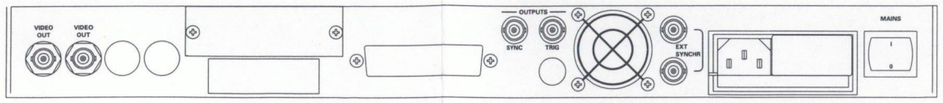

Fig. 7-2 Rear of the Instrument

Digitized in Heiloo the Netherlands
Not for sale!

www.freeservicemanuals.info 1/19/2025

7.6 Panel Operation

7.6.1 Power Up

A diagnostic routine is performed at power on and if there is a failure a message is displayed, e.g.:

```
PM5644 PALplus  Power-up diagnose . . .
Internal Test passed
```

The instrument stops if errors are detected, but may be escaped by pressing one of the buttons ▲, ▼, ◄ or ► .
Please see Table A.2 for the list of errors detected during power-up.

If **EXECUTE** is pressed, then all test routines are called up sequentially.

After a diagnostic routine is successfully completed, the following welcome message is displayed for approximately 30 seconds:

```
PM5644 PALplus TEST PATTERN GENERATOR
SYSTEM: 625/50 VERSION: XXX.X
```

The version number indicates the particular hardware and software version. This number labels the software version and together with the serial no. completely identifies the instrument. Both the s/w revision number and the serial no. must be stated for efficient field service and when upgrading is necessary.

7.6.2 Status

The generator will start up in the same operating mode and with the same output signal as were present at power-down.

This menu shows the main parameters for the instrument: first line with the output signal and the second line with additional status information, e.g. genlock, signal modifications.
The symbols ▼, ◄ , and ► are shown in the status display: pressing ▼ opens the top level of the menu structure and ◄ or ► scrolls the information in the second status line.

Examples of status display:

```
PALplus, PHILIPS Camera, Text
GENLOCK: Unlocked,  WSS: Std
```

The **status** is also shown after:
- Pressing the ▲ button a sufficient number of times to exit current menu levels.
- Escaping a selections menu (select ESC) and then pressing the ▲ button a number of times.
- Approximately 60 seconds after the last pushbutton was activated (except when AUTOESC, automatic return to top level, has been deactivated).

Digitized in Heiloo the Netherlands Not for sale!

www.freeservicemanuals.info 1/19/2025

In order to prevent accidental operation of the generator, a "Panel Lock" feature may be activated (*see PANEL LOCK below*). If this feature has been activated the display will show the same status, but a padlock icon will appear in the upper right-hand corner.

7.6.3 Menu Operation

Pressing the ▼ button in the status menu will cause the main menu to appear. This is the main entrance to all functions. If the control panel is locked, the padlock symbol will be flashing, indicating that the lock must be removed before any other operation is performed.

To exit the STATUS menu, press the ▼ button and move to the top-line menu:
(Top line from current status)

MENU: <SIGNALS> VITS PRESET GENLOCK WSS CONFIG

Select one of the menus to go onto the next menu, e.g.:

MENU: SIGNALS, select submenu SUBMENU: <PALplus> PAL ALTERNATE

The menus have basically the same structure and are operated in using the same procedure.

Select one of the items in the actual menu to:

- Make a selection in the next menu below.
- Use the arrow keys as indicated in the icon field. Also, selecting <EDIT> brings forth the next menu, where detailed programming is done.
- Select <SAVE> and press **EXECUTE** to store setting. Select <ESC> by means of the ▲ button to escape the menu.

or

- Select next the menu level, i.e. 2NDMNU.

or

- Confirm the selection by pressing **EXECUTE** (E is shown in the icon area).

Note. <SAVE> does not appear until a parameter is changed. Unintended changes are canceled by selecting <ESC> and returning to the level above.

Digitized in Heiloo the Netherlands Not for sale!

www.freeservicemanuals.info 1/19/2025

Digitized by www.freeservicemanuals.info 2025

7.7 Detailed Description of Menus

7.7.1 Menu: SIGNALS

This is the menu in which the selection of the basic test signals/patterns is made. The signals are divided into three groups, each group with a shared set of attributes. The assigned attributes are stored for each group (the alternating signal group has two sets of attributes, one for each of the alternating signals). Attributes are modifications to the standard signals which normally make the signal a non-standard one.

Note: Modification of attributes is **not** automatically changing the WSS code.

```
<SIGNALS>
  | _<PALplus >
  |     | __select: <PHILIPS  Camera, Text>     <EDIT>                          ESC
  |                                                | ___ Helper        On   (SAVE)   ESC
  |                                                      Letterbox       On   (SAVE)   ESC
  |                                                      Ref. line 23b   On   (SAVE)   ESC
  |                                                      Ref. line 623a  On   (SAVE)   ESC
  |
  | _<PAL >
  |     | __select: <PHILIPS 4:3>               <EDIT>                          ESC
  |                                                | ___ Line 23b      On   (SAVE)   ESC
  |                                                      Line 623a       On   (SAVE)   ESC
  |
  | _<ALTERNATE>
        | __modify: <A> <PALPLUS> <DUR. 11s>    <EDIT>                          ESC
                                                   | ___select: <PHILIPS Film> <EDIT>   ESC
                                                   |_____________________________↓
                                                  ↓
                                                   | ____ Helper       On   (SAVE)   ESC
                                                        Letterbox       On   (SAVE)   ESC
                                                        Ref. line 23b   On   (SAVE)   ESC
                                                        Ref. line 623a  On   (SAVE)   ESC
```

Operation in the PALplus and PAL submenus

1. From the STATUS menu press ▼ (and ◄ or ►) to go to the SIGNALS menu.
2. In the SIGNALS menu select, the PALplus submenu by using the ◄ or ► button and descend to the next level by pressing the ▼ button. In this next level, the following options exist:
   - selection of signal
   - editing of attributes
   - saving a new selection
   - escaping the menu
   - moving to the next level.

   The top line indicates whether the selected signal group has "Non-Std" or "Std" attributes.

Digitized in Heiloo the Netherlands Not for sale!

www.freeservicemanuals.info 1/19/2025

3. Selection of signals in the PALplus and PAL menus:
   - Use the ◄ or ► buttons to move the cursor to the SIGNALS field and then press ▼ or ▲ to select among the available signals. Attribute status is indicated in the top line: "Std" (Standard) or "Non-Std" (Non-Standard) signal. When a new signal is selected, the SAVE message pops up, replacing the EDIT command.
   - To activate the signal, move the cursor to SAVE and press the **EXECUTE** button. After the signal is saved, the menu level is maintained and the EDIT command returns. To modify or simply view the attributes, select the EDIT function to enter the next level below.

4. Selection of attributes editing:
   - Use ◄ or ► to move the cursor to EDIT and press the ▼ button to decend to the editing menu.
   - In the attributes submenu, press the ▼ or ▲ button to select among the parameters to be changed. Move the cursor the control field and use ▼ or ▲ to select On or Off.
   - Finally, if a parameter is changed, move the cursor to SAVE and press **EXECUTE** to store the selection. The SAVE command maintains the current menu level so that additional parameters can be set.
   - To discontinue the programming or leave the current level, move the cursor to ESC and press the ▲ button.

Command line for signal selection:

<signal name> *<control>* ESC

The *signal name* field for PALplus	: PHILIPS Camera PHILIPS Camera, Text PHILIPS Film PHILIPS Film, Text Helper Timing Test Helper Ampl. Test Motion Detect. Test Zoneplate, Circ.
The *signal name* field for PAL	: PHILIPS 4:3 PHILIPS 4:3, Text Linesweep 5MHz (test of PALplus compliance of transmitters) Modulated Staircases (test of PALplus compliance of transmitters) PLUGE, 2%, 4 levels PHILIPS 14:9 (cropped 4:3 pattern)
control	: EDIT as long as no changes are made to the signal selection. SAVE until the signal selected has been stored.

Digitized in Heiloo the Netherlands Not for sale!

www.freeservicemanuals.info 1/19/2025

Digitized by www.freeservicemanuals.info 2025

Command line for editing signal attributes:

<attribute> *<status>* <SAVE> ESC

The *attribute* field	: Helper signal	(only for PALplus signals)
	Letterbox signal	(only for PALplus signals)
	Ref. line 23b	(only for PALplus signals)
	Ref. line 623a	(only for PALplus signals)
	Line 23b	(only in PAL)
	Line 623a	(only in PAL)
The *status* field	: On or Off	

Operation in the ALTERNATE submenu

1. From the STATUS menu press ▼ (and ◄ or ►) to go to the SIGNALS menu.
2. In the SIGNALS menu, select the ALTERNATE submenu by using the ◄ or ► button and descend to the next level by pressing the ▼ button. In this next level, the following options exist:
   - selection A or B period,
   - signal group,
   - duration of each signal period,
   - moving to next level.
3. In the ALTERNATE menu the assignment of 2 different signals (including time period for each signal and attributes) is programmed. Each assignment has to be stored independantly.
   - To change or view the setting for period A or B, move the cursor to this item and press ▼ or ▲ to shift.
   - Select between PALplus and PAL signal groups, move the cursor to <signal type> and then press the ▼ or ▲ button. When a new group is selected, the EDIT command is replaced by SAVE. Attribute status is indicated in the top line: "Std" (Standard) or "Non-Std" (Non-Standard) signal.
   - Change the duration using the ◄ or ► button to move the cursor and then use the ▼ or ▲ button to decrement or increment the display time. Any change will make the SAVE message appear instead of EDIT.
   - To make the selection active, move the cursor to SAVE and press **EXECUTE** (only the displayed setting is stored). The EDIT command with then reappear.
   - The EDIT function provides access to a menu structure similar of the structure to the PALplus and PAL submenus. Please see the above description.

     Note: Selecting another signal will always assign the appropriate attributes to that signal, i.e. according to the last setting of the signal type.

Command line for ALTERNATE:

<Period A or B> *<Signal type>* *<Duration>* *<Control>* ESC

Values for the different elements:

Period A/B	: A or B.
Signal type	: PALplus or PAL, this selection is the entry to selection among the signals in the similar main groups.
Duration	: From 0.1 to 9.9 sec. in 0.1 sec. steps, and from 10 to 99 sec. in steps of 1 sec.
Control	: EDIT as long as there are no changes to the signal selection. SAVE until the signal selected has been stored.

Digitized in Heiloo the Netherlands Not for sale!

www.freeservicemanuals.info 1/19/2025

7.7.2 Menu: VITS

In this menu, the various functions related to the vertical blanking interval are programmed. The available Vertical Interval signals are inserted into fixed line positions.

```
<VITS>
  I_<Ghost ref. L. 318>                    <On>  (SAVE)   ESC
```

Operation

1. From the STATUS menu press ▼ (and ◄ or ►) to go to the VITS menu.
2. Move the cursor to the required item using the ◄ and ► buttons and change accordingly using the ▼ or ▲ buttons.
3. Store the setting by moving the cursor to the SAVE and press **EXECUTE** . The menu level is maintained to allow further selections.
4. To leave the menu, move the cursor to ESC and press the ▲ button.

Command line for VITS selection:

<VITS signal type> *<Status>* SAVE ESC

The *VITS signals types* and positions are:

Ghost Ref. L.318	: The GCR signal for the 625-line TV - system as specified in Recommendation ITU-R BT.1124 is selectable as an integral part of all the signals and allocated to TV - line 318.
CCIR 17, 18, 330, 331	: CCIR 473-5 recommended signals are placed on TV - lines 17, 18, 330, and 331. The position is fixed, and all the lines are inserted as one block and not individually.
Teletext subtitles	: This test line 15 contains information for subtitling of two lines in the active picture. The standard text included is: "TELETEXT subtitling test lines from PM5644 PALplus Generator.
The *status* field	: On or Off Note: Default is ON for all three types of VITS signals.

Digitized in Heiloo the Netherlands Not for sale!

www.freeservicemanuals.info 1/19/2025

Digitized by www.freeservicemanuals.info 2025

7.7.3 Menu: WSS

In this menu, the Wide Screen Signalling (WSS) code for control of the aspect ratio of the TV-display is controlled. This code is located in first half of line 23 and normally follows the display format of the video signal. For test purposes, it is possible to select non-standard codes. Unintended setting of the WSS codes can be avoided by locking this menu.

Note: A limited number of combinations of WSS codes are available (see Appendix A.3).
The setting of the WSS code is **not** automatically changing other elements of the video signal.

```
<WSS>
  |_WSS-Code <On>          <EDIT>                                    ESC
                               |__WSS-Bitdata <00010000000000>  (SAVE)  ESC
```

Operation

1. From the STATUS menu press ▼ (and ◄ or ►) to go to the WSS menu.
2. Move the cursor to the required item using the ◄ and ► buttons and either open the EDIT submenu by pressing ▼ or move the cursor to set the WSS code to On/Off. When a new status is selected, the EDIT command is replaced by SAVE.

3a. To store the On/Off setting: move the cursor to the SAVE position and press **EXECUTE** . The EDIT command will then reappear.

3b. To EDIT the WSS code, descend into the WSS menu and operate as follows:
- In this submenu, the top line shows the current Aspect Ratio label and the bottom line displays the same WSS code in a binary representation.
- To change the aspect ratio or other parts of the WSS code, press the **EXECUTE** button. Now the cursor is placed inside the brackets with the binary WSS code. The aspect ratio bits (b0..b3) are replaced with a ↕ symbol, which indicates that the format can be changed by pressing the ▼ or ▲ buttons. This "rolling" will simultaneously change the readable aspect ratio label in the top line.
- Change as required the programmable bits by moving the cursor to the relevant bit and pressing ▼ or ▲ to change the WSS code.
- Exit the WSS editing mode by pressing the **EXECUTE** button, and store the setting by moving the cursor to SAVE and pressing **EXECUTE** .

  Note: Bits programmable for a certain aspect ratio are clearly indicated with normal sized "0" and "1", and only valid codes can be selected.
  The "ALTERNATE" signal group is always with correct WSS codes.

Command line for WSS status:

WSS-CODE<*status*> <*EDIT*>

First item *status* : On or Off; control of insertion of WSS code.

Second item *EDIT* : Entry for the next menu down.

Digitized in Heiloo the Netherlands Not for sale!

www.freeservicemanuals.info

Command line for WSS programming:

WSS-Bit<*number*> <*binary data*> SAVE

The WSS-Bit<*number*> field : Displays the bit number (4-13) corresponding to the cursor position. Displays the text "A.R." (Aspect Ratio) when the aspect ratio bits are being set.

The *binary data* field : Displays during programming a symbol instead of the first 4 bits. The remaining 10 bits are shown in a binary format. After programming, this field shows the current WSS code.

The aspect ratio bits can be set to following combinations:

Description:	b_0 b_1 b_2 b_3	**Comments:**
Full format 4:3	0 0 0 1	576 lines
Box 14:9, center	1 0 0 0	504 lines
Box 14:9, top	0 1 0 0	504 lines
Box 16:9, center	1 1 0 1	430 lines
Box 16:9, top	0 0 1 0	430 lines
Box >16:9, center	1 0 1 1	< 430 lines
Full 4:3, sh/pr 14:9	0 1 1 1	576 lines
Full format 16:9	1 1 1 0	Anamorphic PAL 4:3, 576 lines
Code violation, B3=0	0 0 0 0	Code violation of full format 4:3
Code violation, B3=1	0 1 0 1	Code violation of box 14:9 top

Digitized in Heiloo the Netherlands Not for sale!

www.freeservicemanuals.info 1/19/2025

Digitized by www.freeservicemanuals.info 2025

7.7.4 Menu: GENLOCK

This menu is used to select of genlock status and is also used for adjusting the relative phase of the output signal compared to the genlocking input signal.

The genlock phase is conveniently adjusted in two steps: **Coarse** and **Fine**. Coarse adjustment operates in steps of 148s and fine adjustment divides a coarse step into approximately 160 steps: the resultant resolution is approximately 0.9ns.

```
<GENLOCK>
  | _EXT.SYNCHR<On>          <PHASE >                                  ESC
                                | __select:<COARSE>
                                |          | ___ | .......## | ..... |     (SAVE)   ESC
                                | __select:<FINE>
                                           | ___ | ########..... |      (SAVE)   ESC
```

Operation

1. From the STATUS menu, press ▼ (and ◄ or ►) to go to the GENLOCK menu.
2. Use the ◄ or ► buttons to select either the On/Off field or the phase selection field.

3a. Genlock status:

- Select the status of external synchronization , On or Off, using the ▼ or ▲ buttons. When a new status is selected, the PHASE menu item disappears and the SAVE message pops up instead.
- Move the cursor to SAVE and press **EXECUTE** to store the status. The PHASE menu item will reappear.

3b. Phase adjustment:

- Move the cursor to PHASE and press the ▼ button to open the next level down.
- Move the cursor to FINE or COARSE as appropriate, and press the ▼ button to go to the adjustment menu.
- Adjust the genlock phase using the ▼ or ▲ button. Holding one of the keys down will cause the phase to increment or decrement automatically. A bargraph illustrates the adjustment range available. The SAVE message pops up as a response to the change of the phase.
- Move the cursor to SAVE and press **EXECUTE** to store the phase setting.

4. To leave the genlock menu, move the cursor to ESC and press ▲.

Digitized in Heiloo the Netherlands Not for sale!

www.freeservicemanuals.info 1/19/2025

7.7.5 Menu: PRESET

In this menu, non-standard WSS codes and attributes can be reset to standard assignments. Also in this menu, the three preset buttons can be programmed with the current front plate setting.

```
<PRESET>
  I _SELECT: <Reset WSS & attrib.>                    (OK)    ESC
```

Operation

1. From the STATUS menu press the ▼ (and ◄ or ►) buttons to go to the PRESET menu.
2. Press ▼ or ▲ to select the reset function and preset programming. The complete front plate setting can be stored on presets P1 to P3 following the instructions.
3. To activate a reset function: move the cursor to OK and press **EXECUTE** . The menu level is maintained to allow further selection.
4. To leave the menu, move the cursor to ESC and press the ▲ button.

Selection of P1, P2, P3 can be done at any time; pressing one of the buttons brings up one of the stored settings.

Command line for PRESET functions:

<Command string> OK ESC

Available *command strings*:

Reset WSS & Attrib.	: Restores both standard WSS code and active video part.
Reset WSS Code	: Restores the current output with standard WSS code.
Reset Attributes	: Restores the active video part to standard.
Store Settings	: Move the cursor to OK and subsequently pressing one of the preset buttons (P1, P2, or P3) will store the current setting of the front plate. The following parameters are **not** stored for each preset button:

- Genlock condition and phase adjustment
- LCD contrast, AUTO-ESC, and SIGNAL-SEL
- IEEE-488 address
- Locks

Digitized in Heiloo the Netherlands Not for sale!

www.freeservicemanuals.info 1/19/2025

Digitized by www.freeservicemanuals.info 2025

7.7.6 Submenu: LOCK

This menu serves to safeguar the instrument against unintended operation. Non-standard signals can also be prevented, as well as abnormal WSS-codes and modifications to the basic video signal.

```
<CONFIG>
  |_ <LOCK>
        |__Select<Panel lock>                    (On)   (SAVE)   ESC
```

Operation

1. Move the cursor down the menu tree to go to the LOCK menu.
2. Select the function to be locked or unlocked using the ▼ or ▲ key.
3. Next move the cursor to the status field On/Off and press ▼ or ▲ to change. The SAVE message is then added to the display.
4. Place the cursor on SAVE and press **EXECUTE** to store and activate the function.

Cancel selection by placing the cursor on ESC and pressing ▲.

Command line for LOCK:

SELECT *<command>* *<status>* SAVE ESC

Available *commands*:

Panel-lock	: Prevents accidental operation of the generator, the lock must be unlocked before any other operation can take place.
WSS-lock	: This lock prevents programming of WSS codes: only codes complying with the format of the video signal can be inserted.
Attribute-lock	: This lock prevents programming of non-standard active video, which especially safeguards the PALplus helper signal and the PALplus references.

The *status* field : On or Off

Digitized in Heiloo the Netherlands Not for sale!

www.freeservicemanuals.info 1/19/2025

7.7.7 Submenu: LCD-CONTRAST

The contrast is adjustable to provide optimum readability for the viewing angle. Only one setting is available; no user-defined levels can be stored on presets.

```
<CONFIG>
  I_LCD-CONTRAST
      I__ADJUST: I#####################          I
```

Operation

1. Move the cursor down the menu tree to go to the LCD-CONTRAST menu.
2. The contrast is adjusted by means of the ◄ and ► buttons; a bar graph indicates the range and settings available.
3. Press ▲ to leave this menu.

7.7.8 Submenu: DIAGNOSE

Contains test options for communications within the instrument (**Comm**), a test of the memory (**Memory**), and a test of the display (**Display**).

```
<CONFIG>
  I_DIAGNOSE
      I__select: <Comm>  <Memory>  <Display>  <Interface>
```

Operation

1. Move the cursor down the menu tree to go to the DIAGNOSE menu.
2. Use the ◄ or ► buttons to move the cursor.
3. Start the test by pressing the **EXECUTE** button.

The test will now run continuously until it is interrupted by pressing ▲.

Error codes will indicate the nature of any failures (see Appendix, Table A.2).

Digitized in Heiloo the Netherlands Not for sale!

www.freeservicemanuals.info 1/19/2025

Digitized by www.freeservicemanuals.info 2025

7.7.9 Submenus: AUTO-ESC & SIGNAL-SEL

The automatic return (AUTO-ESC) to the top STATUS menu after 60 seconds can be disabled in this menu.

Two operation modes of the front plate can be selected: direct selection or via SAVE and **EXECUTE**.
The selection of the mode is set in the SIGNAL-SEL. menu.

```
<CONFIG>
  I _ AUTO-ESC
  I      I __AUTO RETURN TO STATUS <On>                    (SAVE)    ESC
  I _SIGNAL-SELECT
         I __select: <Instant>                              (SAVE)    ESC
```

Operation

To set the automatic return to the top-level (AUTO-ESC):

1. Move the cursor down the menu tree to go to the AUTO-ESC menu.
2. Press ▼ or ▲ to select On or Off. When a selection is changed the message SAVE pops up.
3. Move the cursor to SAVE and press **EXECUTE** .
4. To discontinue programming, move the cursor to ESC and press the ▲ button.

To set the mode of signal selection:

1. Move the cursor down the menu tree to the SIGNAL-SEL. menu.
2. Press ▼ or ▶ to select between the commands INSTANT or via EXECUTE. When a selection is changed, the message SAVE will pop up.
3. Then move the cursor to SAVE and press **EXECUTE** .
4. To discontinue programming, move the cursor to ESC and press ▲.

Command line for SIGNAL-SEL

SELECT<*command*> SAVE ESC

Available *commands*:

INSTANT	: Instantaneous display of selected signal.
via-EXECUTE	: The selection is first activated after the SAVE procedure. It facilitates leafing through all selections without affecting the current output.

In the INSTANT mode, the furthest character to the right in the line is permanently an "I" to indicate the mode.

Digitized in Heiloo the Netherlands Not for sale!

www.freeservicemanuals.info
1/19/2025

7.7.10 Submenu: IEEE-INTERF (Only with Option PM 8551/30)

The IEEE-488 address setting is selected in the menu below (addresses range between 0 and 30 are selected by means of software setting or via hardware controlled via internal switches).

```
<CONFIG>
 I _IEEE-INTERF
      I __ADDRESS< 6>                                    (SAVE)     ESC
```

Operation

1. Move the cursor down the menu tree to go to the IEEE-INTERF menu.
2. Press ▼ or ▲ to select among the assignable values for the address field.
3. To store the required assignment, move the cursor to SAVE and press **EXECUTE** .
4. To discontinue programming, move the cursor to ESC and press ▲.

Note: To activate the internal switches, the instrument must be switched off and then on again.

Command line for IEEE address:

ADDRESS<*string*> SAVE ESC

The address *string* values : Address range 0-30.
And "Int. Switches (--)", where (--) indicates that internal switches have been selected but not yet activated by the switch off/on sequence.
The internal setting also can set the additional parameters: LON and TON.

```
<SIGNALS>
 I_<PALplus>
 I      I__<PHILIPS Camera, text>                    <EDIT>
 I                                                     I___Helper
 I_ <PAL>
 I      I__<PHILIPS 4:3>                             <EDIT>
 I                                                     I___Line23b
 I_ <ALTERNATE>
        I__PERIOD<A>   <PALPLUS>   <DUR. 11s>   <EDIT>
                                                      I___<PHILIPS Film>  <EDIT>
                                                                           I____Helper
```

```
<VITS>
 I_<Ghost ref. L.318>     <On>
   <CCIR17,18,330,331>
   <Teletext subtitles>
```

```
<WSS>
 I_WSS-Code               <On>        <EDIT>
                                        I__WSS-bitdata <00010000000000>
```

```
<GENLOCK>
 I_EXT.SYNCHR             <On>        <PHASE >
                                        I__<COARSE>
                                        I      I___I.......##I.....I
                                        I__<FINE>
                                               I___I.......##I.....I
```

```
<PRESET>
 I_<STORE, press P1..P3>
   <Reset WSS & attrib.>
```

```
<CONFIG>
 I_<LOCK>
 I      I__<Panel lock>
 I          <WSS-lock>
 I          <Attribute-lock>
 I_LCD-CONTRAST
 I      I__ADJUST: I######## I
 I_ AUTO-ESC
 I      I__AUTO RETURN TO STATUS
 I_SIGNAL-SELECT
 I      I__<Instant>
 I          <via EXECUTE>
 I_DIAGNOSE
 I      I__<Comm>   <Memory>   <Display>   <Interface>
 I_IEEE-INTERF
        I__ADDRESS< 6>
```

Fig.7-3 Menu tree

Digitized in Heiloo the Netherlands
Not for sale!

www.freeservicemanuals.info

8. Remote Control

8.1 Programming Syntax

Commands for programming the instrument consist as a minimum of a "HEADER" and a "Message Terminator".

Most commands accept one or more data elements to form the complete command.

A Query form is allowed for most commands fro returning programmed and measured data.

The are 3 different types of programming data:
- Nummeric Data,
- Character Data, and
- String Data.

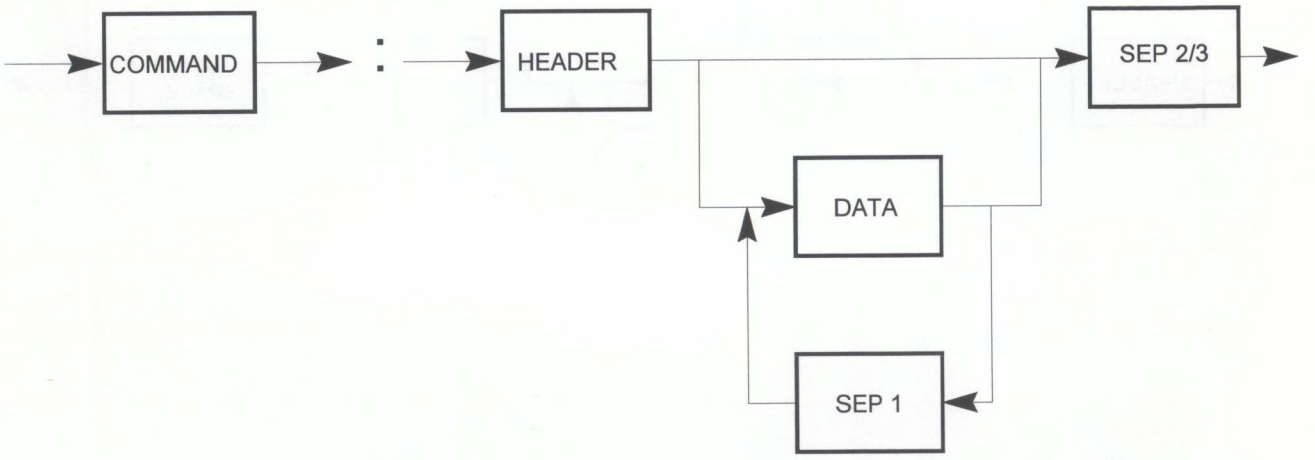

Digitized in Heiloo the Netherlands
Not for sale!

www.freeservicemanuals.info 1/19/2025

Digitized by www.freeservicemanuals.info 2025

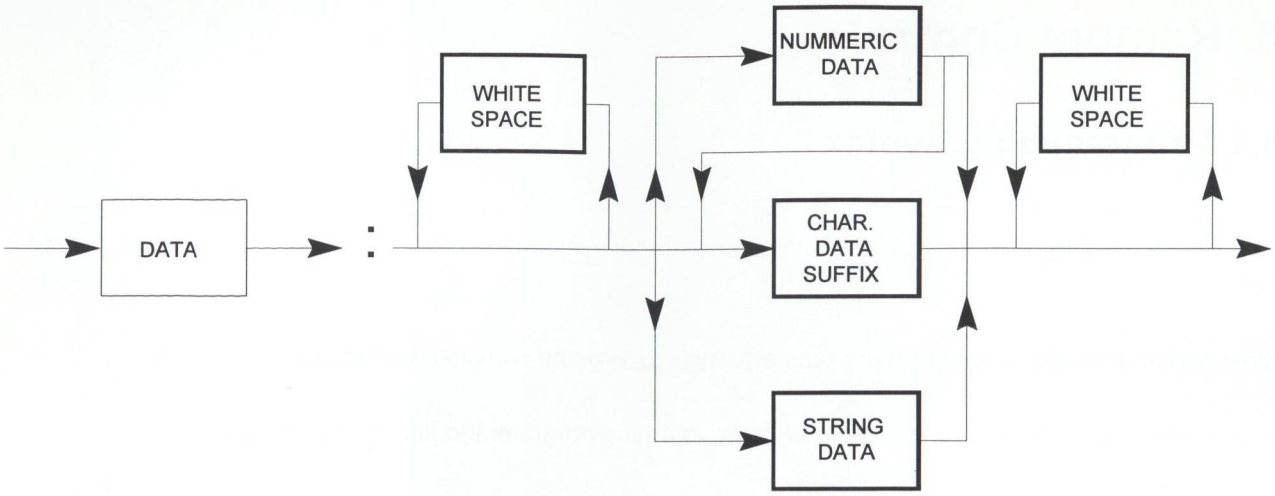

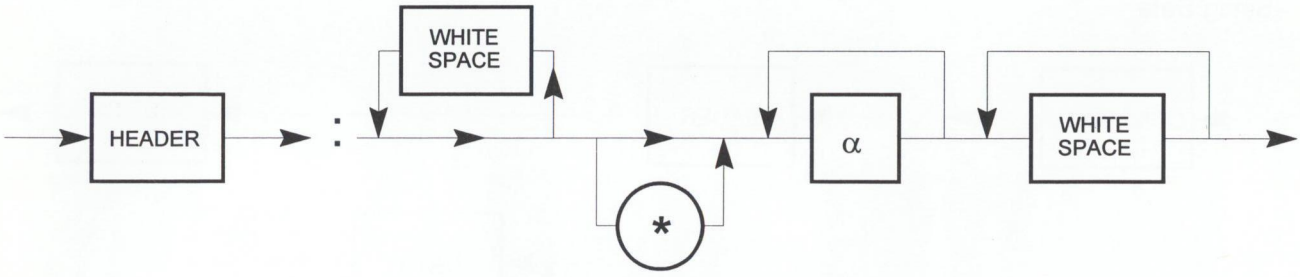

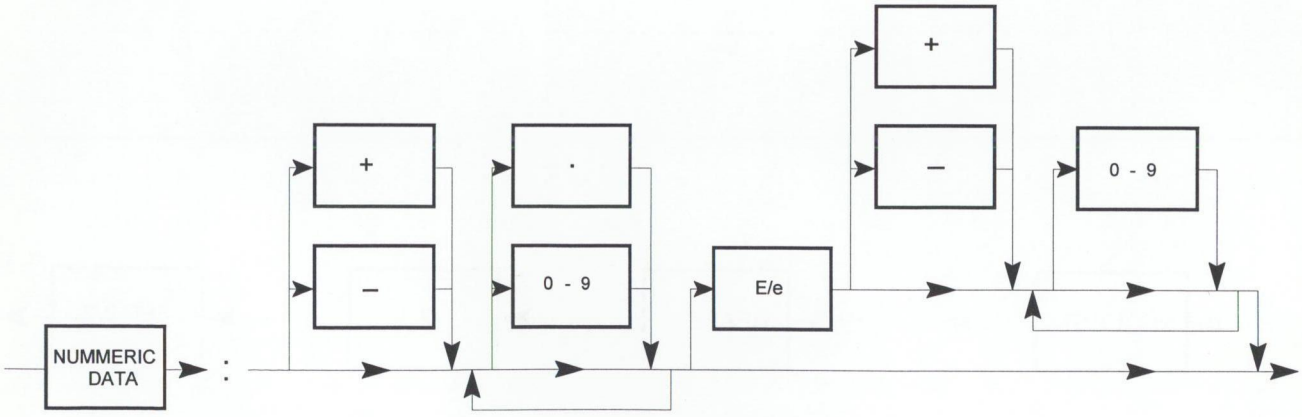

Digitized in Heiloo the Netherlands Not for sale!

www.freeservicemanuals.info

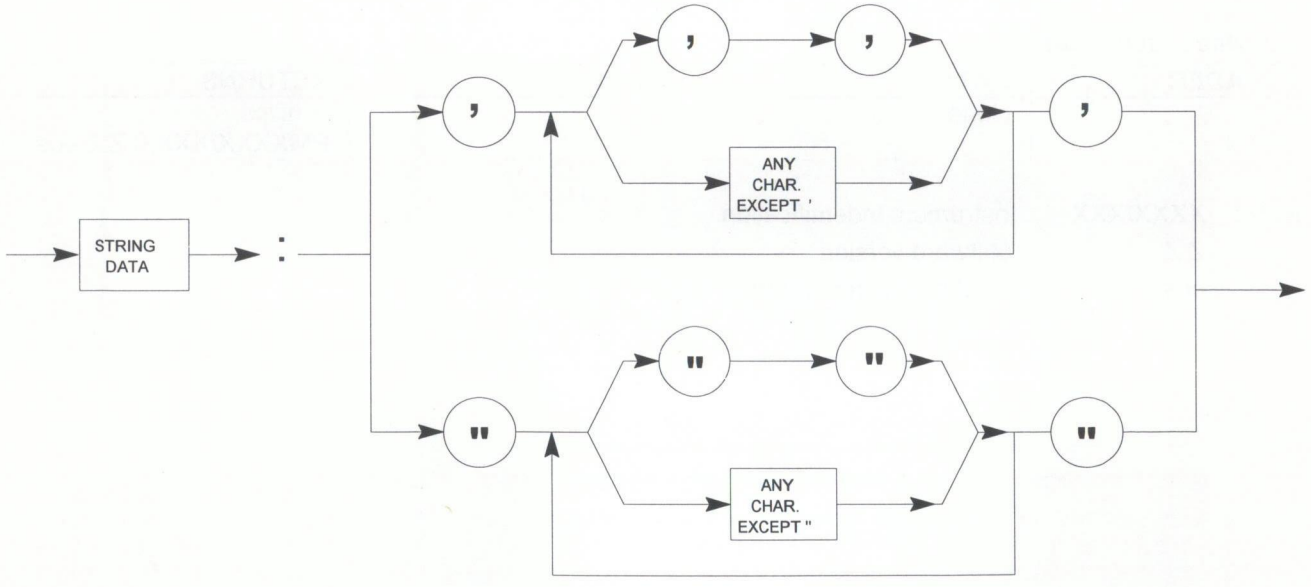

Digitized in Heiloo the Netherlands
Not for sale!

www.freeservicemanuals.info 1/19/2025

Digitized by www.freeservicemanuals.info 2025

(ASCII : 2C)

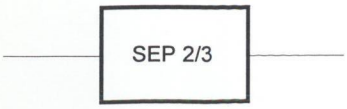

Message Terminator
In accordance with
the Interface Configuration + ; +LF

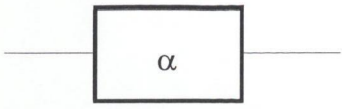

a-z, A-Z, - (ASCII : 97-122, 65-90, 95)

All instrument programming commands are listed in a table with the following information:

HEADER with alternative spellings, **DATA** with limits, resolution etc., for Nummeric Data the default **SUFFIX** in () and other suffixes. And the format of **RETURN**ed data is shown.

The interface can provide an idenfication of the device in which it is installed.

Device Indentification

HEADER	DATA	SUFFIX	RETURNS
ID *IDN	None		"Philips, PMXXXX/XXX,0,Z.Z,eos"

Note: XXXX/XXX : Instrument Indentification.
Z.Z : Software version.
eos : Valid output seperator(s).

Digitized in Heiloo the Netherlands Not for sale!

www.freeservicemanuals.info

8.2 IEEE Operation

8.2.1 Hardware Configuration

The interface comes with a 24-pin female AMPHENOL connector that complies with the IEEE-488 standard. If your controller cabling is of the IEC-625 type, connection can be made using the IEEE to IEC adapter PM 9483/50 (to be ordered separately, not included as accessory).

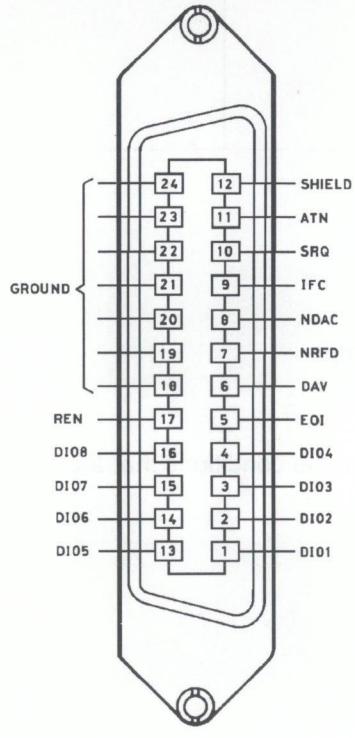

Fig. 8-1 Connector pin-out, IEEE

The hardware configurationals include:
- Device address
- Interface mode
- Shielding

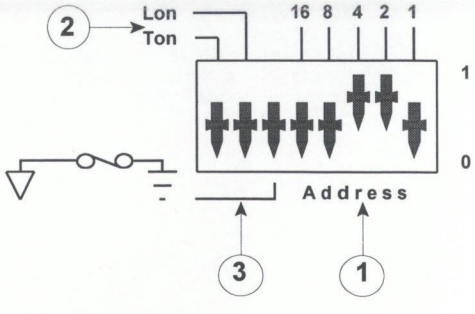

Fig. 8-2 Hardware programming, SW1

1:

The device address is set using the five decimal weighted switches. All address settings except "31" and the "[controllers address]" are acceptable (standard factory setting is "6").

Example:

	16	8	4	2	1
0	X	X			X
1			X	X	

Address = 4 + 2 = 6

2:

Mode Switches

Lon	Ton	Mode
0	0	Addressable mode (*standard factory setting*)
0	1	Talk only
1	0	Listen only

3:

Logic 0 may be disconnected from the shielding in order to eliminate unwanted currents.

Switch position	Shield condition
0	Logic "0" connected (*standard factory setting*)
1	Logic "0" disconnected

8.2.2 Interface programming

The IEEE remote interface can via the controller be configured with regard to:
- Record separator
- Service request mask

Furthermore, it can provide 'device indification'.
The programming of the interface must follow the syntax illustrated on page 8-1.

Note: When programming the interface, before every header/body combination, the listen address of the interface must be send (MLA).

Digitized in Heiloo the Netherlands Not for sale!

www.freeservicemanuals.info 1/19/2025

Digitized by www.freeservicemanuals.info 2025

1. Separator programming

The interface can be programmed to accept single and double separators. At power on the single separator "LF" is default setting (ISO code 10). When the interface sends data to the controller, the data stream is concluded with the programmed separator(s), and the EOI line is activated concurrent with the transmission of the (last) separator.

Definition of record separator(s).

HEADER	DATA	SUFFIX	RETURNS
SPR	n1 (,n2) Separator 1 : n1 Separator 2 : n2 n1 and n2 are the decimal quivalent (ISO code) of the desired separator(s). ESC (ISO 27) is not allowed as separator. Default separator at power on is "LF" (ISO 10).	none	

Table 8-1 Programming, separator(s)

Example:

a) "SPR 03" defines "ETX" as input/output separator.

b) "SPR 13, 10" defines the sequence "CR LF" as input/output separator.

2. Service request mask

The interface can be programmed to request service for one or more of the conditions that are reflected in the status byte.

Bit	Condition
7	EXT
6	RQS
5	AB
4	BSY
3	EF3
2	EF2
1	EF1
0	EF0

Table 8-2 Status byte

EXT:

not used

RQS:

service request

AB:

Abnormal condition

AB	
0	Normal (no error)
1	Abnormal (error condition as specified by EF0-EF3))

Digitized in Heiloo the Netherlands Not for sale!

www.freeservicemanuals.info

BSY:
Busy

EF0-EF3:
Message flags

AB	EF3-EF0	Dec.	Message
0	0001	1	Message string available
1	1100	12	Number error
1	1101	13	Execute error
1	1110	14	Head/suffix error
1	1111	15	Syntax error

Table 8-3 Message flags EF0-EF3

At power on all service requests are masked (disabled). Thus, if an error condition occurs, no service request will be generated. The instrument status can, however, always be checked by reading the status byte via a serial poll. The service request facility can be enabled for the following qualifying conditions:

Qualifying condition	Decimal equivalent
EF0 changed from 0 to 1 and AB=0 (DAV)	1
EF1 changed and AB=0 (not used)	2
EF2 changed and AB=0 (not used)	4
EF3 changed and AB=0 (not used)	8
EF0 changed from 0 to 1 and AB=1	16
EF1 changed from 0 to 1 and AB=1	32
EF2 changed from 0 to 1 and AB=1	64
EF3 changed from 0 to 1 and AB=1	128
BUSY changed from 1 to 0	256

Table 8-4 Qualifying conditions

At the generation of a service request the RQS bit will be set and the SRQ line activated. RQS and SRQ are reset again, when the controller polls the status byte. To specify one or more qualifying conditions, the decimal equivalent of the condition(s) must be send to the interface using the MSR command ("MSR 0" masks (disables) all interupts):

Definition of service request mask

HEADER	DATA	SUFFIX	RETURNS
MSR	n Mask : n = [0 - 511]	none	

Table 8-5 Programming, service request mask

Example 1:
The interface shall request service for 'data available' only. The mask bit for 'data available' has the decimal value "1". The resulting command is "MSR 1".

Digitized in Heiloo the Netherlands Not for sale!

www.freeservicemanuals.info 1/19/2025

Digitized by www.freeservicemanuals.info 2025

Example 2:

The interface shall request service for 'data available' and for all the possible error conditions reflected by the error flags EF3-EF0. The EF3 bit be active in all four possible error conditions. The decimal value for the desired qualifying conditions is 129 (128+1) as shown in table 6-6. The resulting command is "MSR 129".

Note: The status byte can not simultaneously indicate conditions related to AB=0 (normal) and AB=1 (abnormal). The various combinations available, result in four possible service request/serial poll sequences:

a) All service request qualifyers are masked (disabled):
The first serial poll will show the error flags EF3-EF0 for the abnormal condition (if one exists). At the following serial poll, the AB bit will be cleared and the 'normal' status is indicated by EF3-EF0.

b) One or more AB=1 conditions are enabled. All AB=0 conditions are masked (disabled): If the enabled Abnormal condition qualifyer occurs, a service request is generated and the abnormal condition is indicated in the status byte.

c) All AB=1 conditions are masked (disabled). One ore more AB=0 conditions are enabled: If the enabled 'normal' condition qualifyer occurs, a service request is generated. The first serial poll will show the error flags EF3-EF0 for the 'normal' condition that caused the service request. A following serial poll will set AB to 1 and indicate the 'abnormal' status.

d) Some or all 'normal' and 'abnormal' qualifying conditions are enabled: If the enabled 'abnormal' condition occurs, a service request is generated and the reason is indicated in the status byte. If the enabled 'normal' condition occurs a service request will be generated and the reason is indicated in the status byte. However, if an 'abnormal' condition occurs before the pending 'normal' request is polled, the 'abnormal' condition will be indicated in the status byte (the reason for the 'normal' condition is lost!!!).

Digitized in Heiloo the Netherlands Not for sale!

www.freeservicemanuals.info 1/19/2025

8.3 RS232/V24 Operation

8.3.1 Hardware Configuration

The interface comes with a 9-pin male D-connector, that via a DB-9 female to DB-25 male adapter, complies with the RS232(EIA)- and the V24 (CCITT) standard.

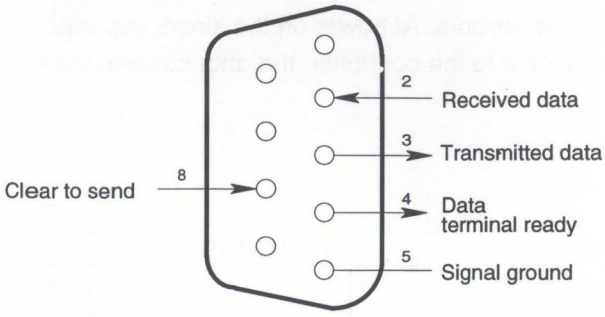

Fig. 8-3 Connector pin-out, RS232/V24

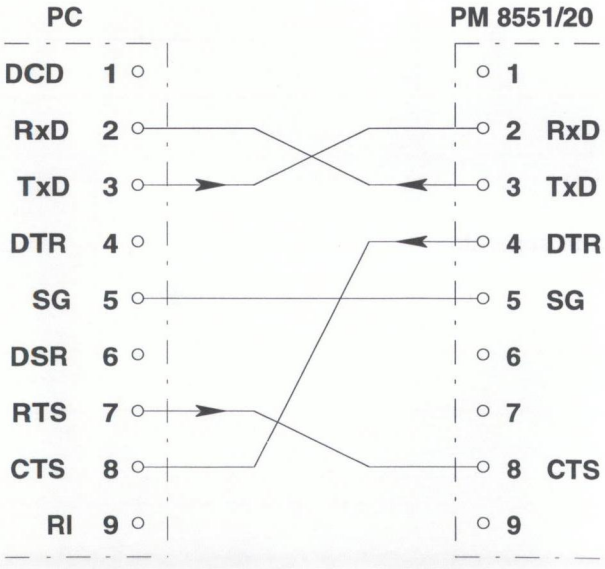

Fig. 8-4 Configuration of cable between PC and PM 8551/20.

The hardware configurationals include:
Communication settings:
- Baud rate
- Character length
- Parity selection
- Handshake

1. Communication settings:

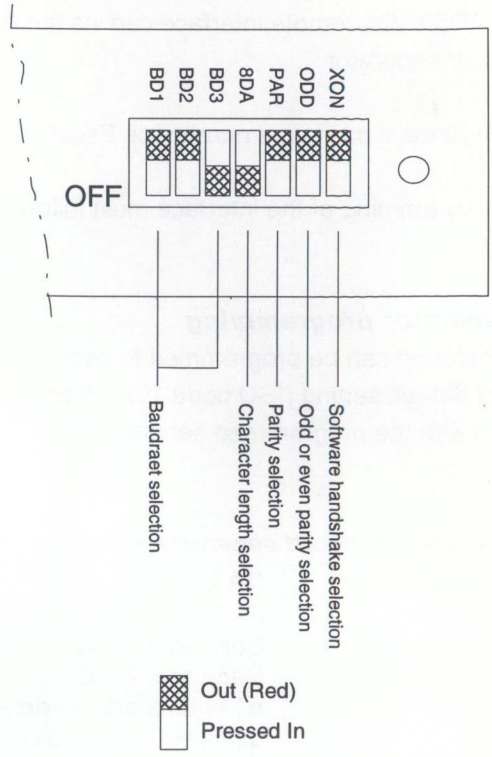

Fig. 8-5 Communication setting, SW1

BD1	BD2	BD3	Baudrate
off	off	off	110
on	off	off	150
off	on	offf	300
on	on	off	600
off	**off**	**on**	**1200**
on	off	on	2400
off	on	on	4800
on	on	on	9600

Table 8-6 Baudrate setting

SWITCH	FUNCTION
8DA	**on : 8 data bits character length** off : 7 data bits character length
PAR	on : Parity on **off : Parity off**
ODD	on : Odd parity **off : Even parity**
XON	on : Xon/Xoff handshake on **off : Xon/Xoff handshake off**

Table 8-7 Character length, Parity and Handshake setting.

Bold = Standard Factory Setting

Digitized in Heiloo the Netherlands Not for sale!

www.freeservicemanuals.info 1/19/2025

Digitized by www.freeservicemanuals.info 2025

8.3.2 Interface Programming

The RS232/V24 remote interface can via the controller be configured with regard to:
– Record separator

Furthermore, it can run a number of 'Escape functions'.

The programming of the interface must follow the syntax illustrated on page 8-1.

1. Separator programming

The interface can be programmed to accept single and double separators. At power on the singel separator "LF" is default setting (ISO code 10). When the interface sends data to the controller, the data stream is concluded with the programmed separator(s).

Definition of record separator(s).

HEADER	DATA	SUFFIX	RETURNS
SPR	n1 (,n2) Separator 1 : n1 Separator 2 : n2 n1 and n2 are the decimal quivalent (ISO code) of the desired separator(s). ESC (ISO 27), ETX (ISO 03) and EOT (ISO 04) are not allowed as separator. Default separator at power on is "LF" (ISO 10).	none	

Table 8-8 Programming, separator(s)

Example:
a) "SPR 13" defines "CR" as input/output separator.
b) "SPR 13, 10" defines the sequence "CR LF" as input/output separator.

2. Escape functions

ESCAPE (n)	Function
1	Goto local
2	Goto remote
3	Goto local and unlock
4	Device clear
5	Local lock out
7	Status request
8	Device trigger

Table 8-9 Escape functions

Digitized in Heiloo the Netherlands Not for sale!

www.freeservicemanuals.info

When using the "ESCAPE 7" function, a status byte will be send to the controller:

Bit	Condition
7	EXT
6	RQS
5	AB
4	BSY
3	EF3
2	EF2
1	EF1
0	EF0

Table 8-10 Status byte

EXT:
not used

RQS:
service request

AB:
Abnormal condition

	AB
0	Normal (no error)
1	Abnormal (error condition as specified by EF0-EF3)

BSY:
Busy

EF0-EF3:
Message flags

AB	EF3-EF0	Dec.	Message
0	0001	1	Message string available
1	1100	12	Number error
1	1101	13	Execute error
1	1110	14	Head/suffix error
1	1111	15	Syntax error

The RS232/V24 interface is not capable of generating a hard-wired service request as no connector pin is dedicated to this purpose. However, a controller programme that regularily checks the status of the RQS bit, may serve as a makeshift for the "real" hardwire request.

8.3.3 Device programming, RS232/V24

A list of the available programming commands and a description of the programming syntax to be used can be found in paragraph 8.4

Digitized in Heiloo the Netherlands Not for sale!

www.freeservicemanuals.info 1/19/2025

8.4. Programming Commands

Comments are printed in *italics.*

8.4.1 Identification and Status

HEADER:	DATA:	SUFFIX:	RETURNS:
Identification			
IDN? **ID?**			PHILIPS, PM5644/85..x.z *Identification and S/W version (x.z)*
Status Information			
STATUS?			*Returns a string with status information.*

Examples of a returned answer:

LOCKD	LOCKED to input
UNLCK	UNLOCKED to input

8.4.2 Signals

PATTERN **PA**	p *p:1-14 (pattern no.)*	ALT *(ALT selects the alternating sequence)*	
PATTERN? **PA?**			PATTERN p or PATTERN ALT *p: pattern no.,* (refer to appendix A.) *PATTERN ALT : the alternating sequence*
ALTERNATE **ALT**	n[,p] *[,p] extension assigning pattern no.* *n:1 or 2 (first or second alternating signal).* *p:1-14 (pattern no.)*		
ALTERNATE? **ALT?**	*plus no data/suffix* n *n:1 or 2 (first or second alternating signal).*		ALTERNATE n or ALTERNATE n,p *n:1 or 2 (first or second alternating signal).* *p:1-14 (pattern no.)*
DURATION **DUR**	t *t: 0.1-9.9 sec. (0.1sec. steps) or 10-99sec. (1sec. steps)*		
DURATION? **DUR?**			DURATION t *t: 0.1-9.9 with 0.1sec resolution and 10-99 with 1sec resolution.*

Digitized in Heiloo the Netherlands Not for sale!

www.freeservicemanuals.info 1/19/2025

Digitized by www.freeservicemanuals.info 2025

HEADER:	DATA:	SUFFIX:	RETURNS:

8.4.3 Attributes

ATTRIB		STD *resets attributes to STANDARD*	
ATTRIB?			STD (Standard attributes)
HELPER **HLP**		ON OFF	
HELPER? **HLP?**			HELPER *"string"* *string: ON or OFF*
LETTERBOX **LBOX**		ON OFF	
LETTERBOX? **LBOX?**			LETTERBOX *"string"* *string: ON or OFF*
REFLINE **REFL**	n *n: 23* *(second half line 23)* or *n: 623* *(first half line 623)*	ON OFF	
REFLINE? **REFL?**	n *n: 23 or 623*		REFLINE n *"string"* *n: 23 or 623* *string: ON or OFF*
LINE	n *n: 23* *(second half line 23)* or *n: 623* *(first half line 623)*	ON OFF	
LINE?	n *n: 23 or 623*		LINE n *"string"* *n: 23 or 623* *string: ON or OFF*

8.4.4 VITS, GHOST, and WSS

VITS		ON OFF	
VITS?			VITS *string* *string: ON or OFF*
GHOST		ON OFF	
GHOST?			GHOST *string* *string: ON or OFF*
TELETEXT		ON OFF	
TELETEXT?			TELETEXT *string* *string: ON or OFF*
WSS	"data" *"data": the binary WSS code* See table A.3 for valid codes	ON OFF STD *STD resets WSS codes to standard.*	
WSS?			WSS "data" string *"data": the binary WSS code* *string: ON or OFF*

Digitized in Heiloo the Netherlands Not for sale!

www.freeservicemanuals.info

HEADER:	DATA:	SUFFIX:	RETURNS:

8.4.5 Genlock

GENLOCK **GENL**		ON OFF	
GENLOCK? **GENL?**			GENLOCK *string* *string: ON or OFF*
GENLPHASE **PHASE**	n *n: -8000 < n < 2000 ns*		
GENLPHASE? **PHASE?**			GENLOCK PHASE *n* ns: *-8000 < n < 2000 ns*

8.4.6 Preset

STORE	n *n: 1-3*		
RECALL	n *n: 1-3*		

8.4.7 Lock

WSSLOCK		ON OFF	
WSSLOCK?			WSSLOCK *string* *string: ON or OFF*
ATTRIBLOCK		ON OFF	
ATTRIBLOCK?			ATTRIBLOCK *string* *string: ON or OFF*

Digitized in Heiloo the Netherlands
Not for sale!

www.freeservicemanuals.info 1/19/2025

Digitized by www.freeservicemanuals.info 2025

SERVICE INSTRUCTIONS

Digitized in Heiloo the Netherlands Not for sale!

www.freeservicemanuals.info 1/19/2025

9. General Information

9.1 Use of the Service Instructions

Troubleshooting is best carried out on a functional level using block diagrams. Reference is made to Chapter - "Block diagram description" for an overall description of the instrument. The block diagrams of each individual unit are described in the chapters to follow. These diagrams contain sufficient information for a skilled technician to carry out performance checks, adjustments, maintenance, and fault finding down to stage level. Fault finding to component level will however, require the use of appropriate circuit diagrams.

9.2 Safety

The opening of covers or removal of parts, except those to which access can be gained by hand, is liable to expose live parts. Accessible terminals may also be live.

The instrument must be disconnected from all voltage sources before performing any adjustment, replacement, maintenance, or repair which requires the instrument to be opened. If adjustment, maintenance, or repair of the opened instrument is unavoidable, it must only be carried out by a skilled person who is aware of the hazards involved.

9.2.1 Electrostatics Sensitive Devices

All ICs and many other semi-conductors are susceptible to electrostatic discharges (ESD).

Careless handling during repair can reduce life drastically.

ATTENTION

When repairing, make sure that you are connected with the same potential as the mass of the set via a wrist wrap with resistance. Keep components and tools also at this potential.

9.3 Block Diagram Symbols Description

Various symbols and conventions are used in the block diagram and a short description of these is given below.

Functional Block Information

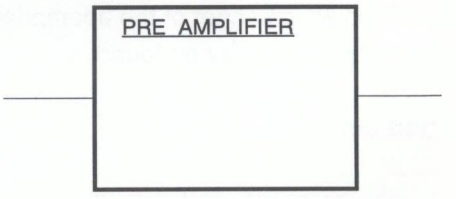

The underlined text within the block gives the function provided by the block.

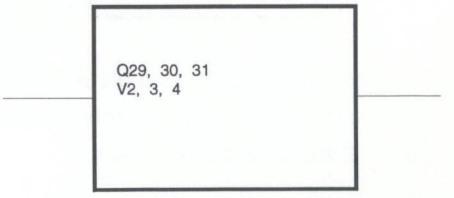

Text shows the major components in the block or stage.

Digitized in Heiloo the Netherlands Not for sale!

www.freeservicemanuals.info 1/19/2025

Digitized by www.freeservicemanuals.info 2025

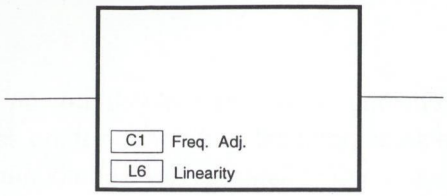

Inside some of the functional blocks, there are other smaller blocks. These show the adjustable components within the stage and what they adjust. An explanation of their use is given in the appropriate adjustment procedure.

The number in the lower right hand corner of the block shows on which sheet of the appropriate circuit diagram the block may be found.

The Dotted Line

A dotted line around a functional block (or stage) means that the block is either an option or not used in all versions of the instrument.

The Numbered Diamond

A number in a small diamond refers to a measuring point in the test and adjustment procedures. These symbols are cross-referenced both on the block diagram and its corresponding checkpoint sheet.

The Numbered Square

A number in a small square refers to an oscillogram number. These symbols are cross-referenced both on the block diagram and its corresponding checkpoint sheet.

The Numbered Circle

A number in a small circle refers to a test point physically provided on the PCB. These symbols are cross-referenced on the checkpoint sheet, its corresponding block diagram, and the circuit diagram.

Example:

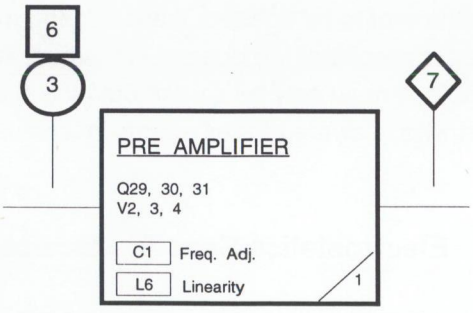

NOTE: All circuit diagrams shows values for the G-version. Where values differ in other version an * indicates this. Make sure when replacing a component that one of same value is re-installed as is removed. Values for other versions are found in "List of Electrical Parts".

Digitized in Heiloo the Netherlands Not for sale!

www.freeservicemanuals.info
1/19/2025

10. Wiring Diagram

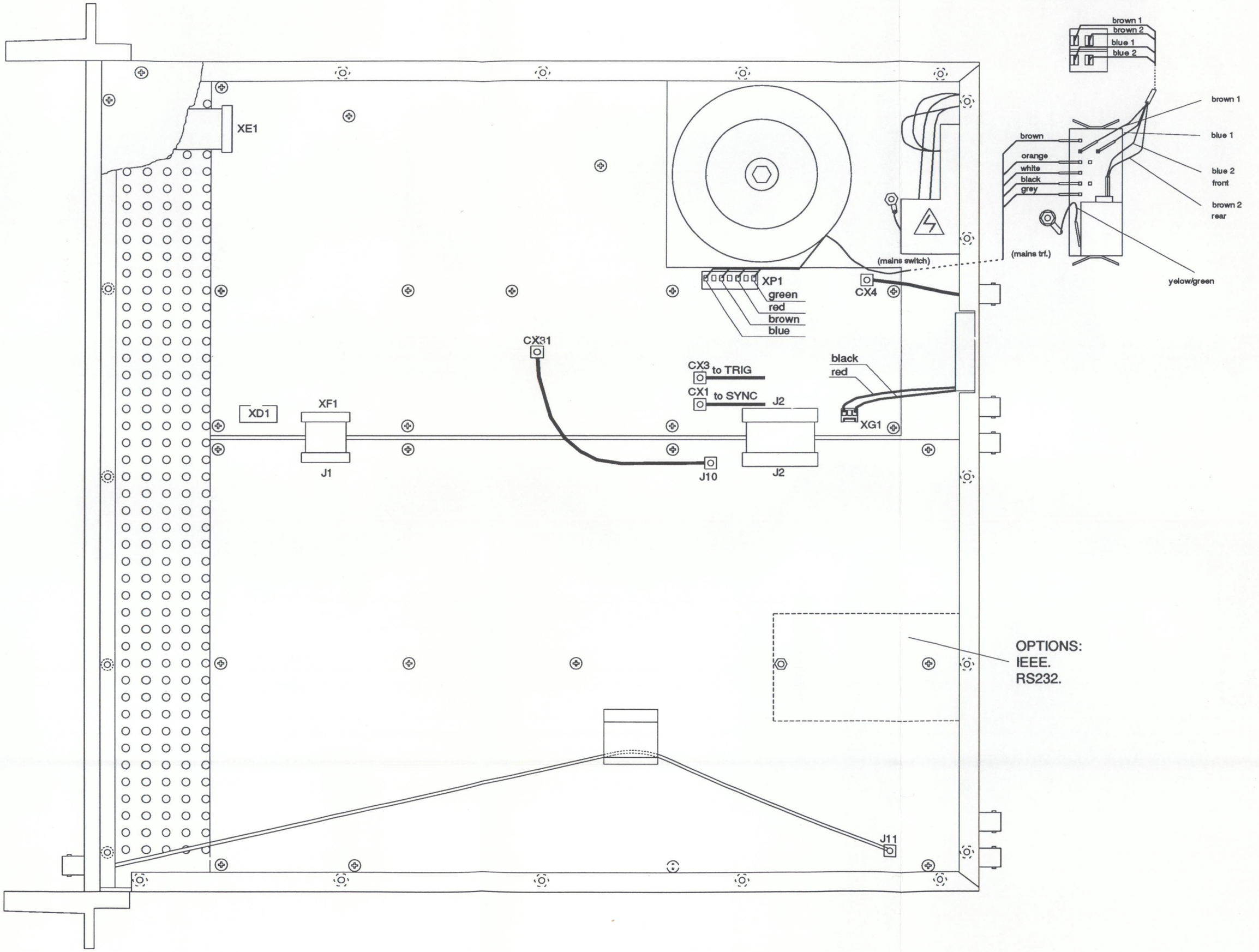

Fig. 10-1 Wiring diagram

Digitized in Heiloo the Netherlands
Not for sale!

www.freeservicemanuals.info
1/19/2025

11. Instrument Block Diagram Description

11.1 General Information

The circuitry of the PM 5644/85 or /86 can be divided into a number of functional blocks:

The master control block, which controls the function of the sync pulse generator and the pattern generator. The master control also handles communication among these two units, the front panel, and the remote interface, and it also controls the fan.

The sync pulse generator, which generates video sync reference signals and internally required clock signals. The sync pulse generator genlocks to an external black/white sync signal.

The pattern generator, which generates all test patterns and test lines.

The front panel, which is the interface between the instrument and the user via its pushbuttons and display.

11.2 Master Control Block - Unit 1

The master control block receives commands from:

- the front panel
- the remote interface

and distributes these commands to:

- the pattern generator
- the sync generator
- the remote interface.

Status signals for presentation on the front panel etc. are distributed in the opposite direction.

The master control block is made up of:

- a microcontroller (V401)
- an address latch (V402)
- program ROM (V403)
- the battery backed-up RAM (V404).

The watchdog circuit (V406) ensures recovery from deadlock errors. It also generates a reset pulse for the microcontroller at power-on.

Communication with the remote interface and the rest of the apparatus, is done by way of three separate I^2C bus connections. Communication with the front panel is through a fast (375 kbits per second) duplex bus (FRONT-RXD and FRONT-TXD) through microcontroller pins 10 and 11.

Once the microcontroller has completed its own initialization after power-on, it resets the other microcontrollers via MRES on pin 6. The UNIT-ACK signal to pin 12 is acknowledged by the pattern generator, forming a sort of hand-shake to speed up communications.

The temperature is measured at regular intervals by the NTC resistor (R411) and an AD converter inside V408. The temperature value is read by the microcontroller and converted to an appropriate fan voltage, which is then sent back via the DA converter in V408 to transistor Q410 and regulator V409, which supplies power to the fan.

11.3 The Sync Pulse Generator (SPG)

The PM 5644 may be synchronized to an external video signal (EXT SYNCHR). If the signal is not accepted, the instrument will go into a free-running state.

11.3.1 Input Clamp - Unit 1

The EXT SYNCHR signal from the rear plate is buffered by an input buffer (Q201 and Q202). The signal is then fed to a sync separator built around V205 and V206 which slices the sync signal (SYA) from the input signal. This signal is then sent to the logic block, Genlock Logic.

Digitized in Heiloo the Netherlands
Not for sale!

www.freeservicemanuals.info 1/19/2025

Digitized by www.freeservicemanuals.info 2025

From the logic block comes the $\overline{CLP}$ pulse, which is used in the Feed-Back Clamp (V207, Q203, Q204, and Q205). The clamping level can be adjusted at R226. The CLAMPED EXT signal output is at TP22.

11.3.2 Sync Slicer - Unit 1

The CLAMPED EXT signal comes to the sync slicer (V204-A) which is enabled by the signal ENLINE, and to a negative peak detector (V201 and V202) which finds the sync level. The sync level is used in V204-B to generate the EXT.AV signal, which tells whether the sync level is too low.

V203 selects between slicing on black level (on 1250-lines sync) and 50% level (on 625-lines sync) controlled by the HD signal.

The sliced sync LINE goes through the LOGIC block to the input phase detector.

11.3.3 Genlock Logic - Unit 1

The sliced sync (SYA) goes to the LOGIC block (V214, V215, and V216), which is a state machine clocked by CLK9. The logic block generates clamp pulses ($\overline{CLP}$), finds frame information from the input sync, and detects if there is any external sync at all.

The logic block sends FRAMEINT to the video control (Unit 2) if the INT signal is zero and sends V (field) information (LINE625), H information (UPH), no sync flag (NS) and EXT.LINE to the genlock control. EXT.LINE is processed by the LINE signal from the sync slicer.

11.3.4 Genlock Control - Unit 1

The genlock control logic block is made up of:

- microcontroller (V301)
- D/A converter (V302)
- latch (V304)
- counter (V305).

The microcontroller receives signals from the sync input circuit, e.g.:

EXT.AV	: Extern signal available.
NS	: No sync input.
LINE625	: Pulses in 625 lines system.
UPH	: Line sync signal.

From the master control processor the microcontroller receives:

MRES	: Reset pulse.
UNIT-SCL/SDA	: I^2C bus connection for commands and data exchange.

On the basis of the input signals, the microcontroller decides whether it should genlock to the incoming signal or to the built-in oven (the INT output).

The genlock phase offset is set by means of latch (V304) and counter (V305), course phase, and by means of D/A converter (V302) with op-amp (V303), fine phase. Counter (V305) is clocked by 6.75MHz, corresponding to phasesteps of 148nsec. The phase offset signals are then fed to the phase detector.

11.3.5 Input Phase Detector - Unit 1

The input phase detector receives the EXT.LINE input from:

- Genlock logic block
- Phase shifted INT line
- Fine phase control
- INT flag from genlock control.

If the INT flag is high, R317 controls the OCXO, and the generator works in internal mode.

If the INT flag is low, the OCXO is controlled by the phase locked loop, phase detector (V307), loop filter (V308), that make the phase of the EXT.LINE signal equal to phase shifted INT line.

The phase can be fine-adjusted by fine phase control.

Output from the block is FREQ ADJ, which controls the frequency of the OCXO.

Digitized in Heiloo the Netherlands Not for sale!

www.freeservicemanuals.info

11.3.6 OCXO - Unit 1

The oscillator is a DC-controlled X-tal oscillator. When it is working, the 13.5MHz clock at pin 1 should be present either as a free-running oscillator or locked to the input sync. Temperature is sensed at pin 2, and the control voltage at pin 3.

This unit should be replaced if defective.

11.3.7 Oven Temperature Regulator - Unit 1

The oven temperature regulator maintains a constant oven temperature by controlling the power fed to the oven by regulator (V315). In static conditions, the power fed to the oven is equal to the power loss through the insulation material. The voltage representing the temperature as measured by the NTC resistor in the OCXO is compared to a reference voltage. The voltage difference is fed to a PI (Proportional Integrating) regulator situated around V312-A. The resulting power control signal at output pin 1 is amplified V312-B is used to guarantee correct operation of power source (V316).

11.3.8 Sinewave to TTL Converter - Unit 2

From Unit 1 comes the 13.5MHz signal as a sine signal in a coaxial cable. It is converted to TTL in Q12, Q13, and Q14. The signal from Q14 goes to the clock buffer (V24). The clock buffer has four 13.5MHz TTL clock outputs which are used in Unit 1:

- CLK
- CLKPLD
- DACCLK
- DACCLK1.

11.4 The Pattern Generator - Unit 2

11.4.1 Video Control

The generator is controlled by microcontroller (V10), PROM (V12), and RAM (V13). The microcontroller receives control commands from the master controller through the UNIT I^2C bus at V9. The microcontroller is synchronized to the SPG by a line interrupt (FH) and frame interrupt (FRAME-INT).

The microcontroller controls three ports: V30, V32, and V33.

The PROM contains the program code which enables the microcontroller to:

- Handle the I^2C interface for communication with the rest of the instrument via the master control.
- Generate the correct patterns.
- Insert VITS lines in the generated pattern (WSS code, VITS, Ghost reference signal, and teletext).

11.4.2 H-Counter/Logic Decoder (H-CLD) Unit 2

This block consist of 3 PLDs (V45, V46, and V47) and 2 ICs (V26 and V27) used only as buffers.

The 3 PLDs are the master control of the circuit: they divide the 13.5MHz clock down to line frequency and supply the rest of the circuit with control pulses.

The horizontal divider (HOR.DIV.) supplies divided clock to the rest of circuit CLK9, which is an 6.75MHz clock used on Unit 1 for sync pulses and as a clock.

The HOR.DIV. generates an FH pulse that is used to interrupt the video controller.

The HOR.DIV. controls the segment counter, which counts every 32 clock pulses by means of CLK2.25 and are reset every line by means of LDC.

Digitized in Heiloo the Netherlands Not for sale!

www.freeservicemanuals.info 1/19/2025

Digitized by www.freeservicemanuals.info 2025

The H-CLD controls the memory bank via $\overline{EN0}$, $\overline{EN1}$, $\overline{EN2}$, and $\overline{EN3}$, which control the multiplexing of the PROMs.

The H-CLD generates CLK.CH1, CLK.CH2, and CLK.CH3, which clock data from the PROMs into the Latches, and it generates CLK/2, which controls the multiplexing from 6.75MHz to a 13.5MHz data stream. It also supplies two address bits (AP2 and AP3) for the memory bank.

11.4.3 Segment Counter - Unit 2

The picture is made up of segments 32 clock pulses long.

The segment counter consist of V34-V38. The segment counter is clocked every 32 clock pulses by CLD2.25 and points to the next segment address for the segment decoder via AS0-AS19. Every line is preset by LDC to the value DC2-DC17, which comes from the video control.

11.4.4 Segment Decoder - Unit 2

The segment decoder (V39-V44) takes the address (AS0-AS19) and converts it to a segment number (AP4-AP19), in four PROMs (V39, V40, V43, and V44).

11.4.5 Memory Bank - Unit 2

The memory bank uses a relatively slow, but very wide memory and multiplex the data up to full clock speed.

The PROMs are addressed at an $\frac{13.5}{8}$MHz rate by AP2-AP19. The PROM bank is 256 bit wide at this point. 16 of these bits are unused, two each from V301, V303, V305, V307, V201, V203, V205, and V207.

The rest of the bits are clocked into 24 10-bit D-FFs by CLK.CH1, CLK.CH2, and CLK.CH3: one for each channel, 80 bits per each clock pulse.

The 24 10-bit D-FFs are organized so the data can be multiplexed into 6 10-bit data stream. The multiplexing is done via output enable on the D-FFs, for example, 10 bits are clocked into each of V102, V104, V106, and V108 by CLK.CH1. The bits are enabled sequentially via $\overline{EN0}$, $\overline{EN1}$, $\overline{EN2}$, and $\overline{EN3}$. The data are clocked into V109 and V119 at a 6.75MHz rate by CLK and CLK/2. V109 and V119 are used to multiplex from 6.75MHz to 13.5MHz. The same principle is used for the rest of the memory bank. So we end up with three 10-bit data streams at a 13.5MHz rate at outputs V109, V119, V209, V219, V309, and V319. The data are fed to a multiplexer that selects one of the three data streams for the DAC.

11.4.6 Sync & Trigger Generator - Unit 2

From the H-Counter's 10 LSB (CLK/2B + A1U - A9U) and four signals from V10, V25 generates a composite SYNC signal and a TRIG-signal. The TRIG signal is high in the active part of helper lines and low everywhere else, independent of the actual generated pattern.

11.4.7 Analog Section - Unit 2

The 13.5MHz data stream from the multiplexer is fed to the Digital-to-Analog Converter (DAC).

Data are loaded into the DAC (V121) when the clock input of the DAC, DACCLK1 is low and then converted to an analog current.

After lowpass filtering the signal is buffered in an amplifier (V122), which also performs the necessary SinX/X compensation.

The signal is then fed to two output amplpifiers. V123 drives 2 outputs: one on the front plate, and one on the rear plate. V123 drives one output on the rear plate.

Digitized in Heiloo the Netherlands Not for sale!

www.freeservicemanuals.info

11.4.8 Synchr. Amplifier - Unit 1

The synchr. amplifier converts the TTL sync ($\overline{\text{SYNC}}$ from Unit 2) to analog sync with 200nsec. rise time. With PP3 the output level can be selected to either 2 or 4V into 75Ω.

The V pulse and H pulse driver uses an flip-flop (V2) to make both the inverted and non-inverted signal available. The flip-flop is clocked by CLK9; SW1 and SW2 are used to select the polarity. The output buffer is V3. The VDRIVE (not used) and HDRIVE (HTRIG) signal come from Unit 2.

11.5 Front Panel Unit

The front panel unit handles the user interface of the PM 5644 via the master controller. It controls and displays the various status and settings of the PM 5644. The front panel unit consists of three parts:

1. A Controller Unit built around an 80C52 microcontroller (V1) and supported by an address-latch (V2), a ROM (V3) and an EE-PROM (V7). The unit also contains a read/write-control (V4) for the LCD module, a contrast control (V5 and V6) and a backlight setup (R5-7).
2. An LCD module (2-lines by 40-characters), complete with drivers and an LED backlight.
3. A Keyboard Unit containing a keyboard port (V21), all switches, an LED port (V22), and the LED indicators.

The function of the front panel unit is controlled by the controller, whose ROM contains the program code for the microcontroller. The EE-PROM is used for storage of vital information such as contrast level.

After reset at power-up (MRES) and receipt of requested instrument - status and data, the controller enters a diagnostic mode in which any detected error will be displayed in the LCD - module. If no errors are detected, the controller will enter normal mode.

11.5.1 Controller Unit - Unit 3A

Communication with the rest of the instrument is performed by a serial interface (FRONT-BUS) using the built-in serial interface of the microcontroller (TXD/RXD). All operational control and some configuration is carried out via menus by means of four cursor- and one execute- key in conjunction with the LCD module.

11.5.2 LCD Module

Update of the LCD module connected to the microcontroller is performed via the eight-bit data bus and the read/write control (DISP-EN). For temperature compensation of the contrast level, the microcontroller reads the temperature at ADC-1 of V5 using a two-line I^2C interface (DISP-SCL/DISP-SDA).

The backlight level (VBL) is set by resistors R5-7.

11.5.3 Keyboard Unit - Unit 3B

Scan and update of the keyboard unit is performed via an I^2C interface (KEYB-SCL/KEYB-SDA), using V21 to read actual switch - status (S1-10) and V22 for updating UNLOCKED and REMOTE LEDs.

11.6 Power Supply - Unit 1

The power supply consists of:

- a mains transformer
- a rectifier
- five voltage regulators

V1 is a switch-mode regulator which generates the +5V voltage that is used throughout the generator.

The +8V and -8V voltages are generated by linear regulators V90 and V91.

Digitized in Heiloo the Netherlands Not for sale!

www.freeservicemanuals.info 1/19/2025

The -5V voltage is generated in a switch-mode circuit, built around V40.

On the power board (Unit 1), 8 local regulators (V300, V314, V261, V267, V305, V313, V340, and V341) supply power to noise-sensitive circuits.

Digitized by www.freeservicemanuals.info 2025

Digitized in Heiloo the Netherlands Not for sale!

www.freeservicemanuals.info

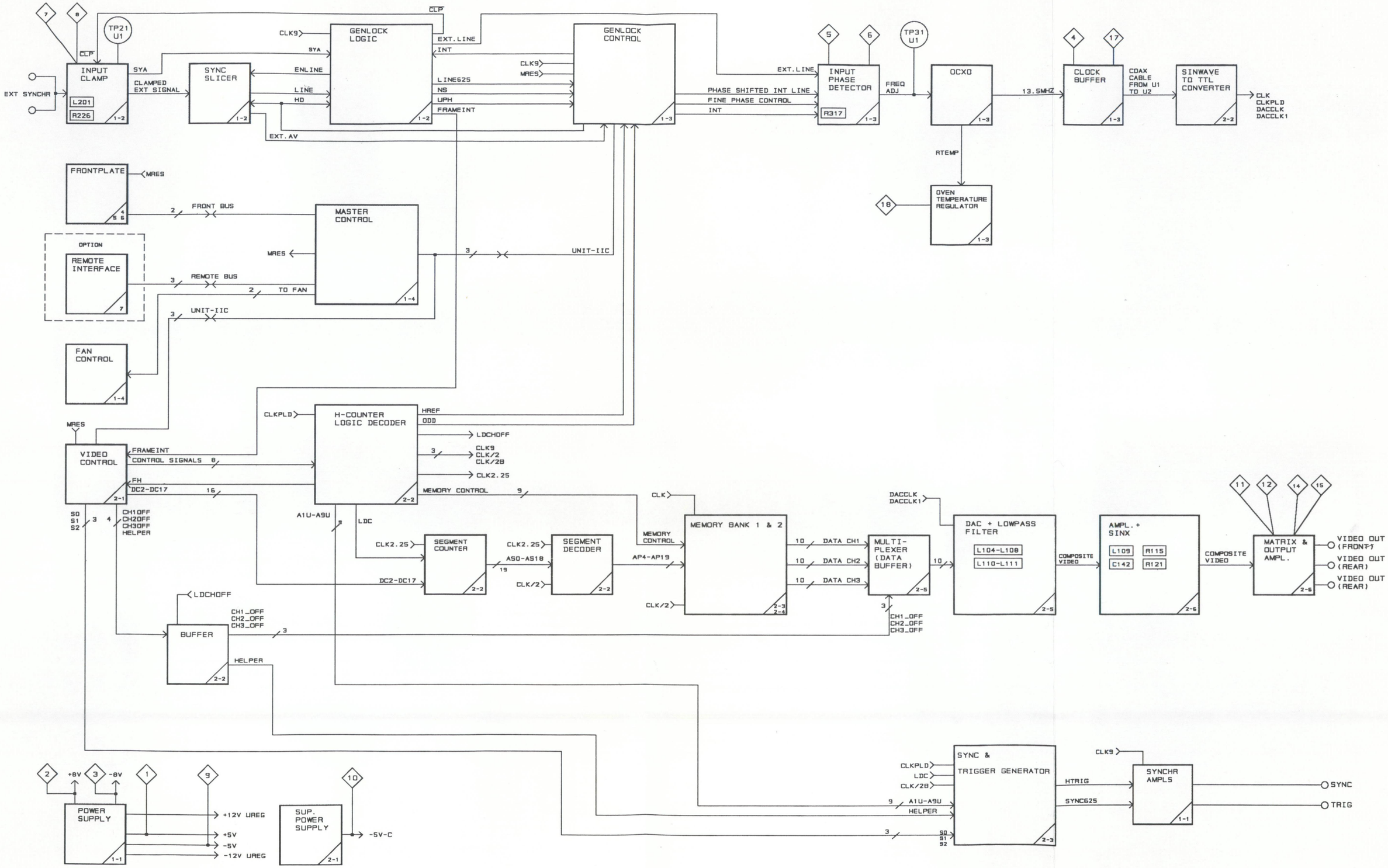

Fig. 11-1 Instrument Block Diagram

Digitized in Heiloo the Netherlands
Not for sale!

www.freeservicemanuals.info

12. Performance Check

Test Equipment:

Frequency counter (0.1 ppm)	: e.g. PM 6669
Video generator	: e.g. PM 5640AG
Video level meter	: e.g. VM700
Oscilloscope	: e.g. PM 3094
Monitor	

1. Master oscillator frequency:

– No reference signal is connected to PM 5644; the front plate LED "UNLOCKED" is lit.
– Connect the frequency counter to ⟨17⟩ (V311, pin 2 - Unit 1).
– Check that the frequency is 13500000 Hz ±3Hz.

2. SYNC OUTput amplifier:

– Conncect an oscilloscope to SYNC OUT and terminate with 75Ω.
– Check PP3 on Unit 1: must be in position "2V".
– Check that the amplitude is 2V ±0.2V.

3. TRIG OUTput amplifier:

– Conncect an oscilloscope to TRIG OUT and terminate with 75Ω.
– Check that the amplitude is 1.9V ±0.3V.
– Move PP2 on Unit 1 to the other position.
– Check that the amplitude is 1.9V ±0.3V.

4. Video amplitude:

– Select VITS ON.
– Measure the white amplitude in line 17.

Results:

VIDEO OUT, rear (BU1)	: 700mV ±7mV.
VIDEO OUT, rear (BU2)	: 700mV ±7mV.
VIDEO OUT, front	: 700mV ±7mV.

5. Frequency response:

– Conncect VIDEO OUT to an osilloscope.
– Select VITS ON.
– Check filter response by examine the following signals:

Line 18, multiburst:

Frequency response : ±1%.

Line 17:

The 2T-pulse, the pre- and post- ringing must be symmetrical.

20T gain	: 0% ±0.5%.
20T delay	: 0nsec ±5nsec.

6. Genlock:

– Connect a sync signal to EXT SYNCHR; the front plate LED "UNLOCKED" is off.
– PM 5644 should be genlocked to the external sync-signal.

Digitized in Heiloo the Netherlands
Not for sale!

www.freeservicemanuals.info 1/19/2025

13. Test and Adjustments

Measuring Equipment:

Oscilloscope : e.g. PM 3250
Voltmeter (DVM) : e.g. PM 3094
Frequency counter (0.1 ppm) : e.g. PM 6669
Video generator : e.g. PM 5640AG
Video level meter : e.g. VM700
Hot air source ar least 70°C
Monitor

Reset/power up

- Begin the procedure with a "Master Reset". This is done by pressing the buttons ◄ , ► , and EXECUTE while power is switched ON. The display shows the message "MASTER RESET".
- Switch power OFF and ON again.
- Check that the display shows "Internal Test passed". This message appears for only a few seconds.
- At power-on following error, or combination of errors can occur:

Error #	Error Cause
E(01)	Generator memory back-up not valid.
E(02)	Generator µP not responding.
E(04)	Sync µP not responding.
E(08)	Master memory back-up not valid.
E(10)	Master µP, local I^2C communication fails.
E(20)	Front plate memory back-up not valid.
E(40)	Front plate, local I^2C communication failed.
E(80)	Serial communication between front plate and master-µP failed.

Allow 1 hour of warm-up time before adjustments are made.

Make adjustments (checks) at ambient temperature in the range of 20°C to 30°C.

13.1 Voltage Checks

13.1.1 Power Supply - Unit 1

Connect DVM ground lead to (GND)

1. Using the DVM, check for +5.1V ±0.2V at ◇1 (V214, pin 24).
2. Using the DVM, check for +8V ±0.3V at ◇2 (V303, pin 8).
3. Using the DVM, check for -8V ±0.3V at ◇3 (V303, pin 4).
4. Using the DVM, check for +8V ±0.3V at ◇4 (V352, pin 7).
5. Using the DVM, check for +8V ±0.3V at ◇5 (V308, pin 7).
6. Using the DVM, check for -8V ±0.3V at ◇6 (V308, pin 4).
7. Using the DVM, check for +5V ±0.2V at ◇7 (V204, pin 14).
8. Using the DVM, check for -5V±0.2V at ◇8 (V204, pin 13).

13.1.2 Generator Board - Unit 2

Connect DVM ground lead to (GND)

1. Using the DVM, check for -5V ±0.2V at ◇9 (V121, pin 15).
2. Using the DVM, check for +5V ±0.2V at ◇11 (V123, pin 7).
3. Using the DVM, check for +5V ±0.2V at ◇12 (V223 pin 7).
4. Using the DVM, check for -5V ±0.2V at ◇14 (V123, pin 4).
5. Using the DVM, check for -5V ±0.2V at ◇15 (V223, pin 4).

Check Oven Oscillator - Unit 1

Using the DVM, check for 0V±0.5V at ◇18 (V312, pin 3).

Digitized in Heiloo the Netherlands Not for sale!

www.freeservicemanuals.info 1/19/2025

Digitized by www.freeservicemanuals.info 2025

13.2 Adjustments, Power Supply - Unit 1

1. Master Oscillator frequency:

- No reference signal is connected to PM 5644, the front plate LED "UNLOCKED" is lit.
- Connect the frequency counter to ⟨17⟩ V311, pin 2.
- Check that the frequency is 13500000 Hz ±1Hz.
- If not OK, adjust R317.

2. Subcarrier notch:

- Connect a PAL-G signal (with burst) to EXT SYNCHR. The front plate LED "UNLOCKED" is off.
- Connect an oscilloscope to TP21.
- Adjust L201 for minimum chroma signal.

3. Input clamp level:

- Connect a black burst signal til EXT SYNCHR.
- Connect an oscilloscope-probe to R225 (the terminal connected to R226 wiper).
- Check that the black level voltage is 0V ±20mV.
- If not OK, adjust R226.

4. Check of the fan control circuit:

- When R411 is heated with hot air the fan must start.

5. Check SYNC OUTput amplifier:

- Connect an oscilloscope to SYNC OUT and terminate with 75Ω.
- Check PP3; must be in position "2V".
- Check that the amplitude is 2V ±0.2V.
- Check that the rise-time is 200ns ±30ns.
- Check that the fall-time is 200ns ±30ns.

6. Check TRIG OUTput amplifier:

- Connect an oscilloscope to TRIG OUT and terminate with 75Ω.
- Check that the amplitude is 1.9V ±0.3V.
- Move PP2 to the other position.
- Check that the amplitude is 1.9V ±0.3V.

13.3 Adjustments, Generator Board - Unit 2

1. Black level:

- Connect VIDEO OUT (BU1) to an oscilloscope.
- Check that black level is 0V ±10mV.
- If not OK, adjust R115.

2. Video amplitude - BU1:

- Connect VIDEO OUT (BU1) to a video level meter.
- Select VITS ON.
- Measure the white reference bar in line 17.
- Check that the amplitude is 700mV ±0.5%.
- If not OK, adjust R121.

- If necessary repeat item 1, black level.

3. Video amplitude - BU2:

- Connect VIDEO OUT (BU2) to a video level meter.
- Select VITS ON.
- Measure the white reference bar in line 17.
- Check that the amplitude is 700mV ±0.5%.

4. Check the anti-aliasing filter (low pass filter):

- Conncect VIDEO OUT to an osilloscope.
- Select VITS ON.
- Check filter response by examining the following signals:

  Line 18, multiburst:
  burst amplitude must be within 1% of the white reference bar.
  Line 17:
  the 2T pulse and the pre- and post-ringing must be symmetrical.
  the 20T buttom line must not be visible
  S-shaped or show visibly gain error.

Digitized in Heiloo the Netherlands Not for sale!

www.freeservicemanuals.info

13.4 Filter Adjustment

If for some reason it is necessary to adjust the filter, you need a network analyzer to align the three zeros and obtain the correct delay-characteristic in the filter. The amplitude-characteristic of the filter is easier to adjust with an oscilloscope looking at VITS-line 18.

Test equipment:

Network analyzer : e.g. HP3577A
Two 50Ω to 75Ω impedance converters.
Test cable : *see drawing.*

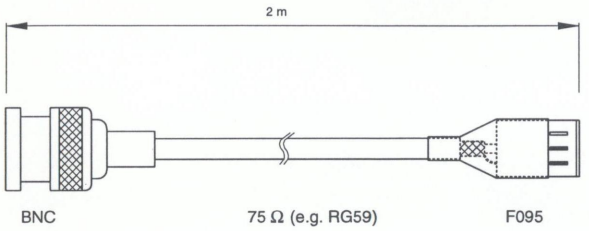

Procedure:

- Connect VIDEO OUT (BU1) to a network analyzer input using a 50Ω to 75Ω impedance converter.
- Disconnect jumper PP11.
- Connect network analyzer output to PP1 with test cable using a 50Ω to 75Ω impedance converter.

- Adjust the three zeros:
  L106 : 18.6MHz
  L108 : 10.9MHz
  L107 : 9.0MHz
- Adjust the delay-equalizer (L111/L110 and L104/L105) so the delay-variation is less than 5ns to 5MHz.
- Adjust the Sinx/x correction to obtian the best high frequency response; the peak at 5.5MHz should be 2.5dB.

- Connect VIDEO OUT (BU1) to an oscilloscope.
- Connect jumper PP11.
- Check that multiburst (VITS line 18) is within 1% of the reference white bar.
- If not OK, readjust Sinx/x correction or (only slightly) the delay equalizer section.

- Repeat the delay adjustment (using the network analyzer) and frequency check (using the oscilloscope) if necessary.

Fig. 13-1 Filter Characteristic

Digitized in Heiloo the Netherlands
Not for sale!

www.freeservicemanuals.info

1/19/2025

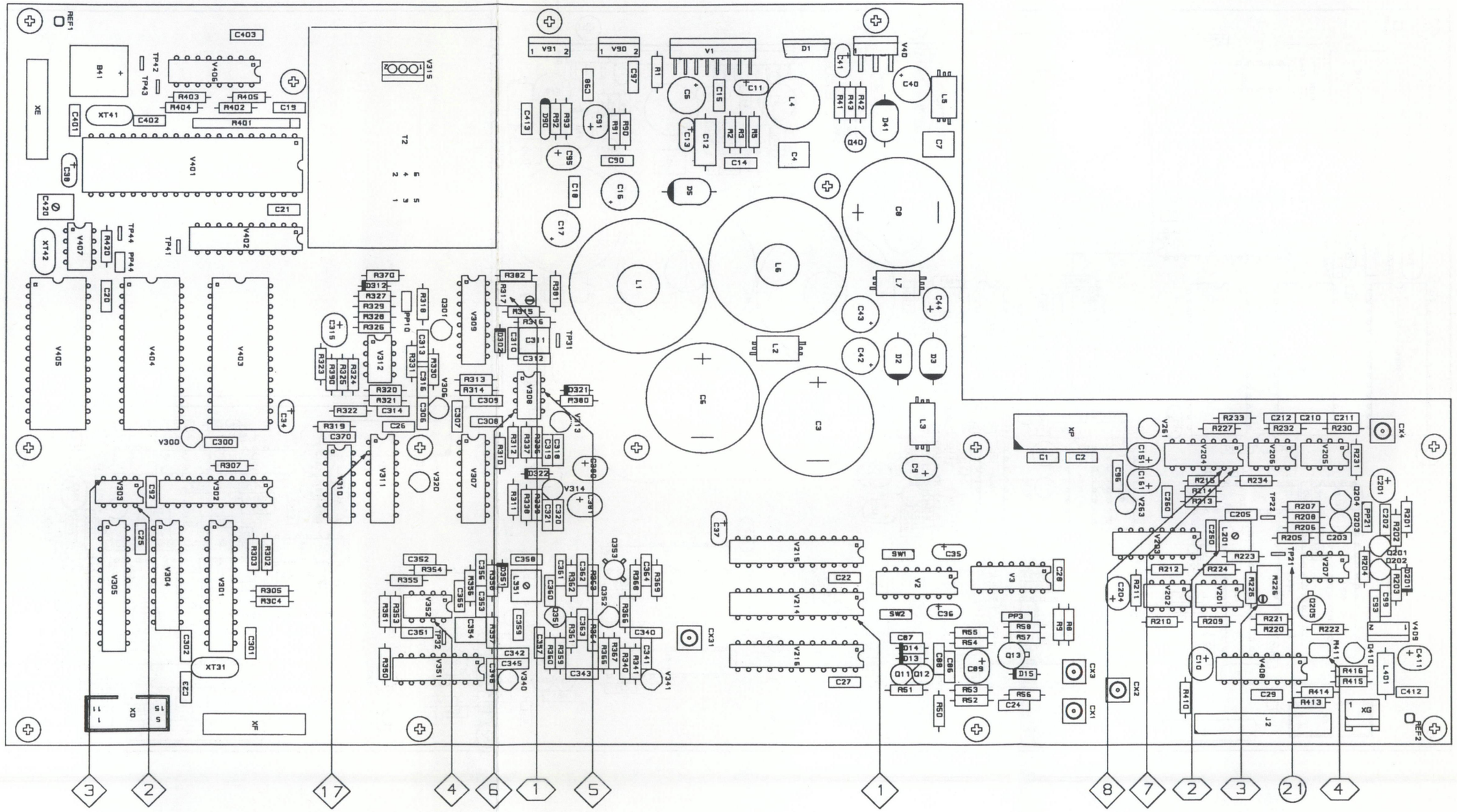

Fig. 13-2 Check points, Power Supply - Unit 1

Digitized in Heiloo the Netherlands
Not for sale!

www.freeservicemanuals.info
1/19/2025

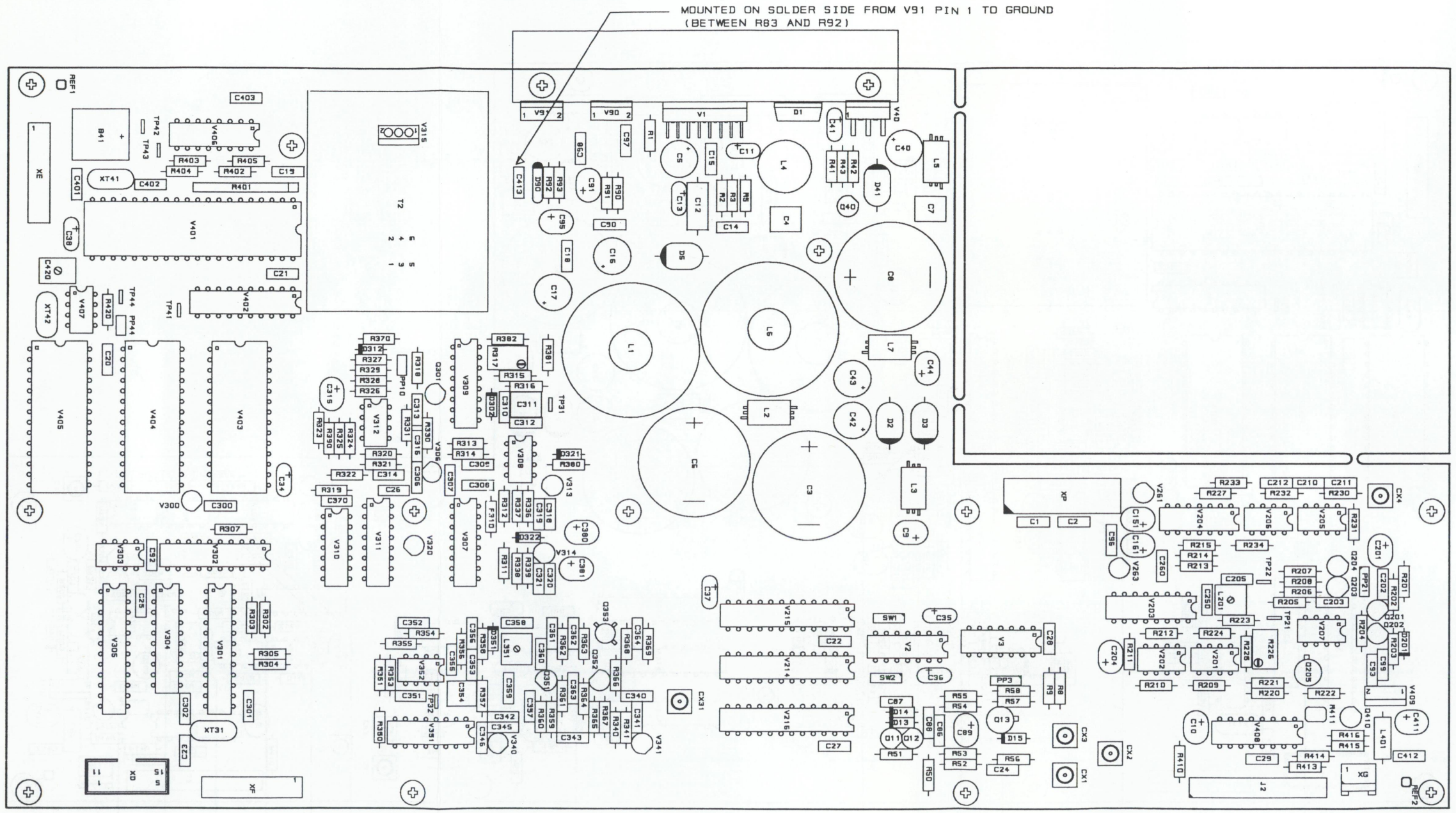

Fig. 13-3 Component location, Power Supply - Unit 1

Digitized by www.freeservicemanuals.info 2025
Digitized in Heiloo the Netherlands
Not for sale!

www.freeservicemanuals.info

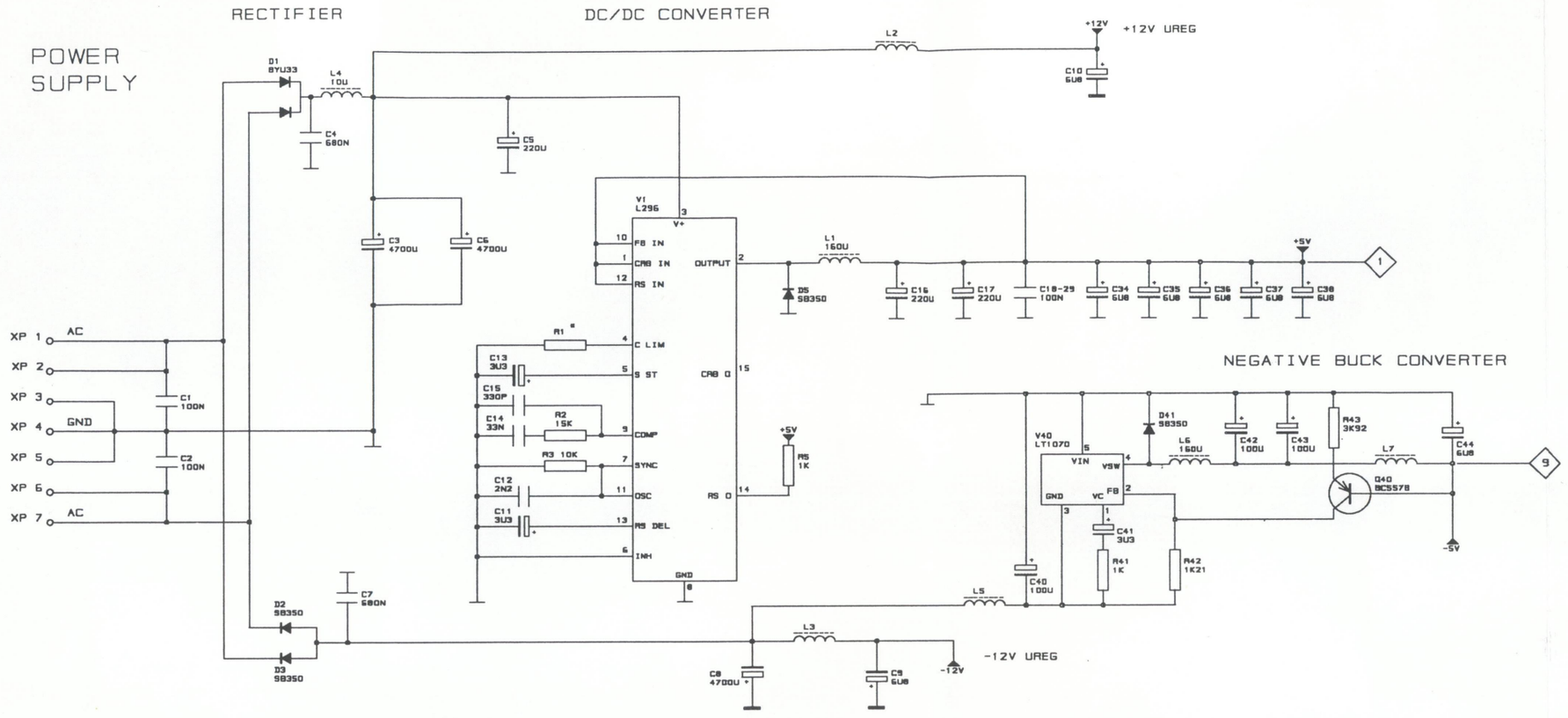

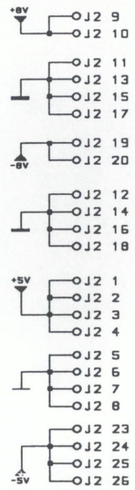

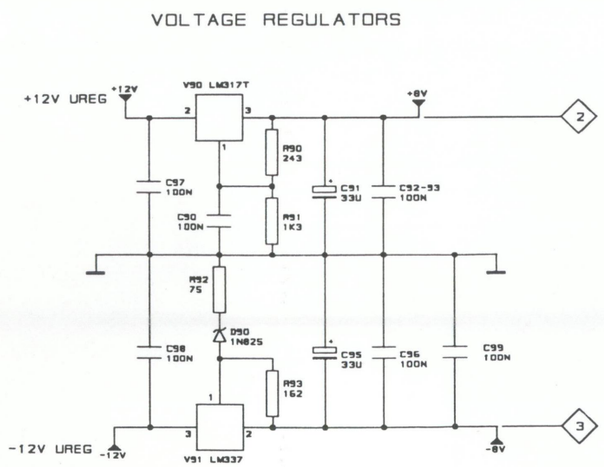

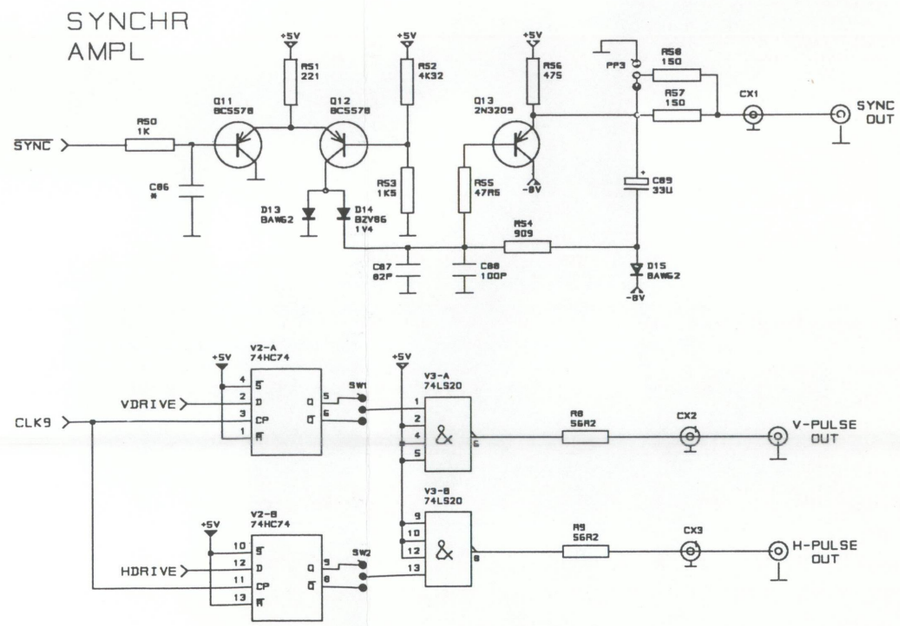

* NOT MOUNTED

109 78180

Fig. 13-4 Circuit diagram, Power Supply - Unit 1, sh.1

Digitized in Heiloo the Netherlands

Not for sale!

www.freeservicemanuals.info

1/19/2025

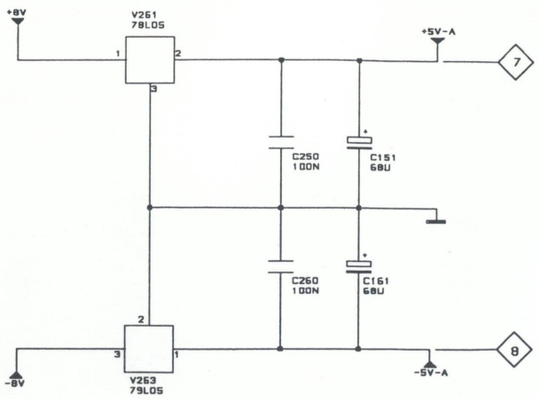

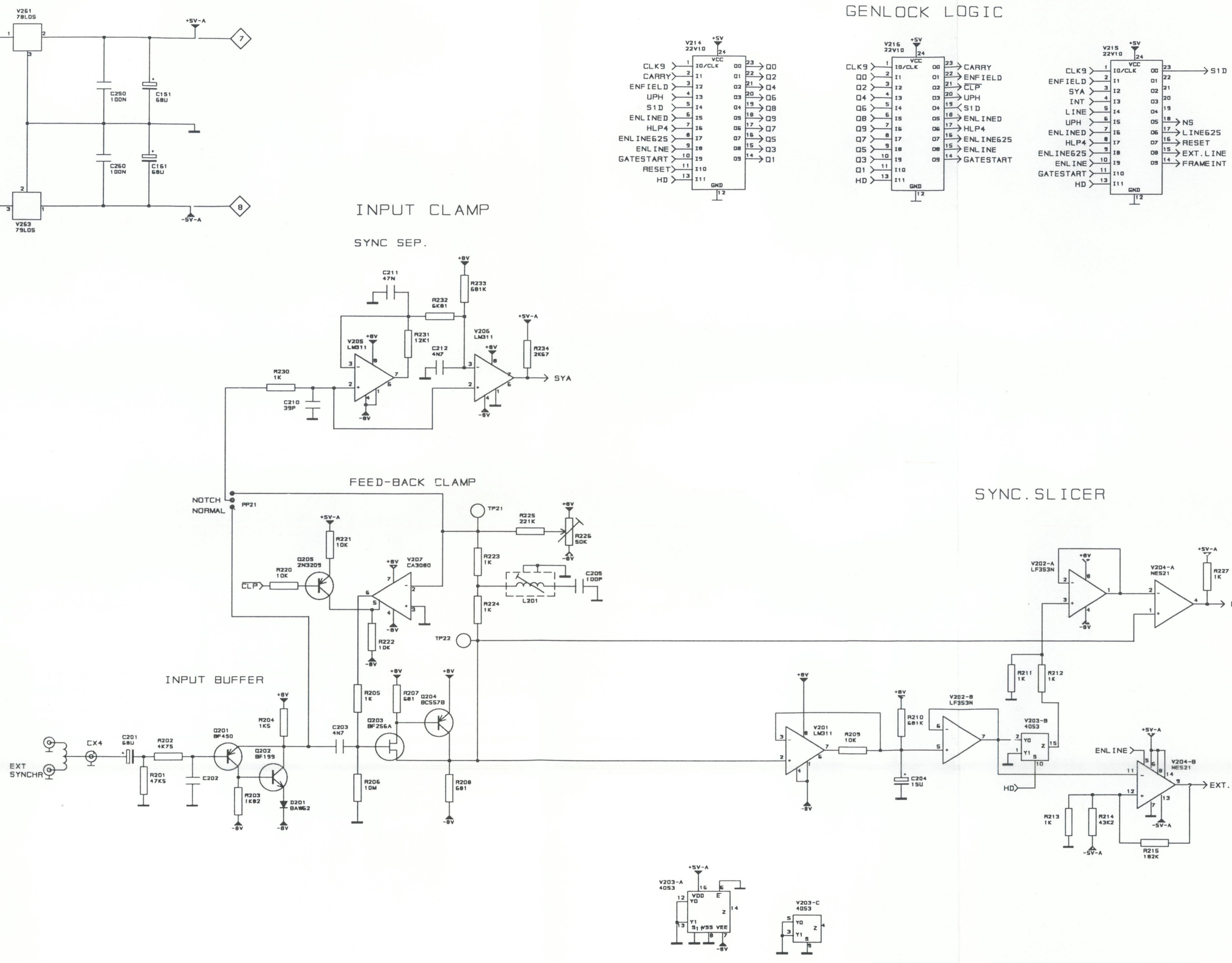

Fig. 13-5 Circuit diagram, Power Supply - Unit 1, sh.2

Digitized in Heiloo the Netherlands
Not for sale!

www.freeservicemanuals.info

1/19/2025

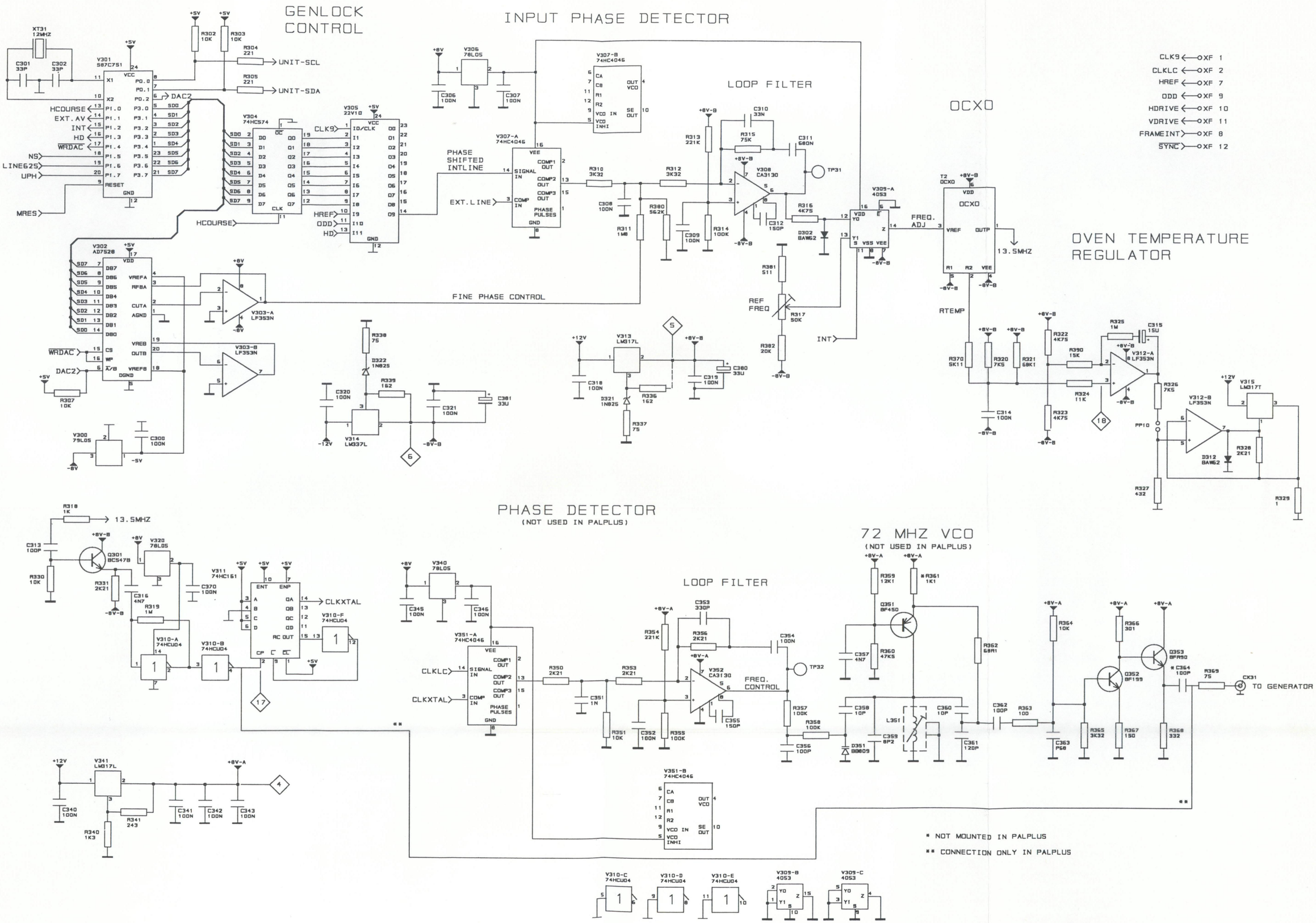

Fig. 13-6 Circuit diagram, Power Supply - Unit 1, sh.3

Digitized in Heiloo the Netherlands
Not for sale!

www.freeservicemanuals.info

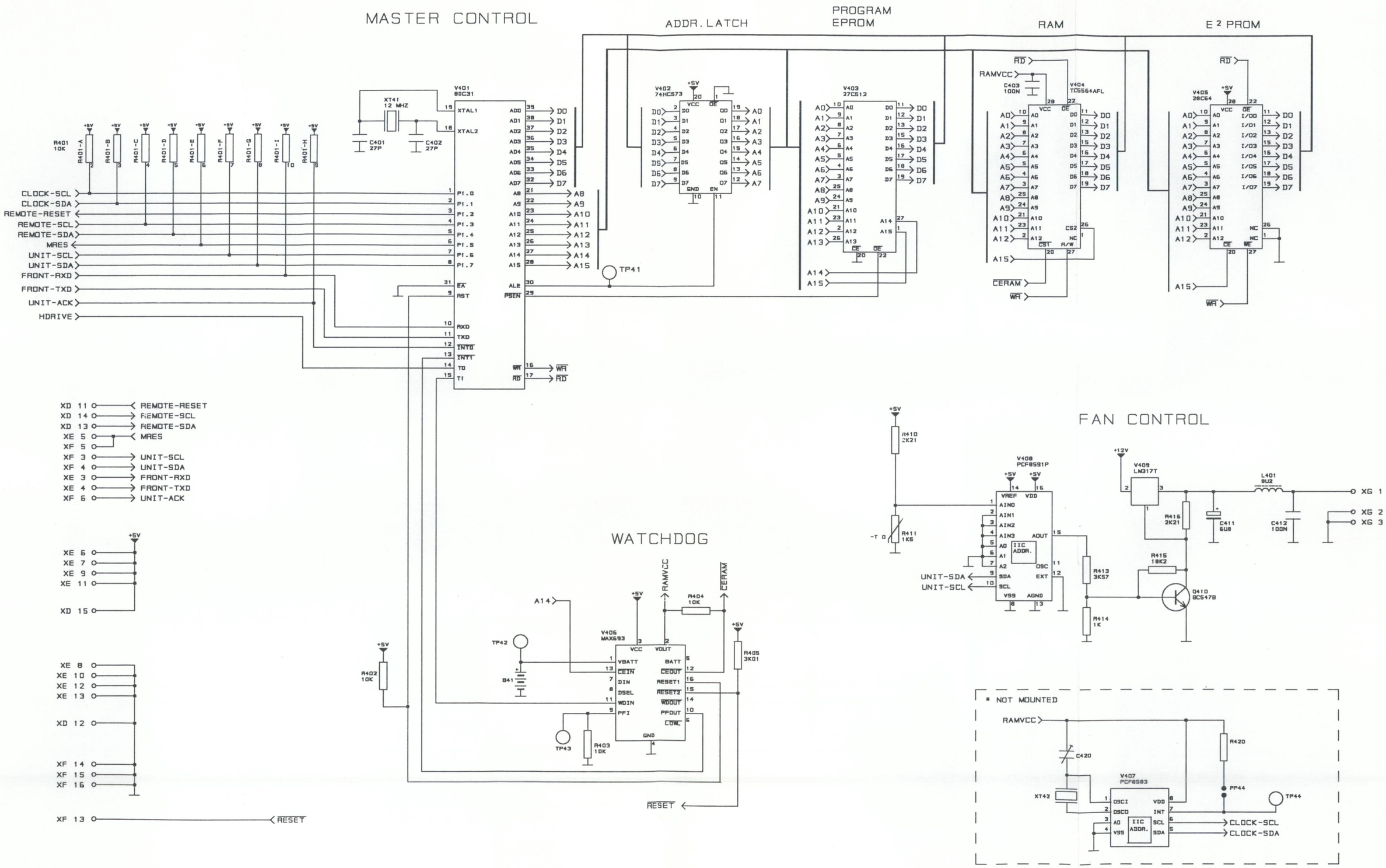

Fig. 13-7 Circuit diagram, Power Supply - Unit 1, sh.4

Digitized in Heiloo the Netherlands

Not for sale!

www.freeservicemanuals.info

1/19/2025

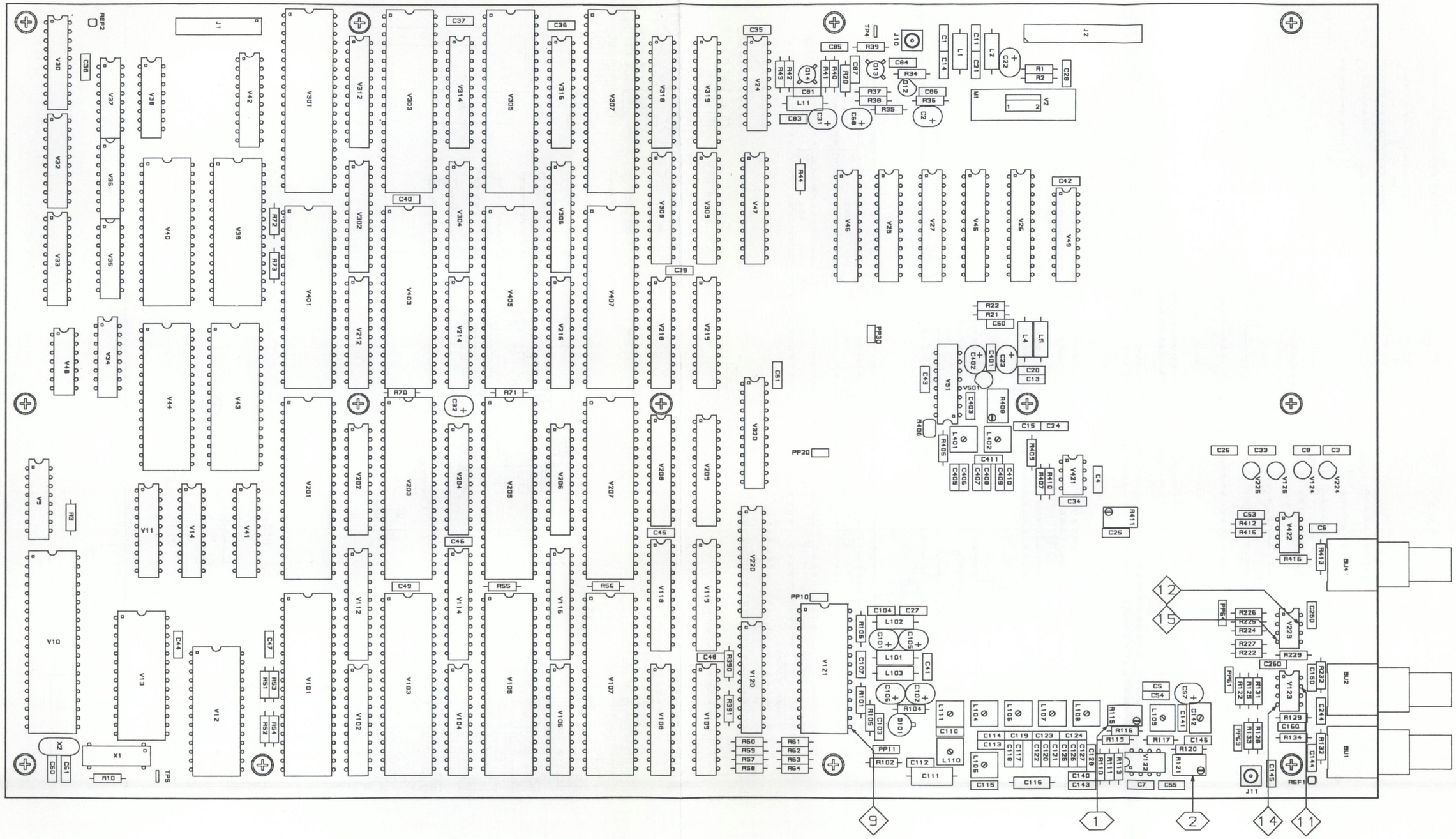

Fig. 13-8 Check points, Generator Board - Unit 2

Digitized in Heiloo the Netherlands
Not for sale!

www.freeservicemanuals.info
1/19/2025

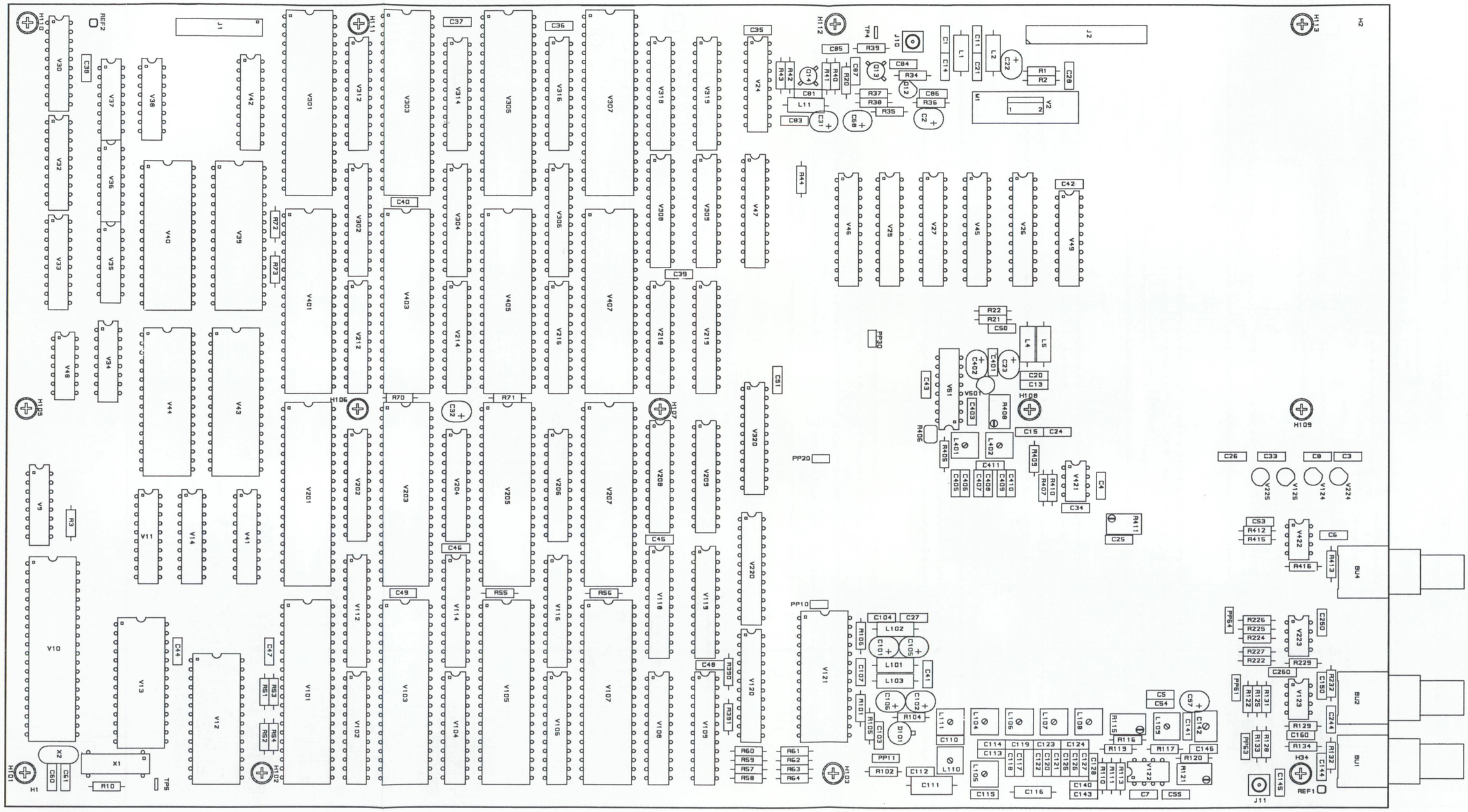

Fig. 13-9 Component location, Generator Board - Unit 2

Digitized by www.freeservicemanuals.info 2025
Digitized in Heiloo the Netherlands
Not for sale!

www.freeservicemanuals.info

1/19/2025

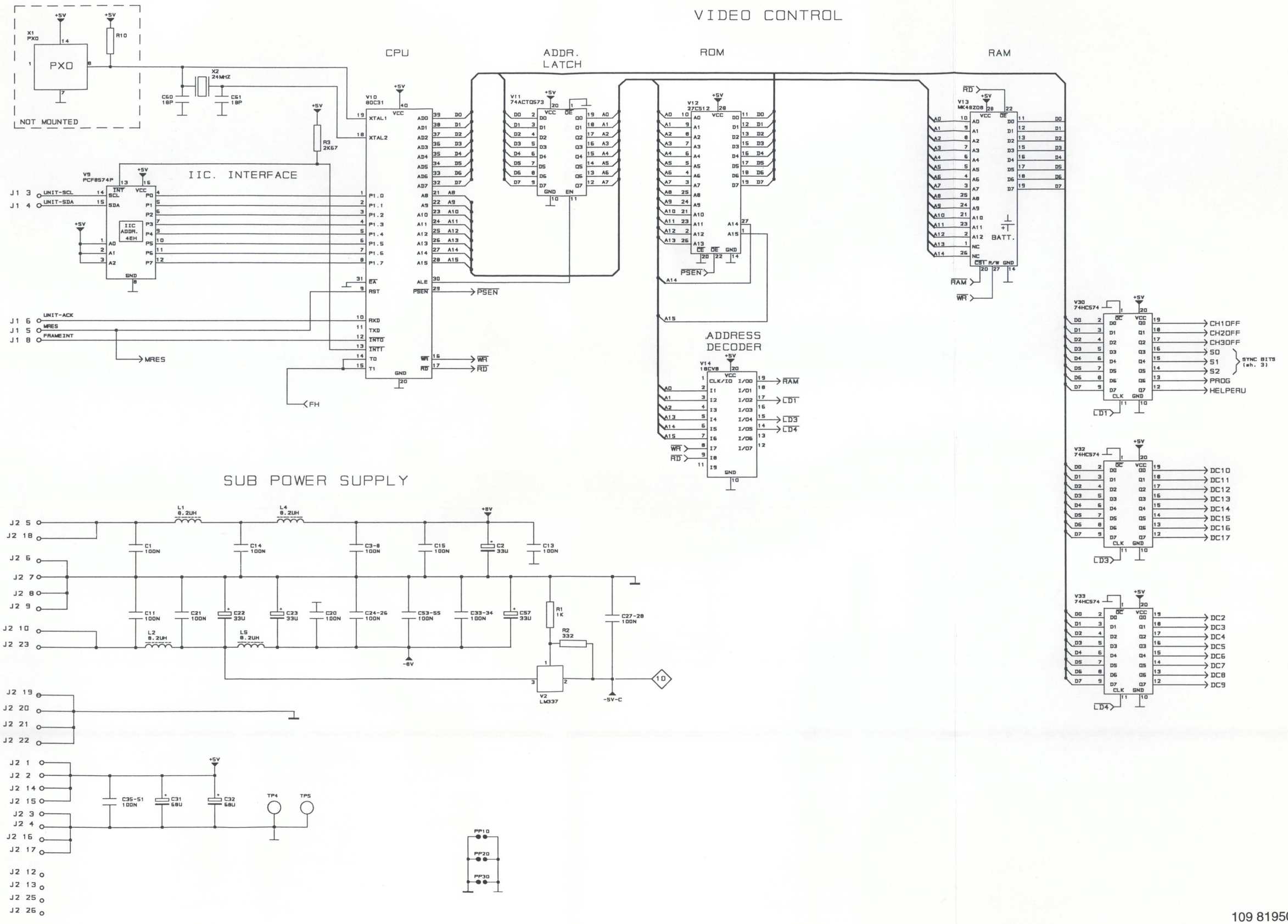

109 81950

Fig. 13-10 Circuit diagram, Generator Board - Unit 2, sh.1

Digitized in Heiloo the Netherlands
Not for sale!

www.freeservicemanuals.info

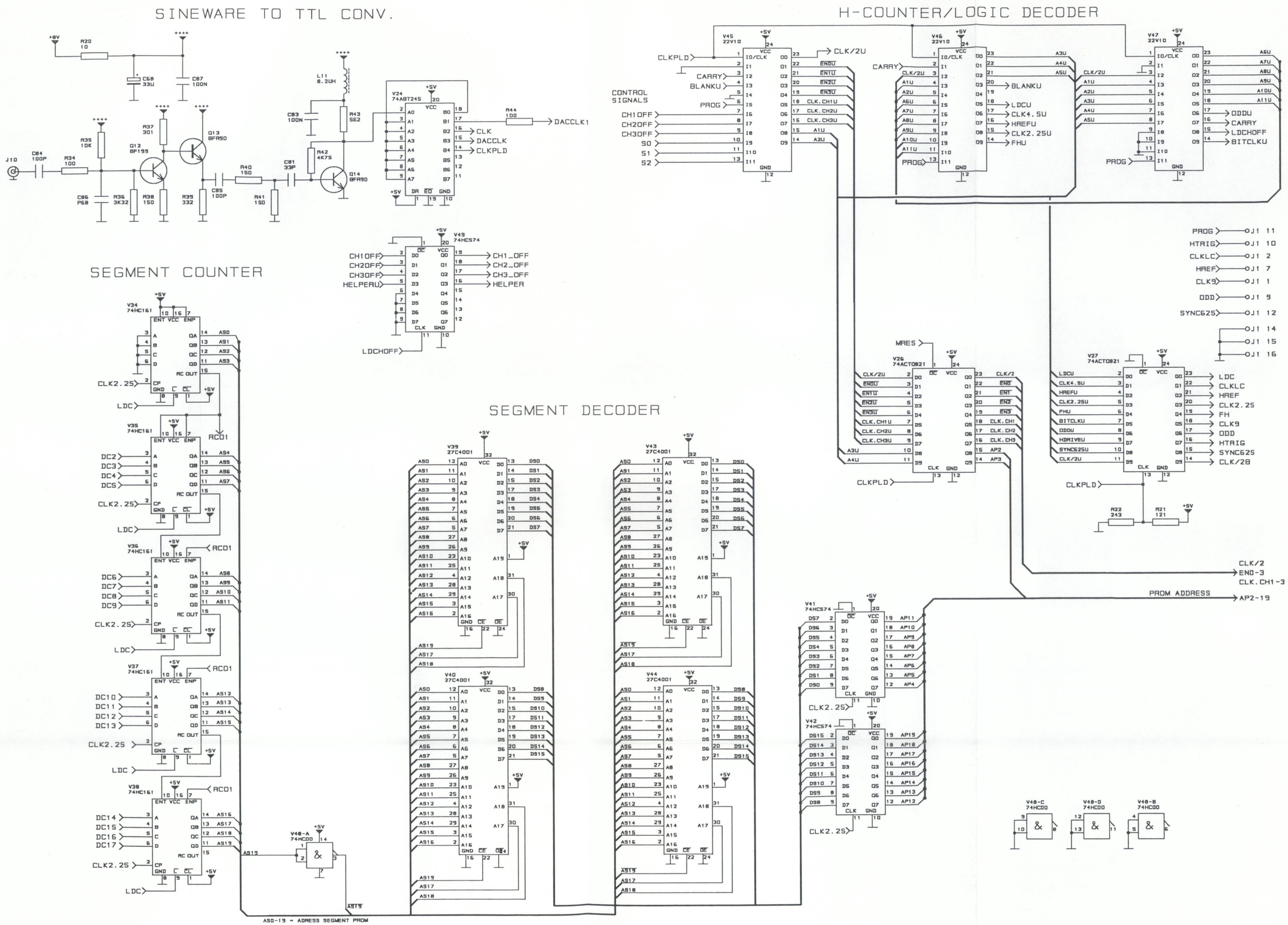

Fig. 13-11 Circuit diagram, Generator Board - Unit 2, sh.2

Digitized in Heiloo the Netherlands
Not for sale!

www.freeservicemanuals.info

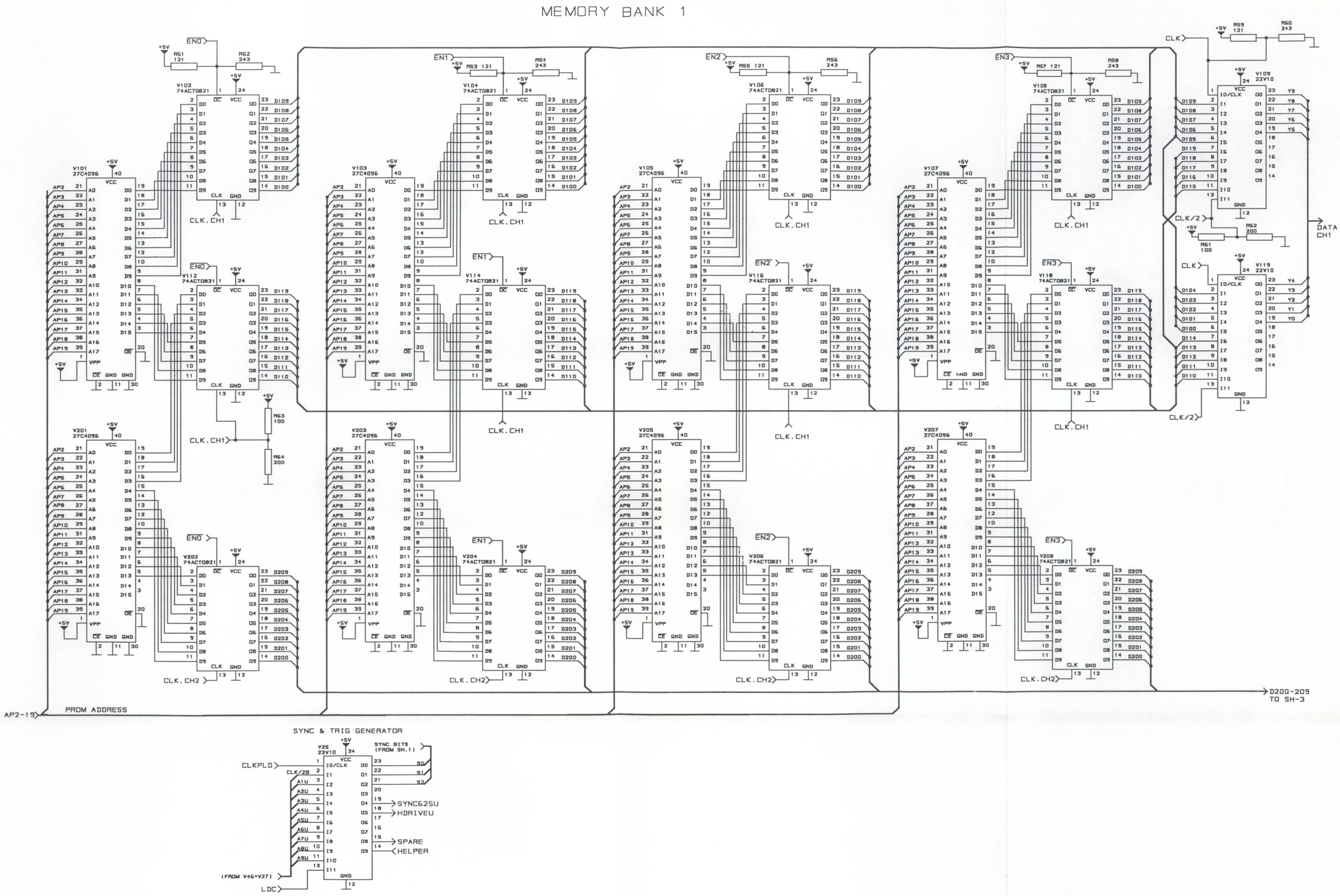

Fig. 13-12 Circuit diagram, Generator Board - Unit 2, sh.3

Digitized in Heiloo the Netherlands

Not for sale!

www.freeservicemanuals.info

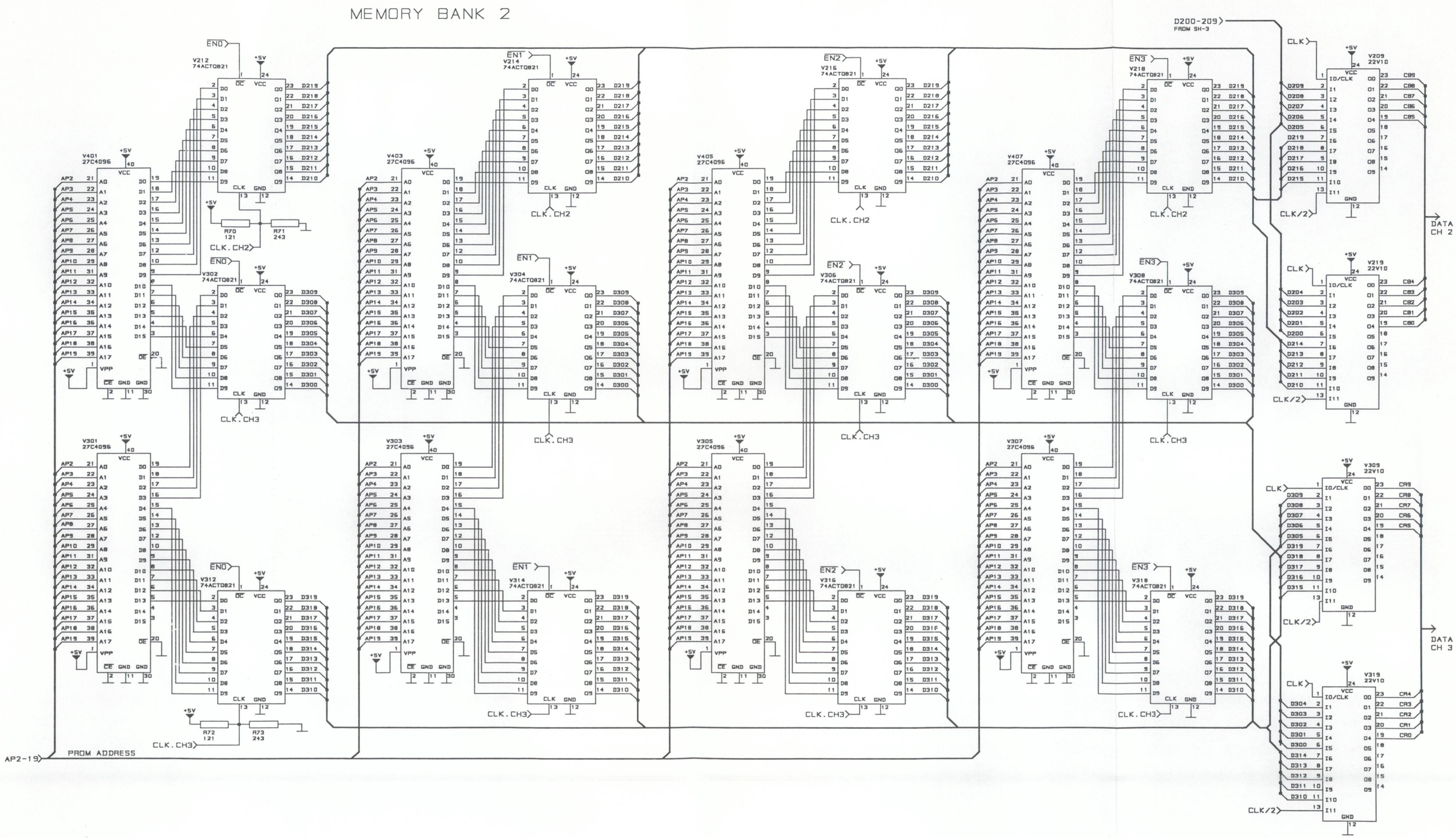

Fig. 13-13 Circuit diagram, Generator Board - Unit 2, sh.4

Digitized in Heiloo the Netherlands
Not for sale!

www.freeservicemanuals.info

1/19/2025

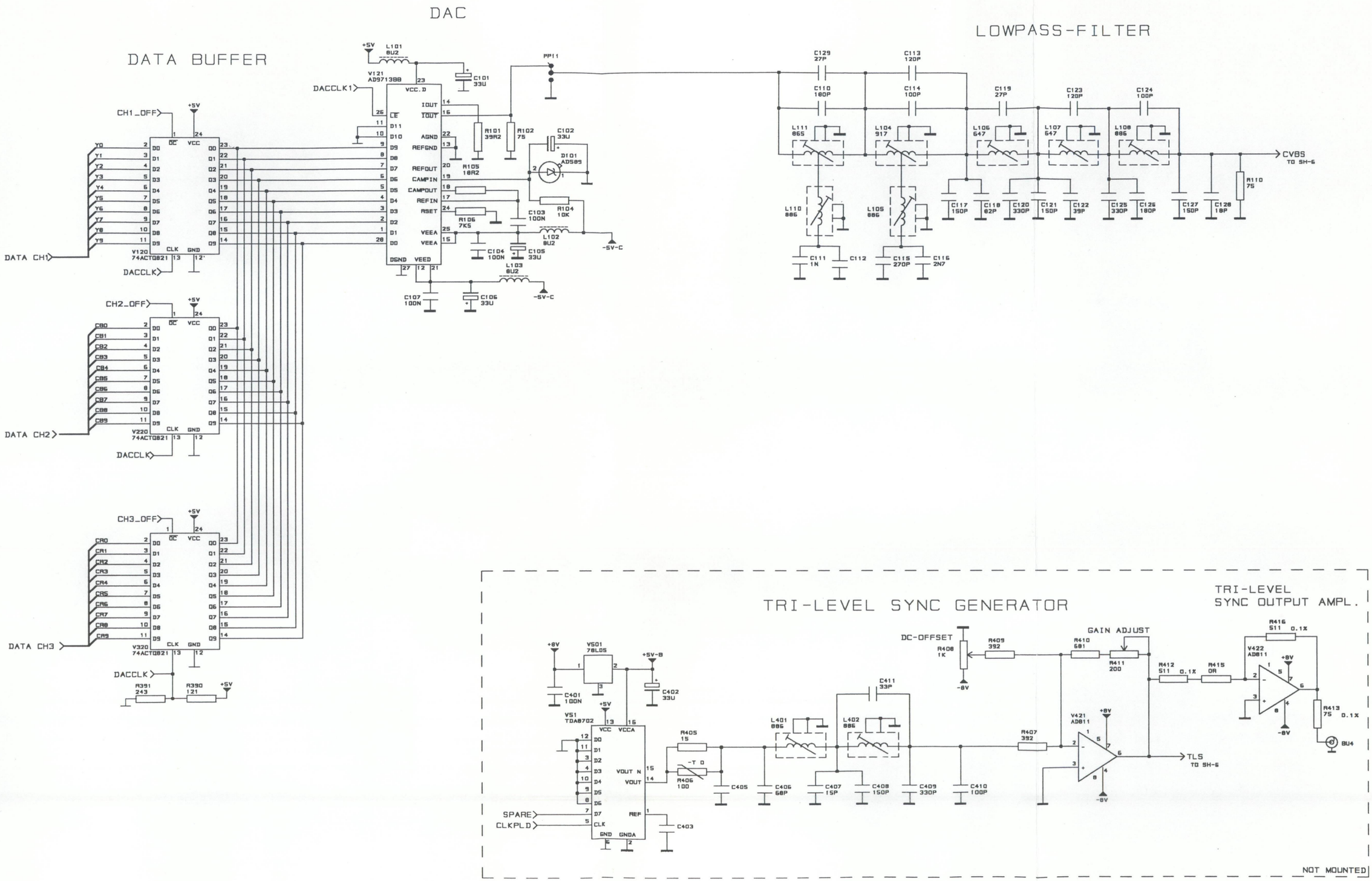

Fig. 13-14 Circuit diagram, Generator Board - Unit 2, sh.5

Digitized in Heiloo the Netherlands
Not for sale!

www.freeservicemanuals.info

1/19/2025

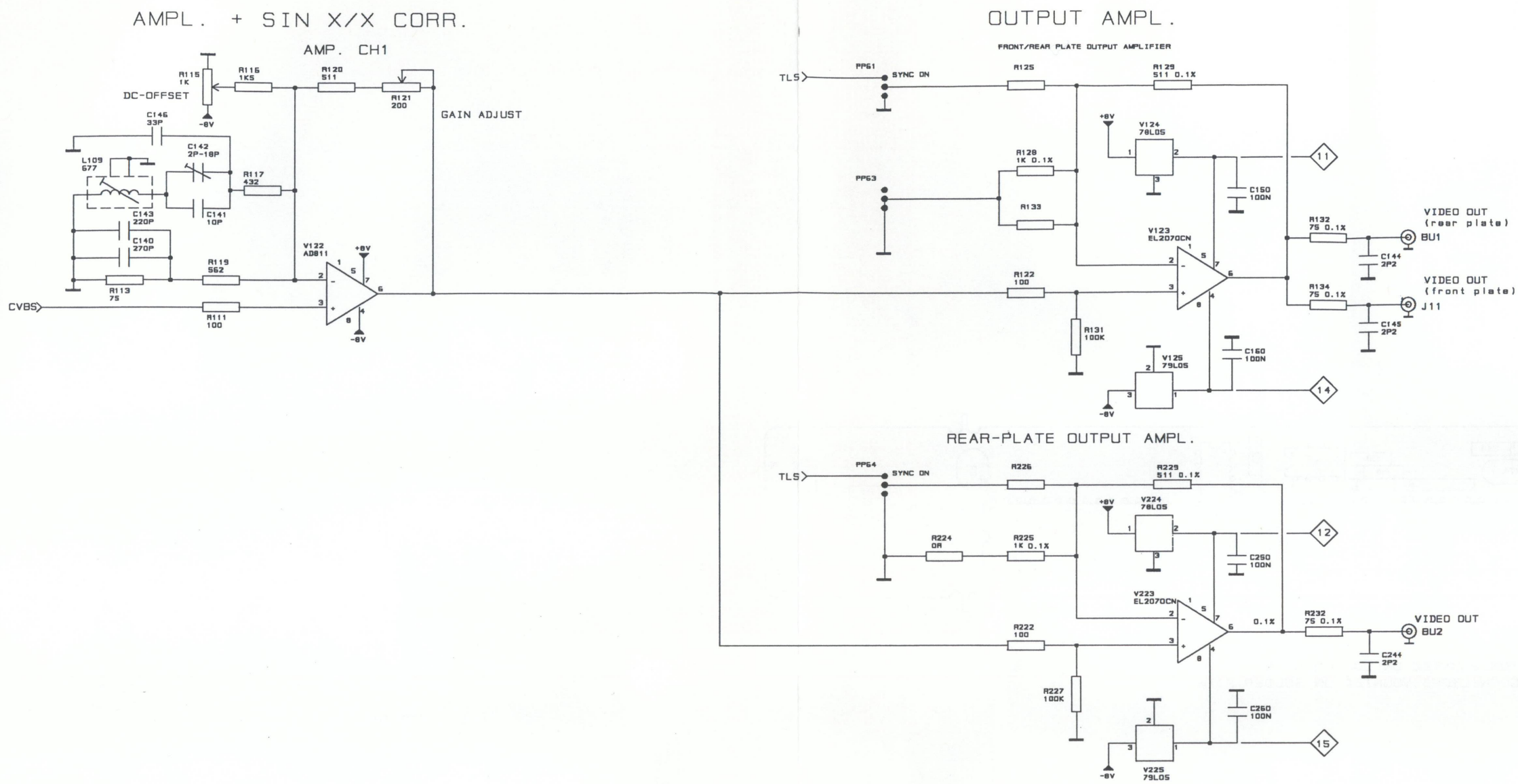

Fig. 13-15 Circuit diagram, Generator Board - Unit 2, sh.6

Digitized in Heiloo the Netherlands
Not for sale!

www.freeservicemanuals.info
1/19/2025

Digitized by www.freeservicemanuals.info 2025

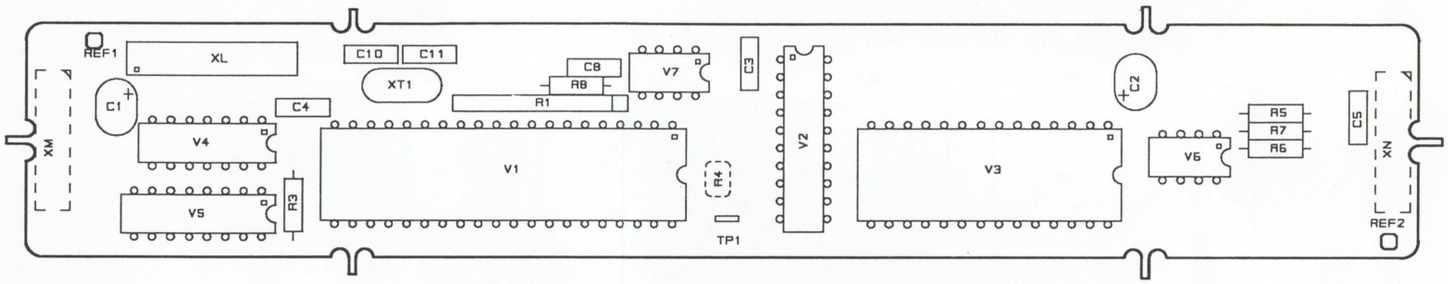

R4 RESISTOR MOUNTED ON SOLDER SIDE
XM & XN CONNECTORS MOUNTED ON SOLDER SIDE

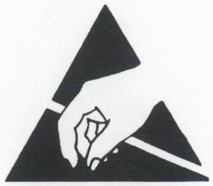

ATTENTION

Fig. 13-16 Component location, Front Plate Controller - Unit 3A

Digitized in Heiloo the Netherlands
Not for sale!

www.freeservicemanuals.info

1/19/2025

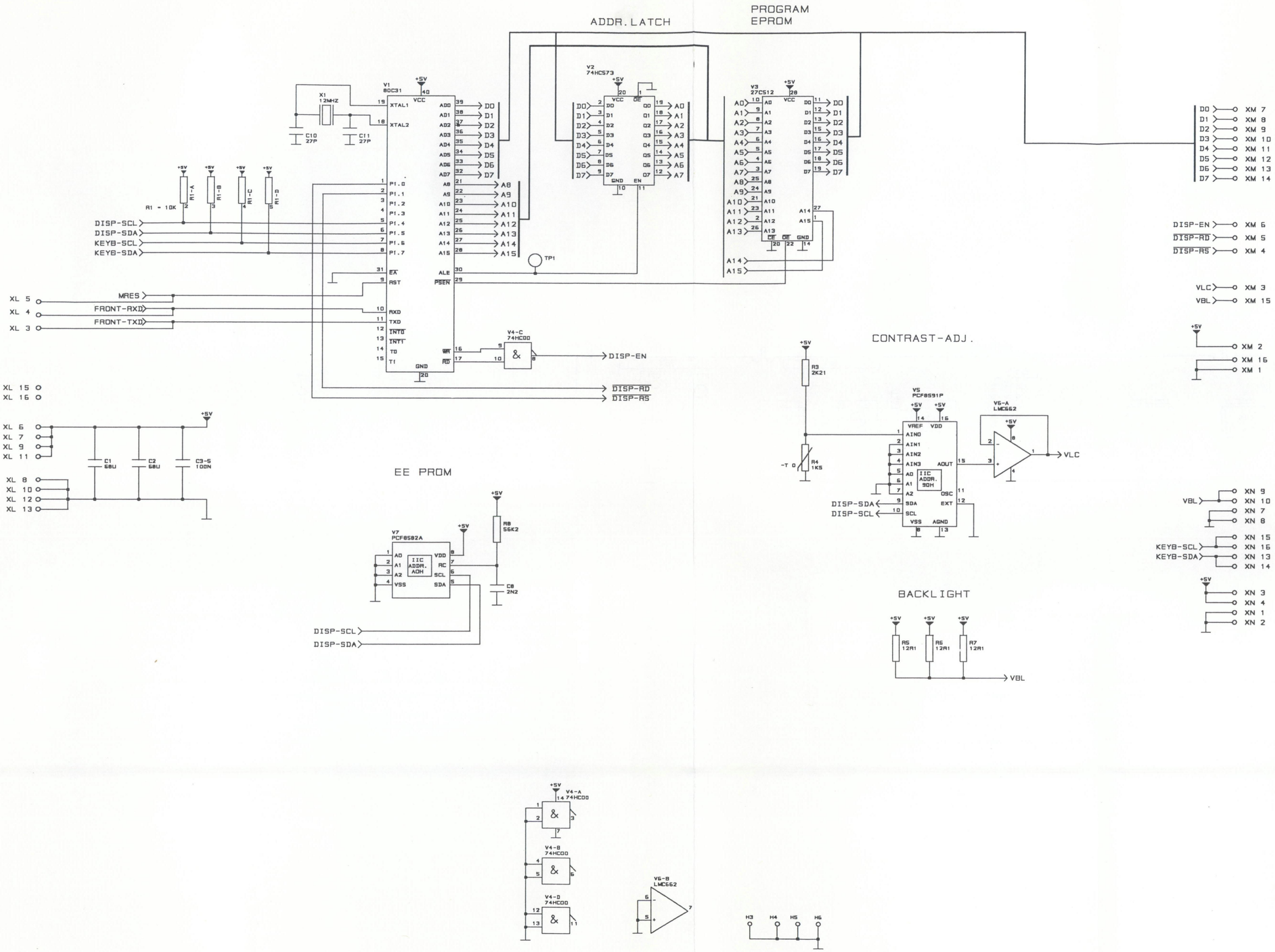

109 80990

Fig. 13-17 Circuit diagram, Front Plate Controller - Unit 3A

Digitized in Heiloo the Netherlands
Not for sale!

www.freeservicemanuals.info
1/19/2025

Digitized by www.freeservicemanuals.info 2025

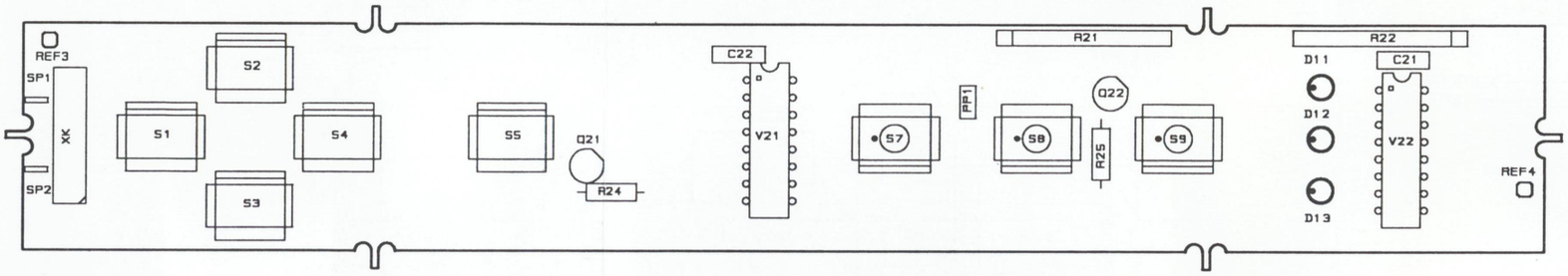

XK MOUNTED ON SOLDER SIDE

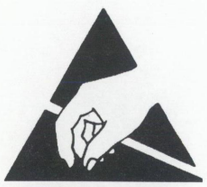

ATTENTION

Fig. 13-18 Component location, Keyboard - Unit 3B

Digitized in Heiloo the Netherlands
Not for sale!

www.freeservicemanuals.info

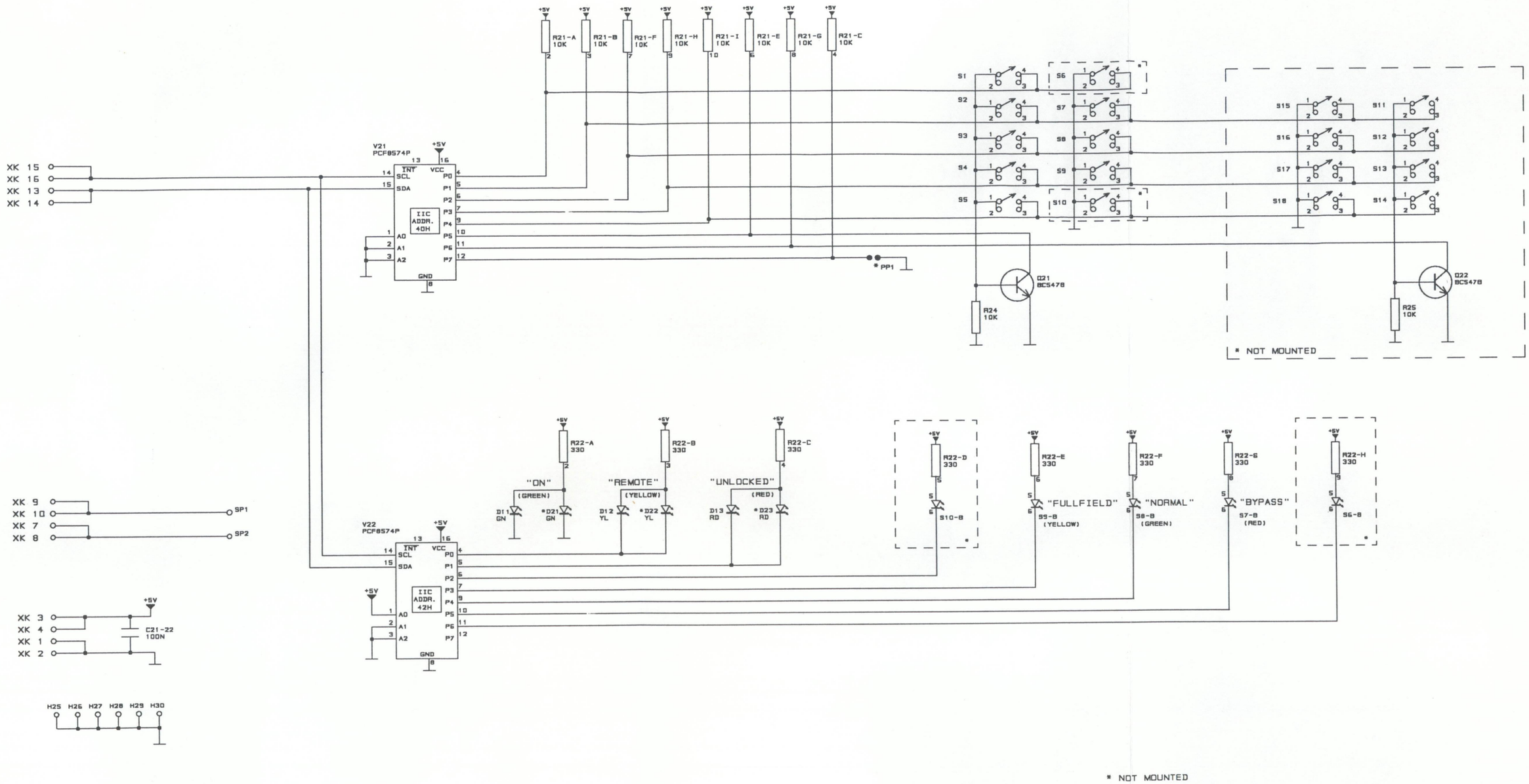

109 78200

Fig. 13-19 Circuit diagram, Keyboard - Unit 3B

Digitized in Heiloo the Netherlands
Not for sale!

www.freeservicemanuals.info

14. RS232/V24 Interface - PM 8551/20

14.1 General Information

The RS232 interface provides the interface between an external RS232/V24 bus and the instruments internal I^2C bus.

The unit is build around a single chip controller (V1), a DUART (V2), and a line driver (V3).

During output mode the controller transforms the data on I^2C bus to eight bit parallel format which can be handled by the DUART.

During input mode the controller transforms the eight bit parallel data supplied by the DUART into I^2C format.

14.2 Test and Adjustments

On this unit no adjustments are found.

Digitized in Heiloo the Netherlands
Not for sale!

www.freeservicemanuals.info 1/19/2025

Digitized by www.freeservicemanuals.info 2025

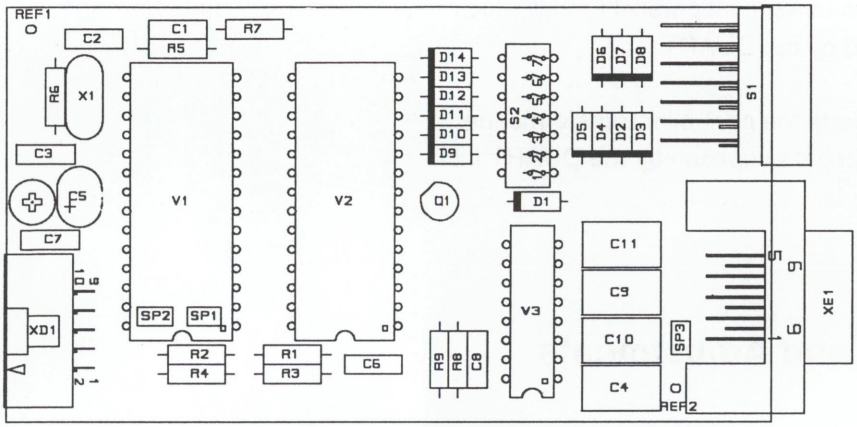

ATTENTION

Fig. 14-1 Component location, RS232 - PM 8551/20

Digitized in Heiloo the Netherlands Not for sale!

www.freeservicemanuals.info

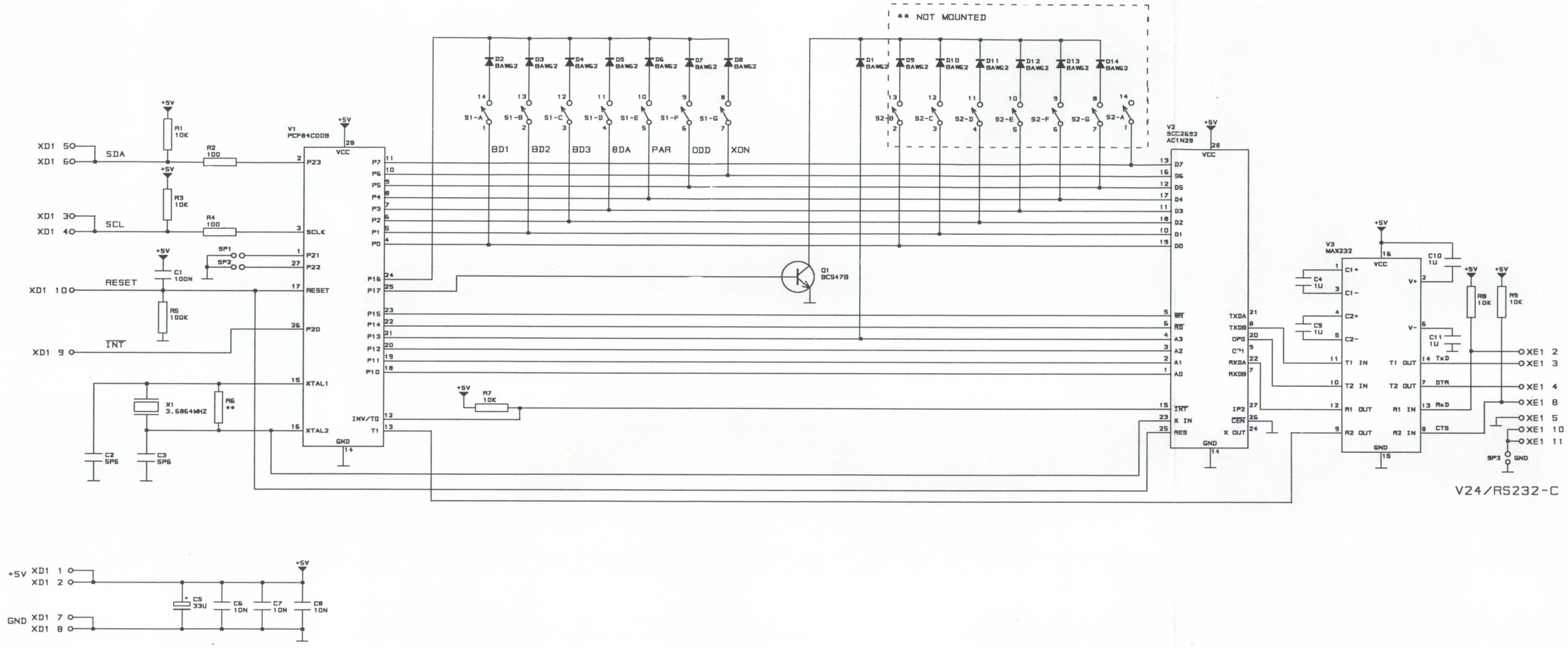

109 81140

Fig. 14-2 Circuit diagram, RS232 - PM 8551/20

Digitized in Heiloo the Netherlands
Not for sale!

www.freeservicemanuals.info

15. IEEE-488 Interface - PM 8551/30

15.1 General Information

The IEEE interface provides the interface between the IEEE bus input and the internal I^2C bus.

The main part of the unit is the CPU. This provided with a built-in 4K ROM and 128 bytes of RAM.

Port 0 (pin 4 to 11) is used as I/O-port and for reading the pre-selection switches (Address, Listen Only).

Port 1 (pin 18 to 25) is used for the IEEE control signals and to select the transmitter- or receiver function on the transceivers (V5/V6).

Pin 1 and 27 on the CPU are used for setting the I^2C bus address of the CPU.

The transceiver (V4) is used to open the connection between port 0 and the output IC (V5).

15.2 Test and Adjustments

On this unit no adjustments are found.

Digitized in Heiloo the Netherlands
Not for sale!

www.freeservicemanuals.info 1/19/2025

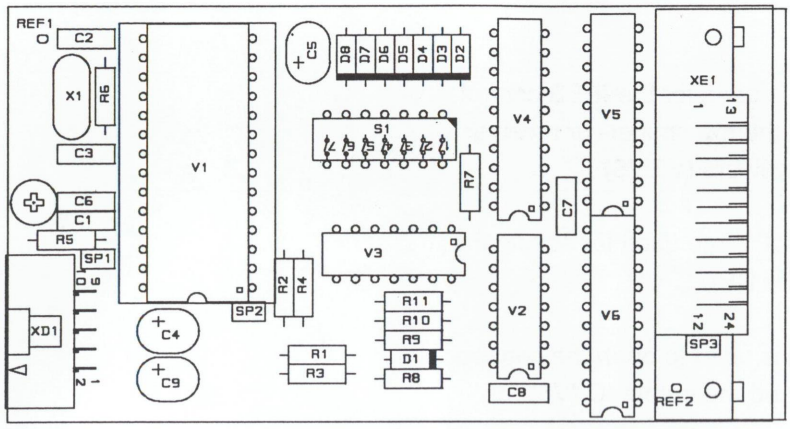

ATTENTION

Fig. 15-1 Component location, IEEE-488 - PM 8551/30

Digitized in Heiloo the Netherlands Not for sale!

www.freeservicemanuals.info

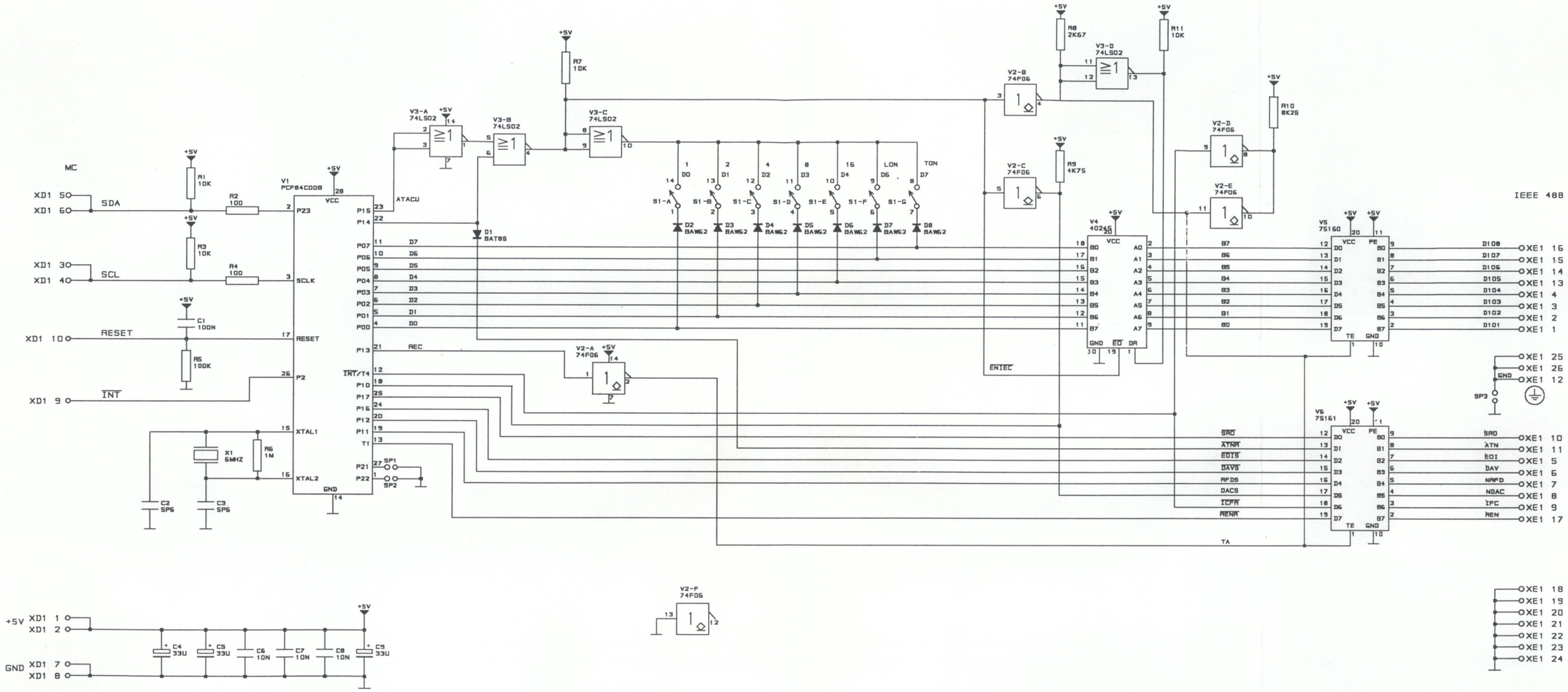

109 81100

Fig. 15-2 Circuit diagram, IEEE-488 - PM 8551/30

Digitized in Heiloo the Netherlands

Not for sale!

www.freeservicemanuals.info

16. Service Hints

16.1 Maintenance

16.1.1 Switches

Should the switches cease to function properly due to dirty contacts, they should be treated with a switch cleaner which both cleans and lubricates. After being cleaned, the switch should be operated a number of times to distribute the cleaner evenly.

16.1.2 Cabinet

The cabinet can be cleaned with a mild detergent and water. If necessary, a fine scouring detergent may be used.

16.1.3 Repairs

If you experience problems with this equipment, please contact the local Philips sales/service organization. Our service centers have a trained staff who will provide all possible support in solving your problems.

If the instrument has to be sent to the Philips service center for repair and/or alignment, the following points should be noted:

1. Attach a label to the instrument stating the address of the sender and describing the fault(s) and complaint(s) as clearly as possible.

2. Use the original shipping carton and padding materials (if still available) or pack the instrument, wrapped in a plastic bag, in a rigid box in order to avoid transport damage.

3. The box should be marked with the complete type- and serial number (KU. number) and the remark "Return-shipment for repair".

16.2 Calibration Survey

Power Supply - (Unit 1)

1. Master Oscillator frequency.
2. Subcarrier notch.
3. Input clamp level.
4. Check of the fan control circuit.
5. Check SYNC OUTput amplifier.
6. Check TRIG OUTput amplifier.

Generator Board - (Unit 2)

1. Black level.
2. Video amplitude - BU1.
3. Video amplitude - BU2.
4. Check the anti-aliasing filter (low pass filter).

Digitized in Heiloo the Netherlands
Not for sale!

www.freeservicemanuals.info

Fault analysis report

To aid us in maintaining records and in our continuing efforts to improve instrument reliability and the quality of the servicing manuals, we kindly request that you complete this fault analysis report if the instruments requires repair and/or adjustment.

Instrument type no.: PM _____ KU no. (serial no.) : _____

Estimated usage: _____ HRS/Year

Company name: _____

How many instruments of this type does your company use? _____

Please give a short description of the fault/symptoms:

_____

_____

_____

What was the cause? (Failed component, mis-adjustment etc).:

_____

_____

Time taken to repair/adjust __ HRS.

Does your company/organization normally?:

☐ Repair self ☐ Send the instrument to Philips Customer Support

When fault-finding/making adjustments, did you find the manual:

☐ Excellent? ☐ Adequate?

☐ Very good? ☐ Poor?

☐ Good? ☐ Very poor?

Do you have any suggestions that you think would improve future servicing manuals:

_____

_____

Have you any other suggestions/complains:

_____

_____

Please cut along the line and send this report to the Philips Customer Support Organization in your country.

Digitized in Heiloo the Netherlands
Not for sale!

www.freeservicemanuals.info
1/19/2025

17. List of Mechanical Parts

Item	Ordering Number	Description
1	5322 447 92366	FRONT PLATE
2	5322 410 50174	SWITCH
3	5322 410 50176	SWITCH
4	5322 410 50175	SWITCH
5	5322 130 91263	DISPLAY
6	5322 264 10271	CONNECTOR FRONT
7	5322 498 50333	HANDLE ASSY
8	5322 447 92364	TOP COVER
9	5322 264 10272	BNC CONNECTOR
10	5322 447 92365	COVER
11	5322 447 92315	COVER
12	5322 267 10004	CONNECTOR
13	5322 462 40908	COVER
14	5322 361 10726	FAN
15	5322 458 10447	METAL GUARD FOR FAN
16	5322 290 60432	MAINS CONNECTOR
17	5322 455 71099	LABEL FOR MAINS CONN
18	5322 277 11337	MAINS SWITCH
19	5322 447 92367	BOTTOM/REAR PLATE
	4822 253 50047	FUSE 0,5A
	5322 148 20029	MAINS TRANSFORMER

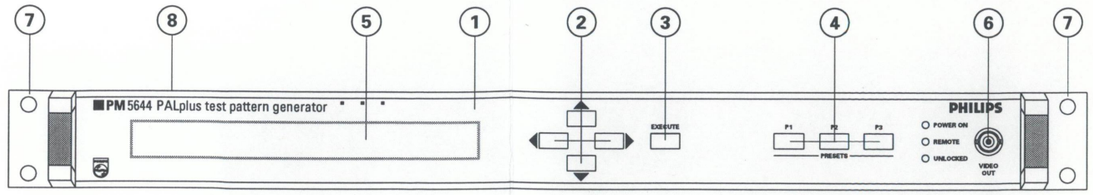

Fig. 17-1 Front of the instrument

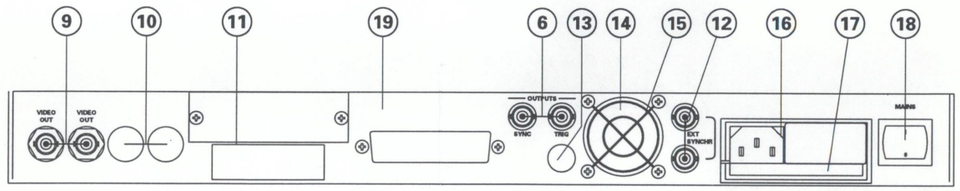

Fig. 17-2 Rear of the instrument

Digitized in Heiloo the Netherlands
Not for sale!

www.freeservicemanuals.info

18. List of Electrical Parts

Standard resistors are found on the "List of Standard Resistors" at the end of this Chapter.

Unit 1 - Power Board

Item	Ordering Number	Description
Integrated Circuits		
V1	5322 209 33682	L296
V2	5322 209 82575	74HC74N
V40	5322 209 32559	LT1070CT
V90	4822 209 80591	LM317T
V91	5322 209 81236	LM337T
V201	5322 209 85503	LM311N
V202	4822 209 61115	LF353N
V203	5322 209 10576	HEF4053BP
V204	5322 209 14441	NE521N
V205	5322 209 85503	LM311N
V206	5322 209 85503	LM311N
V207	4822 209 80525	CA3080E
V214	5322 209 52402	PROG PLD
V215	5322 209 52403	PROG PLD
V216	5322 209 52768	PROG PLD
V261	5322 209 80903	LM78L05ACZ
V263	5322 209 86434	LM79L05ACZ
V300	5322 209 86434	LM79L05ACZ
V301	5322 209 52735	PROG PROM
V302	4822 209 63496	AD7528
V303	4822 209 61115	LF353N
V304	5322 209 11342	74HC574N
V305	5322 209 52767	PROG PLD
V306	5322 209 80903	LM78L05ACZ
V307	5322 209 73013	74HC4046AN
V308	5322 209 70291	CA3130E
V309	5322 209 10576	HEF4053BP
V310	5322 209 11323	74HCU04N
V311	5322 209 11337	74HC161N
V312	4822 209 61115	LF353N
V313	5322 209 82943	LM317LZ
V314	5322 209 83228	LM337LZ
V315	4822 209 80591	LM317LZ
V320	5322 209 80903	LM78L05ACZ
V340	5322 209 80903	LM78L05ACZ
V341	5322 209 82943	LM317LZ
V351	5322 209 73013	74HC4046AN
V352	5322 209 70291	CA3130E
V401	4822 209 62476	PCB80C31BH (CMOS)
V402	5322 209 83271	74HC573N
V403	5322 209 52766	PROG PROM
V404	5322 209 11744	8464-15LL
V406	5322 209 12535	MAX693ACPE
V408	5322 209 11738	PCF8591P
V409	4822 209 80591	LM317T
Transistors		
Q11	4822 130 44568	BC557B
Q12	4822 130 44568	BC557B
Q13	5322 130 44609	2N3209
Q40	4822 130 44568	BC557B
Q201	4822 130 44237	BF450
Q202	4822 130 44154	BF199
Q203	5322 130 44418	BF256A
Q204	4822 130 44568	BC557B
Q205	5322 130 44609	2N3209
Q301	4822 130 40959	BC547B
Q351	4822 130 44237	BF450
Q352	4822 130 44154	BF199
Q353	5322 130 42119	BFR90A/02
Q410	4822 130 40959	BC547B
Diodes		
D1	5322 130 33656	BYV143-45
D2	5322 130 80285	SB360
D3	5322 130 80285	SB360
D5	5322 130 80285	SB360
D13	4822 130 30613	BAW62
D14	4822 130 81423	BZV86-C1V4
D15	4822 130 30613	BAW62
D41	5322 130 80285	SB360
D90	5322 130 30742	1N825A
D201	4822 130 30613	BAW62
D302	4822 130 30613	BAW62
D312	4822 130 30613	BAW62
D321	5322 130 30742	1N825A
D322	5322 130 30742	1N825A
D351	5322 130 31684	BB809
Coils		
L201	5322 157 51698	10UH-26UH
L351	5322 157 62578	120NH-160NH
Crystals		
XT31	4822 242 71663	12,000000MHz
XT41	4822 242 71663	12,000000MHz
	5322 242 81537	OCXO 13,5MHz
Miscelenous		
B41	5322 138 10262	LITHIUM-BATT
Capacitors		
C1	5322 121 42386	100N +-10% 63V FOIL
C2	5322 121 42386	100N +-10% 63V FOIL
C3	5322 124 80089	4700U +-20% 25V ELCO
C4	5322 121 42498	680N +-10% 63V FOIL
C5	4822 124 40196	220U +-20% 16V ELCO
C6	5322 124 80089	4700U +-20% 25V ELCO
C7	5322 121 42498	680N +-10% 63V FOIL
C8	5322 124 80089	4700U +-20% 25V ELCO
C9	5322 124 14081	6U8 +-20% 25V TANTAL
C10	5322 124 14081	6U8 +-20% 25V TANTAL
C11	4822 124 20947	3U3 +-20% 16V TANTAL

Digitized in Heiloo the Netherlands
Not for sale!

www.freeservicemanuals.info 1/19/2025

Digitized by www.freeservicemanuals.info 2025

Item	Ordering Number	Description
C12	5322 121 54071	2N2 +-1% 250V POLYS.
C13	4822 124 20947	3U3 +-20% 16V TANTAL
C14	5322 121 42489	33N +-10% 100V FOIL
C15	4822 122 31353	N33 +-2% 100V CERAM.
C16	4822 124 40196	220U +-20% 16V ELCO
C17	4822 124 40196	220U +-20% 16V ELCO
C18	5322 121 42386	100N +-10% 63V FOIL
C19	5322 121 42386	100N +-10% 63V FOIL
C20-9	5322 121 42386	100N +-10% 63V FOIL
C34-8	5322 124 24115	6U8 +-20% 10V TANTAL
C40	5322 124 40852	100U +-20% 35V ELCO
C41	4822 124 20947	3U3 +-20% 16V TANTAL
C42	5322 124 40852	100U +-20% 35V ELCO
C43	5322 124 40852	100U +-20% 35V ELCO
C44	5322 124 14081	6U8 +-20% 25V TANTAL
C87	4822 122 31237	82P +-2% 100V CERM.
C88	4822 122 31316	N10 +-2% 100V CERM.
C89	5322 124 11084	33U +-20% 10V TANTAL
C90	5322 121 42386	100N +-10% 63V FOIL
C91	5322 124 11084	33U +-20% 10V TANTAL
C92	5322 121 42386	100N +-10% 63V FOIL
C93	5322 121 42386	100N +-10% 63V FOIL
C95	5322 124 11084	33U +-20% 10V TANTAL
C96-9	5322 121 42386	100N +-10% 63V FOIL
C151	5322 124 10455	68U +-20% 6,3V TANT.
C161	5322 124 10455	68U +-20% 6,3V TANT.
C201	5322 124 10455	68U +-20% 6,3V TANT.
C203	5322 122 32261	4N7 +-10% 100V CERM.
C204	5322 124 10695	15U +-20% 16V TANTAL
C205	4822 122 31316	N10 +-2% 100V CERM.
C210	4822 122 31069	39P +-2% 100V CERM.
C211	4822 121 43526	47N +-10% 100V FOIL
C212	5322 122 32261	4N7 +-10% 100V CERM.
C250	5322 121 42386	100N +-10% 63V FOIL
C260	5322 121 42386	100N +-10% 63V FOIL
C300	5322 121 42386	100N +-10% 63V FOIL
C301	5322 122 32072	33P +-2% 100V CERM.
C302	5322 122 32072	33P +-2% 100V CERM.
C306-9	5322 121 42386	100N +-10% 63V FOIL
C310	5322 121 42489	33N +-10% 100V FOIL
C311	5322 121 42498	680N +-10% 63V FOIL
C312	4822 122 31085	N15 +-2% 100V CERM.
C313	4822 122 31316	N10 +-2% 100V CERM.
C315	5322 124 10695	15U +-20% 16V TANTAL
C316	5322 122 32261	4N7 +-10% 100V CERM.
C318	5322 121 42386	100N +-10% 63V FOIL
C319	5322 121 42386	100N +-10% 63V FOIL
C320	5322 121 42386	100N +-10% 63V FOIL
C321	5322 121 42386	100N +-10% 63V FOIL
C340-3	5322 121 42386	100N +-10% 63V FOIL
C345-6	5322 121 42386	100N +-10% 63V FOIL
C351	5322 122 32331	1N2 +-10% 100V CERM.
C352	5322 121 42386	100N +-10% 63V FOIL
C353	4822 122 31353	N33 +-2% 100V CERM.
C354	5322 121 42386	100N +-10% 63V FOIL
C355	4822 122 31085	N15 +-2% 100V CERM.
C356	4822 122 31316	N10 +-2% 100V CERM.
C357	5322 122 32261	4N7 +-10% 100V CERM.
C358	4822 122 32185	10P +-2% 100V CERM.
C359	4822 122 31052	8P2 +-P25 100V CERM.
C360	4822 122 32185	10P +-2% 100V CERM.
C361	4822 122 31348	N12 +-2% 100V CERM.
C362	4822 122 31316	N10 +-2% 100V CERM.
C363	4822 122 31215	P68 +-P25 100V CERM.
C370	5322 121 42386	100N +-10% 63V FOIL
C380	5322 124 11084	33U +-20% 10V TANTAL
C381	5322 124 11084	33U +-20% 10V TANTAL
C401	4822 122 30045	27P +-2% 100V CERM.
C402	4822 122 30045	27P +-2% 100V CERM.
C403	5322 121 42386	100N +-10% 63V FOIL
C411	5322 124 14081	6U8 +-20% 25V TANTAL
C412	5322 121 42386	100N +-10% 63V FOIL
C413	5322 121 42386	100N +-10% 63V FOIL
Resistors		
R206	4822 053 20106	10M 5% 0,25W VR25
R226	5322 101 11146	50K 10% 1,5W TRIMPOT
R311	4822 053 20185	1M8 5% 0,25W VR25
R317	5322 101 11146	50K 10% 1,5W TRIMPOT
R401	5322 111 90431	9X10K 2% NETWORK
R411	4822 116 30248	1K5 10% 0,5W NTC

Unit 2 - Generator Board

Integrated Circuits		
V2	5322 209 81236	LM337T
V9	5322 209 10883	PCF8574P
V10	5322 209 52593	DS80C320MCG
V11	5322 209 33685	74ACTQ573P
V12	5322 209 52737	PROG PROM
V13	5322 209 52594	MK48Z08B-10
V14	5322 209 52615	PROG PLD
V24	5322 209 12574	74ABT245N
V25	5322 209 52738	PROG PLD
V26	5322 209 12551	74ACTQ821
V27	5322 209 12551	74ACTQ821
V30	5322 209 11342	74HC574N
V32	5322 209 11342	74HC574N
V33	5322 209 11342	74HC574N
V34-8	5322 209 11337	74HC161N
V39	5322 209 52739	PROG PROM
V40	5322 209 52741	PROG PROM
V41	5322 209 11342	74HC574N
V42	5322 209 11342	74HC574N
V43	5322 209 52764	PROG PROM
V44	5322 209 52765	PROG PROM
V45	5322 209 52742	PROG PLD
V46	5322 209 52743	PROG PLD
V47	5322 209 52744	PROG PLD
V48	5322 209 83218	74HC00N
V49	5322 209 11342	74HC574N
V101	5322 209 52745	PROG PROM
V102	5322 209 12551	74ACTQ821
V103	5322 209 52746	PROG PROM
V104	5322 209 12551	74ACTQ821
V105	5322 209 52747	PROG PROM

Digitized in Heiloo the Netherlands Not for sale!

www.freeservicemanuals.info

Item	Ordering Number	Description
V106	5322 209 12551	74ACTQ821
V107	5322 209 52748	PROG PROM
V108	5322 209 12551	74ACTQ821
V109	5322 209 52763	PROG PLD
V112	5322 209 12551	74ACTQ821
V114	5322 209 12551	74ACTQ821
V116	5322 209 12551	74ACTQ821
V118	5322 209 12551	74ACTQ821
V119	5322 209 52763	PROG PLD
V120	5322 209 12551	74ACTQ821
V121	5322 209 12571	AD9713BAN
V122	5322 209 12569	AD811AN
V123	5322 209 12572	EL2070CN
V124	5322 209 80903	LM78L05ACZ
V125	5322 209 86434	LM79L05ACZ
V201	5322 209 52749	PROG PROM
V202	5322 209 12551	74ACTQ821
V203	5322 209 52751	PROG PROM
V204	5322 209 12551	74ACTQ821
V205	5322 209 52752	PROG PROM
V206	5322 209 12551	74ACTQ821
V207	5322 209 52753	PROG PROM
V208	5322 209 12551	74ACTQ821
V209	5322 209 52763	PROG PLD
V212	5322 209 12551	74ACTQ821
V214	5322 209 12551	74ACTQ821
V216	5322 209 12551	74ACTQ821
V218	5322 209 12551	74ACTQ821
V219	5322 209 52763	PROG PLD
V220	5322 209 12551	74ACTQ821
V223	5322 209 12572	EL2070CN
V224	5322 209 80903	LM78L05ACZ
V225	5322 209 86434	LM79L05ACZ
V301	5322 209 52754	PROG PROM
V302	5322 209 12551	74ACTQ821
V303	5322 209 52755	PROG PROM
V304	5322 209 12551	74ACTQ821
V305	5322 209 52756	PROG PROM
V306	5322 209 12551	74ACTQ821
V307	5322 209 52757	PROG PROM
V308	5322 209 12551	74ACTQ821
V309	5322 209 52763	PROG PLD
V312	5322 209 12551	74ACTQ821
V314	5322 209 12551	74ACTQ821
V316	5322 209 12551	74ACTQ821
V318	5322 209 12551	74ACTQ821
V319	5322 209 52763	PROG PLD
V320	5322 209 12551	74ACTQ821
V401	5322 209 52758	PROG PROM
V403	5322 209 52759	PROG PROM
V405	5322 209 52761	PROG PROM
V407	5322 209 52762	PROG PROM
Transistors		
Q12	4822 130 44154	BF199
Q13	5322 130 42119	BFR90A/02
Q14	5322 130 42119	BFR90A/02

Item	Ordering Number	Description
Diodes		
D101	5322 130 83435	AD589JH
Coils		
L104	5322 157 63142	2X8UH
L105	5322 157 62579	1,6UH
L106	5322 158 10654	1,5UH-5UH
L107	5322 158 10654	1,5UH-5UH
L108	5322 157 62579	1,6UH
L109	5322 157 51701	18UH-44UH
L110	5322 157 62579	1,6UH
L111	5322 157 53615	10UH
Crystal		
X2	5322 242 81954	24,000MHz
Capacitors		
C1	5322 121 42386	100N +-10% 63V FOIL
C2	5322 124 11084	33U +-20% 10V TANTAL
C3	5322 121 42386	100N +-10% 63V FOIL
C5	5322 121 42386	100N +-10% 63V FOIL
C7	5322 121 42386	100N +-10% 63V FOIL
C8	5322 121 42386	100N +-10% 63V FOIL
C11	5322 121 42386	100N +-10% 63V FOIL
C13	5322 121 42386	100N +-10% 63V FOIL
C14	5322 121 42386	100N +-10% 63V FOIL
C20	5322 121 42386	100N +-10% 63V FOIL
C21	5322 121 42386	100N +-10% 63V FOIL
C22	5322 124 11084	33U +-20% 10V TANTAL
C25	5322 121 42386	100N +-10% 63V FOIL
C26	5322 121 42386	100N +-10% 63V FOIL
C27	5322 121 42386	100N +-10% 63V FOIL
C28	5322 121 42386	100N +-10% 63V FOIL
C31	5322 124 10455	68U +-20% 6,3N TANT.
C32	5322 124 10455	68U +-20% 6,3N TANT.
C33	5322 121 42386	100N +-10% 63V FOIL
C35	5322 121 42386	100N +-10% 63V FOIL
C36	5322 121 42386	100N +-10% 63V FOIL
C37	5322 121 42386	100N +-10% 63V FOIL
C38	5322 121 42386	100N +-10% 63V FOIL
C39	5322 121 42386	100N +-10% 63V FOIL
C40-9	5322 121 42386	100N +-10% 63V FOIL
C50	5322 121 42386	100N +-10% 63V FOIL
C51	5322 121 42386	100N +-10% 63V FOIL
C54	5322 121 42386	100N +-10% 63V FOIL
C55	5322 121 42386	100N +-10% 63V FOIL
C57	5322 121 42386	100N +-10% 63V FOIL
C60	4822 122 31061	18P +-2% 100V CERM.
C61	4822 122 31061	18P +-2% 100V CERM.
C68	5322 124 11084	33U +-20% 10V TANTAL
C81	5322 122 32072	33P +-2% 100V CERM.
C83	5322 121 42386	100N +-10% 63V FOIL
C84	4822 122 31316	N10 +-2% 100V CERM.
C85	4822 122 31316	N10 +-2% 100V CERM.
C86	4822 122 31215	P68 +-P25 100V CERM.
C87	5322 121 42386	100N +-10% 63V FOIL
C101	5322 124 11084	33U +-20% 10V TANTAL
C102	5322 124 11084	33U +-20% 10V TANTAL
C103	5322 121 42386	100N +-10% 63V FOIL

Digitized in Heiloo the Netherlands
Not for sale!

www.freeservicemanuals.info 1/19/2025

Digitized by www.freeservicemanuals.info 2025

Item	Ordering Number	Description
C104	5322 121 42386	100N +-10% 63V FOIL
C105	5322 124 11084	33U +-20% 10V TANTAL
C106	5322 124 11084	33U +-20% 10V TANTAL
C107	5322 121 42386	100N +-10% 63V FOIL
C110	5322 122 31907	N18 +-2% 100V CERM.
C111	4822 121 50591	1N0 +-1% 630V POLYS.
C112	5322 122 32493	N10 +-2% 100V CERM.
C113	5322 126 10457	N12 +-2% 100V CERM.
C115	4822 122 30107	N27 +-2% 100V CERM.
C116	5322 121 54065	2N7 +-1% 160V POLYS.
C117	4822 122 31413	N15 +-2% 100V CERM.
C118	4822 122 31505	82P +-2% 100V CERM.
C119	5322 122 34063	27P +-2% 100V CERM.
C120	4822 122 31353	N33 +-2% 100V CERM.
C121	5322 126 12182	N15 +-2% 100V CERM.
C122	4822 122 31069	39P +-2% 100V CERM.
C123	5322 126 10457	N12 +-2% 100V CERM.
C124	5322 122 32493	N10 +-2% 100V CERM.
C125	4822 122 31353	N33 +-2% 100V CERM.
C126	5322 122 31907	N18 +-2% 100V CERM.
C127	4822 122 31413	N15 +-2% 100V CERM.
C128	5322 122 34064	18P +-2% 100V CERM.
C129	5322 122 34063	27P +-2% 100V CERM.
C140	4822 122 30107	N27 +-2% 100V CERM.
C141	4822 122 32185	10P +-2% 100V CERM.
C142	5322 125 50051	2,0-18PF TRIMMER
C143	5322 122 32056	N22 +-2% 100V CERM.
C144	4822 122 31036	2P2 +-2% 100V CERM.
C145	4822 122 31036	2P2 +-2% 100V CERM.
C146	4822 122 32193	33P +-2% 100V CERM.
C150	5322 121 42386	100N +-10% 63V FOIL
C160	5322 121 42386	100N +-10% 63V FOIL
C244	5322 121 42386	100N +-10% 63V FOIL
C250	5322 121 42386	100N +-10% 63V FOIL
C260	5322 121 42386	100N +-10% 63V FOIL
Resistors		
R115	5322 101 11066	1K0 10% 0,5W TRIMPOT
R121	5322 100 11864	200R 10% 0,5W TRIMP.
R128	5322 116 83627	1K00 0,1% 0,25 MPR24
R129	5322 117 10444	511R 0,1% 0,25 MPR24
R132	5322 116 53599	75R0 0,1% 0,25 MPR24
R134	5322 116 53599	75R0 0,1% 0,25 MPR24
R225	5322 116 83627	1K00 0,1% 0,25 MPR24
R226	5322 117 10444	511R 0,1% 0,25 MPR24
R229	5322 117 10444	511R 0,1% 0,25 MPR24
R232	5322 116 53599	75R0 0,1% 0,25 MPR24

Unit 3A - Controller

Item	Ordering Number	Description
Integrated Circuits		
V1	5322 209 52609	80C32
V2	5322 209 83271	74HC573N
V3	5322 209 52736	PROG PROM
V4	5322 209 83218	74HC00N
V5	5322 209 11738	PCF8591P
V6	5322 209 12576	LMC662CN
V7	5322 209 51263	PCF8582AP
Crystal		
XT1	4822 242 71663	12,000000MHz
Capacitors		
C1	5322 124 10455	68U +-20% 6,3V TANT.
C2	5322 124 10455	68U +-20% 6,3V TANT.
C3	5322 121 42386	100N +-10% 63V FOIL
C4	5322 121 42386	100N +-10% 63V FOIL
C5	5322 121 42386	100N +-10% 63V FOIL
C8	5322 122 32818	2N2 +-10% 100V CERM.
C10	4822 122 30045	27P +-2% 100V CERM.
C11	4822 122 30045	27P +-2% 100V CERM.
Resistors		
R1	5322 111 90431	9X10K 2% NETWORK
R4	4822 116 30248	1K5 10% 0,5W NTC

Unit 3B - Keyboard

Item	Ordering Number	Description
Integrated Circuits		
V21	5322 209 10883	PCF8574P
V22	5322 209 10883	PCF8574P
Transistors		
Q21	4822 130 40959	BC547B
Diodes		
D11	4822 130 32472	LED 3MM GR., TLG124
D12	5322 130 80121	LED 3MM YL., TLY124
D13	4822 130 31274	LED 3MM RED, TLR124
Miscellenous		
S1	5322 276 13433	PUSHBUTTON SWITCH
S2	5322 276 13433	PUSHBUTTON SWITCH
S3	5322 276 13433	PUSHBUTTON SWITCH
S4	5322 276 13433	PUSHBUTTON SWITCH
S5	5322 276 13433	PUSHBUTTON SWITCH
S7	5322 276 13558	PUSHBUTTON SWITCH
S8	5322 276 13561	PUSHBUTTON SWITCH
S9	5322 276 13559	PUSHBUTTON SWITCH

PM 8551/20 - RS232 Interface

Item	Ordering Number	Description
Integrated Circuits		
V1	5322 209 12632	PCF84C00B
V2	5322 209 61496	SCC2692AC1N28
V3	5322 209 60094	MAX232
Transistors		
Q1	4822 130 40959	BC547B
Diodes		
D1-8	4822 130 30613	BAW62

Digitized in Heiloo the Netherlands Not for sale!

www.freeservicemanuals.info

Item	Ordering Number	Description
Crystals		
X1	5322 242 71867	3,6864MHz
Capacitors		
C1	5322 121 42386	100N +-10% 63V FOIL
C2	5322 122 32163	5P6 +-P25 100V CERAM
C3	5322 122 32163	5P6 +-P25 100V CERAM
C4	5322 121 42114	1U0 +-5% 63V CERAMIC
C5	5322 124 11084	33U +-20% 10V ELCO
C6	4822 121 41857	10N +-10% 250V FOIL
C7	4822 121 41857	10N +-10% 250V FOIL
C8	4822 121 41857	10N +-10% 250V FOIL
C9	5322 121 42114	1U0 +-5% 63V FOIL
C10	5322 121 42114	1U0 +-5% 63V FOIL
C11	5322 121 42114	1U0 +-5% 63V FOIL

PM 8551/30 - IEEE Interface

Integrated Circuits		
V1	5322 209 12632	PCF84C00B
V2	5322 209 33673	74F06N
V3	5322 209 85407	74LS02N
V4	5322 209 10867	HEF40245BP
V5	5322 209 81807	SN75160BN-00
V6	5322 209 81842	SN75161AN-00
Diodes		
D1	4822 130 31983	BAT85
D2-8	4822 130 30613	BAW62
Crystals		
X1	4822 242 70392	6,0000MHz
Capacitors		
C1	5322 121 42386	100N +-10% 63V FOIL
C2	5322 122 32163	5P6 +-P25 100V CER.
C3	5322 122 32163	5P6 +-P25 100V CER.
C4	5322 124 11084	33U +-20% 10V ELCO
C5	5322 124 11084	33U +-20% 10V ELCO
C6	4822 121 41857	10N +-10% 250V FOIL
C7	4822 121 41857	10N +-10% 250V FOIL
C8	4822 121 41857	10N +-10% 250V FOIL

Digitized in Heiloo the Netherlands
Not for sale!

www.freeservicemanuals.info

List of Standard Resistors

MR25 = 0.4W, 1%,
METAL FILM RESISTOR

Type	Value	Ordering number
MR25	10	5322 116 50452
MR25	11	5322 116 54059
MR25	12.1	5322 116 54069
MR25	13	5322 116 54082
MR25	15	5322 116 51221
MR25	16.2	5322 116 54431
MR25	18.2	5322 116 54083
MR25	20	5322 116 51048
MR25	22.1	5322 116 50983
MR25	24.3	5322 116 54435
MR25	26.7	5322 116 54067
MR25	30.1	5322 116 50904
MR25	33.2	5322 116 50527
MR25	35.7	5322 116 54439
MR25	39.2	5322 116 54087
MR25	43.2	5322 116 50519
MR25	47.5	5322 116 50952
MR25	51.1	5322 116 54442
MR25	56.2	5322 116 54446
MR25	61.9	5322 116 54451
MR25	68.1	5322 116 54455
MR25	75	5322 116 54459
MR25	82.5	5322 116 54462
MR25	90.9	5322 116 54466
MR25	100	5322 116 55549
MR25	110	5322 116 54474
MR25	130	5322 116 54481
MR25	150	5322 116 54486
MR25	162	5322 116 50417
MR25	182	5322 116 54493
MR25	200	5322 116 54496
MR25	221	4822 116 51223
MR25	267	5322 116 54503
MR25	301	5322 116 55366
MR25	332	4822 116 51226
MR25	357	5322 116 50603
MR25	392	5322 116 54006
MR25	432	5322 116 54522
MR25	475	5322 116 54007
MR25	511	4822 116 51282
MR25	562	4822 116 51231
MR25	619	4822 116 51232
MR25	681	4822 116 51233
MR25	750	4822 116 51234
MR25	825	5322 116 54541
MR25	909	5322 116 55278
MR25	1K	4822 116 51235
MR25	1.10K	4822 116 51236
MR25	1.21K	5322 116 54557
MR25	1.30K	5322 116 50526
MR25	1.50K	4822 116 51239
MR25	1.62K	5322 116 55359
MR25	1.82K	5322 116 54568
MR25	2K	5322 116 54572
MR25	2.21K	4822 116 51245
MR25	2.43K	5322 116 54004
MR25	2.67K	5322 116 54578
MR25	3.01K	4822 116 51246
MR25	3.32K	5322 116 54005
MR25	3.57K	5322 116 54586
MR25	3.92K	5322 116 54591
MR25	4.32K	5322 116 54594
MR25	4.75K	5322 116 54008
MR25	5.11K	5322 116 54595
MR25	5.62K	4822 116 51281
MR25	6.19K	5322 116 55426
MR25	6.81K	4822 116 51252
MR25	7.50K	5322 116 54608
MR25	8.25K	5322 116 54558
MR25	9.09K	4822 116 51284

Type	Value	Ordering number
MR25	10K	4822 116 51253
MR25	11K	5322 116 54623
MR25	12.1K	5322 116 50572
MR25	13K	5322 116 50522
MR25	15K	4822 116 51255
MR25	16.2K	5322 116 55361
MR25	18.2K	5322 116 54638
MR25	20K	5322 116 54642
MR25	22.1K	4822 116 51257
MR25	24.3K	5322 116 54647
MR25	26.7K	5322 116 54652
MR25	30.1K	5322 116 54655
MR25	33.2K	4822 116 51259
MR25	35.7K	5322 116 54662
MR25	39.2K	4822 116 51262
MR25	43.2K	5322 116 54667
MR25	47.5K	5322 116 54671
MR25	51.1K	5322 116 50672
MR25	56.2K	4822 116 51264
MR25	61.9K	5322 116 50872
MR25	68.1K	4822 116 51266
MR25	75K	4822 116 51267
MR25	82.5K	5322 116 55374
MR25	90.9K	5322 116 54694
MR25	100K	4822 116 51268
MR25	110K	5322 116 54701
MR25	121K	5322 116 54704
MR25	130K	5322 116 54707
MR25	150K	4822 116 51269
MR25	162K	5322 116 54716
MR25	182K	5322 116 54722
MR25	200K	4822 116 51286
MR25	221K	4822 116 51272
MR25	243K	5322 116 54733
MR25	267K	4822 116 54737
MR25	301K	5322 116 54743
MR25	332K	4822 116 51184
MR25	357K	5322 116 51767
MR25	392K	5322 116 51768
MR25	432K	5322 116 51769
MR25	475K	4822 116 51275
MR25	511K	5322 116 55258
MR25	562K	4822 116 51169
MR25	619K	5322 116 55315
MR25	681K	5322 116 55284
MR25	750K	5322 116 55532
MR25	825K	5322 116 51398
MR25	909K	5322 116 55533
MR25	1M	5322 116 55535

SMD resistors

Type 0805 = 1W, 0.5%,
CHIP

Type	Value	Ordering number
0805	2R2	4822 116 90466
0805	2R7	5322 116 82067
0805	3R3	4822 116 90469
0805	3R9	4822 116 82062
0805	4R7	4822 116 90462
0805	5R6	5322 116 82068
0805	6R8	5322 116 82069
0805	8R2	5322 116 82071
0805	10R	4822 116 90457
0805	12R	5322 116 82066
0805	15R	4822 116 81118
0805	18R	5322 116 81929
0805	22R	4822 116 90467
0805	27R	4822 116 90468
0805	33R	4822 116 90471
0805	39R	4822 111 91653
0805	47R	4822 111 91652
0805	56R	4822 116 90451
0805	68R	4822 116 80887
0805	82R	4822 111 91507
0805	100R	4822 116 90441
0805	120R	4822 116 81026
0805	150R	4822 116 80879
0805	180R	4822 116 90438
0805	220R	4822 116 90339
0805	270R	4822 116 80882
0805	330R	4822 111 91501
0805	390R	4822 116 81029
0805	470R	4822 116 90446
0805	560R	4822 111 91533
0805	680R	4822 116 90463
0805	820R	4822 116 81034
0805	1K0	4822 111 91516
0805	1K2	4822 116 80877
0805	1K5	4822 116 90458
0805	1K8	4822 116 81383
0805	2K2	4822 111 91522
0805	2K7	4822 111 91449
0805	3K3	4822 111 91526
0805	3K9	4822 111 91527
0805	4K7	4822 111 91532
0805	5K6	4822 111 91534
0805	6K8	4822 116 90464
0805	8K2	4822 111 91655
0805	10K	4822 111 91517
0805	12K	4822 116 81382
0805	15K	4822 111 91498
0805	18K	4822 111 91521
0805	22K	4822 111 91523
0805	27K	4822 116 90342
0805	33K	4822 116 81017
0805	39K	4822 116 90445
0805	47K	4822 111 91661
0805	56K	4822 111 91535
0805	68K	4822 116 90347
0805	82K	4822 116 81389
0805	100K	4822 111 91518
0805	120K	4822 116 90442
0805	150K	4822 116 90459
0805	180K	4822 116 90443
0805	220K	4822 116 80881
0805	270K	4822 116 81028
0805	330K	4822 116 90345
0805	390K	4822 111 91529
0805	470K	4822 116 90447
0805	560K	4822 116 80925
0805	680K	4822 116 81032
0805	820K	4822 116 90348

Digitized in Heiloo the Netherlands

Not for sale!

www.freeservicemanuals.info

19. List of Recommended Spares Parts

Please observe that the recommended spare parts are split into "basic" and "supplement" packages.

The "basic" package contains the components common to all versions of PM 5644/85.

A "supplement" package contains the additional components needed to support a specific version of PM 5644/85.

The packages are to be ordered at your National Philips Sales Organization (we recommend that you purchase 1 package per 10 instruments in service).

Type	Ordering number
Basic kit	4008 118 86200

Basic kit

Quantity	Ordering number	Description
3	4822 253 50047	FUSE 0,5A
3	4822 253 50046	FUSE 1A
1	5322 148 20029	MAINS TRANSFORMER
1	5322 361 10726	FAN
1	5322 458 10447	METAL GUARD FOR FAN
1	5322 290 60432	MAINS CONNECTOR
1	5322 277 11337	MAINS SWITCH
1	5322 410 50174	SWITCH
1	5322 410 50176	SWITCH
1	5322 410 50175	SWITCH
2	5322 276 13433	PUSHBUTTON SWITCH
1	5322 276 13558	PUSHBUTTON SWITCH
1	5322 276 13561	PUSHBUTTON SWITCH
1	5322 276 13559	PUSHBUTTON SWITCH
1	5322 130 91263	DISPLAY
1	5322 138 10262	LITHIUM-BATT
3	5322 124 80089	4700U +-20% 25V ELCO
1	4822 124 40196	220U +-20% 16V ELCO
1	5322 124 40852	100U +-20% 35V ELCO
2	5322 124 10455	68U +-20% 6,3V TANTAL
3	5322 124 11084	33U +-20% 10V TANTAL
1	5322 124 10695	15U +-20% 16V TANTAL
2	5322 124 14081	6U8 +-20% 25V TANTAL

Digitized in Heiloo the Netherlands
Not for sale!

www.freeservicemanuals.info 1/19/2025

Quantity	Ordering number	Description
1	4822 124 20947	3U3 +-20% 16V TANTAL
1	5322 209 12574	74ABT245N
1	5322 209 33685	74ACTQ573P
4	5322 209 12551	74ACTQ821
1	5322 209 83218	74HC00N
1	5322 209 11337	74HC161N
1	5322 209 73013	74HC4046AN
1	5322 209 83271	74HC573N
2	5322 209 11342	74HC574N
1	5322 209 82575	74HC74N
1	5322 209 11323	74HCU04N
1	5322 209 52609	80C32
1	5322 209 11744	8464-15LL
1	4822 209 63496	AD7528
1	5322 209 12569	AD811AN
1	5322 209 12571	AD9713BAN
1	4822 209 80525	CA3080E
1	5322 209 70291	CA3130E
1	5322 209 52593	DS80C320MCG
1	5322 209 12572	EL2070CN
1	5322 209 10576	HEF4053BP
1	5322 209 33682	L296
1	4822 209 61115	LF353N
1	5322 209 85503	LM311N
1	5322 209 82943	LM317LZ
1	4822 209 80591	LM317T
1	5322 209 83228	LM337LZ
1	5322 209 81236	LM337T
2	5322 209 80903	LM78L05ACZ
2	5322 209 86434	LM79L05ACZ
1	5322 209 12576	LMC662CN
1	5322 209 32559	LT1070CT
1	5322 209 12535	MAX693ACPE
1	5322 209 52594	MK48Z08B-10
1	5322 209 14441	NE521N
1	4822 209 62476	PCB80C31BH
1	5322 209 10883	PCF8574P
1	5322 209 51263	PCF8582AP
1	5322 209 11738	PCF8591P
1	5322 130 44609	2N3209
1	4822 130 40959	BC547B
2	4822 130 44568	BC557B
1	4822 130 44154	BF199
1	5322 130 44418	BF256A
1	4822 130 44237	BF450
1	5322 130 42119	BFR90A/02
1	5322 130 30742	1N825A

Digitized in Heiloo the Netherlands Not for sale!

www.freeservicemanuals.info

Quantity	Ordering number	Description
1	5322 130 83435	AD589JH
2	4822 130 30613	BAW62
1	5322 130 31684	BB809
1	5322 130 33656	BYV143-45
1	4822 130 81423	BZV86-C1V4
1	4822 130 31274	LED 3MM RED, TLR124
1	5322 130 80121	LED 3MM YL., TLY124
1	4822 130 32472	LED 3MM GR., TLG124
4	5322 130 80285	SB360
1	5322 242 81954	24,000MHz
1	4822 242 71663	12,000000MHz
1	5322 242 81537	OCXO 13,5MHz

Digitized in Heiloo the Netherlands Not for sale!

www.freeservicemanuals.info 1/19/2025

APPENDICES

Digitized in Heiloo the Netherlands Not for sale!

www.freeservicemanuals.info 1/19/2025

Appendix A - Tables

A.1 Test Signals and Test Patterns

Signal name:	Description:	IEEE-488 RS232 Pattern no.:
PHILIPS Camera	PALplus 16:9 in camera mode	1
PHILIPS Camera, Text	PALplus 16:9 in camera mode, with identification text	2
PHILIPS Film	PALplus 16:9 in film mode	3
PHILIPS Film, Text	PALplus 16:9 in film mode, with identification text	4
Helper Timing Test	PALplus signal for evaluation of delay between letterbox and helper signal	5
Helper Ampl. Test	PALplus signal for evaluation of the helper amplitude/frequency response	6
Motion Detect. Test	PALplus signal for evaluation of the Motion Adaptive Colour Plus function	7
Zoneplate, Circ.	PALplus modulated zoneplate signal	8
PHILIPS 4:3	Standard PAL test pattern	9
PHILIPS 4:3, Text	Standard PAL test pattern, with identification text	10
Linesweep, 5MHz	PAL signal for test of PALplus compliance of transmitters *	11
Modulated Staircases	PAL signal for test of PALplus compliance of transmitters **	12
PLUGE, 2%, 4 levels	Standard PAL signal for for setting of contrast and brightness	13
PHILIPS 14:9	Cropped 4:3 signal, standard PAL modulated	14

* : 300 mV_{PP} signal, symmetrical around black.

** : 3 modulated staircases, symmmetrical around back.

A.2 Error Codes During Power Up Sequence

Error Message in Display	Error Cause
E(01) Memory/Back-up error	Generator memory back-up not valid
E(02) Communication error	Generator µP not responding
E(04) Communication error	Sync µP not responding
E(08) Communication error	Master memory back-up not valid
E(10) Communication error	Master µP, local IIC communication failed
E(20) Communication error	Front plate memory back-up not valid
E(40) Communication error	Front plate, local IIC communication failed
E(80) Communication error	Seriel communication between front plate and master-µP crashed.

Digitized in Heiloo the Netherlands Not for sale!

www.freeservicemanuals.info 1/19/2025

Digitized by www.freeservicemanuals.info 2025

A.3 WSS Codes

Description	Aspect Ratio				Enhanced Services				Subtitles			Reserved		
	Bit 0 Ascept Ratio	**Bit 1** Aspect Ratio	**Bit 2** Aspect Ratio	**Bit 3** Odd Parity	**Bit 4** Camera = '0' / Film mode = '1'	**Bit 5** Std. PAL = '0' / MACP = '1'	**Bit 6** No Helper = '0' / Helper = '1'	**Bit 7** Reserved, fixed to '0'	**Bit 8** No SbT = '0' / SbT = '1'	**Bit 9** Open Subtitles	**Bit 10** Open Subtitles	**Bit 11** Reserved, fixed to '0'	**Bit 12** Reserved, fixed to '0'	**Bit 13** Reserved, fixed to '0'
Full format 4:3	0	0	0	1	x	x	0	0	x	0	0	0	0	0
Letterbox 14:9 center	1	0	0	0	x	0	0	0	0	0	0	0	0	0
Letterbox 14:9 top	0	1	0	0	0	0	0	0	0	0	0	0	0	0
Letterbox 16:9 center	1	1	0	1	x	x	x	0	x	0	0	0	0	0
Letterbox 16:9 top	0	0	1	0	0	0	0	0	0	0	0	0	0	0
Letterbox >16:9 center	1	0	1	1	0	0	0	0	0	0	0	0	0	0
Full format 4:3, shoot and protect 14:9 center	0	1	1	1	0	0	0	0	0	0	0	0	0	0
Full format 16:9	1	1	1	0	0	0	0	0	0	0	0	0	0	0
Code violation of bit 3:														
Full format 4:3	0	0	0	0	0	0	0	0	0	0	0	0	0	0
Letterbox 14:9 top	0	1	0	1	0	0	0	0	0	0	0	0	0	0

Note: **x** bit can be programmed to 0 or 1

MACP = Motion Adaptive Colour Plus

SbT = Subtitling by Teletext

Digitized in Heiloo the Netherlands Not for sale!

www.freeservicemanuals.info 1/19/2025

SERVICE INFORMATION

Digitized in Heiloo the Netherlands Not for sale!

www.freeservicemanuals.info 1/19/2025

SUPPLEMENT

Date: 95-11-21 **PTV302**

PALplus Test Pattern Generator
PM 5644

SUPPLEMENT TO: **PM 5644/85** REFERENCE MANUAL: **9499 493 09711**

This supplement updates your Instruction Manual to newest version of the instrument.

Please replace pages 3-3/3-4, and 3-5/3-6, and A-1/A-2 with pages enclosed the supplement.

Please correct the List of Electrical Parts (Chapter 18) accordingly.

Item	Ordering Number	Description
Unit 1 - Power Board		
V403	5322 209 12873	PROG. PROM
Unit 2 - Generator Board		
V12	5322 209 12874	PROG. PROM
V39	5322 209 12878	PROG. PROM
V40	5322 209 12879	PROG. PROM
V43	5322 209 12881	PROG. PROM
V44	5322 209 12882	PROG. PROM
V47	5322 209 12872	PROG. PLD
V101	5322 209 12883	PROG. PROM
V103	5322 209 12884	PROG. PROM
V105	5322 209 12885	PROG. PROM
V107	5322 209 12886	PROG. PROM
V201	5322 209 12887	PROG. PROM
V203	5322 209 12888	PROG. PROM
V205	5322 209 12889	PROG. PROM
V207	5322 209 12891	PROG. PROM
V301	5322 209 12892	PROG. PROM
V303	5322 209 12893	PROG. PROM
V305	5322 209 12894	PROG. PROM
V307	5322 209 12895	PROG. PROM

Item	Ordering Number	Description
V401	5322 209 12896	PROG. PROM
V403	5322 209 12898	PROG. PROM
V405	5322 209 12899	PROG. PROM
V407	5322 209 12901	PROG. PROM
Unit 3A - Front Plate Controller		
V3	5322 209 12875	PROG. PROM

Printed in Denmark

Publication number: 9499 498 38811

Philips
TV Test
Equipment

PHILIPS

Digitized in Heiloo the Netherlands Not for sale!

www.freeservicemanuals.info 1/19/2025

3.0.1 Menu Selections

- Selection of main type of signal
- Modifications to the PALplus signal:
  - Helper On/Off
  - Letterbox On/Off
  - PALplus references On/Off (lines 23b and 623a)
- Modifications to the PAL signals
  - Setting half line to black (line 23b and 623a)
- Selection of WSS-codes for line 23a
- Control of Ghost Reference signal in line 318
- Control of CCIR VITS signals in lines 17, 18, 330, and 331
- Control of embedded Teletext signal in line 15+328
- Genlock function On/Off

3.1 Wide Screen Signalling

The Wide Screen Signalling bits are normally fixed, and according to standards and follows the selected pattern/signal. This default setting can be changed according to the table below:

Aspect Ratio	b0	b1	b2	b3	Programmable bits (0/1)	Fixed bits
Full format 4:3	0	0	0	1	b4: Camera/Film mode b5: Std PAL/MACP b8: No SbT/SbT	b6, b7, b9, b10, b12, and b13=0 b11=1
Letterbox 14:9 centre	1	0	0	0	b4: Camera/Film mode	b5, b6, b7, b8, b9, b10, and b12, b13= 0 b11=1
Letterbox 14:9 top	0	1	0	0	None	b4, b5, b6, b7, b8, b9, b10, b12, and b13=0 b11=1
Lettebox 16:9 centre	1	1	0	1	b4: Camera/Film mode b5: Std PAL/MACP b6: No Helper/Mod. Helper b8: No SbT/SbT	b7, b9, b10, b12, and b13=0 b11=1
Letterbox 16:9 top	0	0	1	0	None	b4, b5, b6, b7, b8, b9, b10, b12, and b13=0 b11=1
Letterbox >16:9 centre	1	0	1	1	None	b4, b5, b6, b7, b8, b9, b10, b12, and b13=0 b11=1
Full format 4:3; shoot and protect 14:9 centre	0	1	1	1	None	b4, b5, b6, b7, b8, b9, b10, b12, and b13= 0 b11=1
Full format 16:9	1	1	1	0	None	b4, b5, b6, b7, b8, b9, b10, b12, and b13=0 b11=1
Code violation of b3 (Full format 4:3)	0	0	0	0	None	b4, b5, b6, b7, b8, b9, b10, b11, b12, and b13=0
Code violation of b3 (Letterbox 14:9 top)	0	1	0	1	None	b4, b5, b6, b7, b8, b9, b10, b11, b12, and b13=0

MACP: Motion Adaptive Colour Plus
SbT : Subtitling by Teletext

Digitized in Heiloo the Netherlands Not for sale!

www.freeservicemanuals.info 1/19/2025

Digitized by www.freeservicemanuals.info 2025

3.2 Signal Specification

3.2.1 Pattern Composition, PHILIPS Pattern, 16:9 and 4:3

3.2.1.1 Signals inside the circle

From top to bottom for 16:9 pattern:

Black rectangle on white background.

Black/white and white/black transition with needle pulse in the white part.
Width of pulse:
200 ns ±5 %

250 kHz squarewave signal.
Amplitude:
75 % of white

Colour bar (without white and black).
EBU (100/0/75/0).

Centre cross.
Width of vertical lines:
200 ns ±5 %
Structure of the horizontal line:
2 lines, one per field, sequence reversed compared to the lines of the background cross-hatch.

Multiburst.
Frequencies:
0.8, 1.8, 2.8, 3.8, and 4.8 MHz
Amplitude:
100 % of white level

5-riser staircase.

White/black and black/white transitions with needle pulse (bottom text field).
Width of pulse:
200 ns ±5%

Colour steps.
Yellow/red/yellow.

Circle.
Diameter:
88 % of active picture height.

For pattern with system indentification, additionally:
In bottom text field, "PALplus 16:9"

For 4:3 pattern as above, except:
Width of needle pulses and centre cross:
225 ns ±5%

For pattern with system indentification, additionally:
In bottom text field, "PAL 4:3"

3.2.1.2 Colour signals outside the circle

The signals are described as vectors, chrominance amplitude approx. 330 mV.

From left to right:

2 vertical bars with R-Y signals (270° and 90°) and B-Y = 0.

2 rectangles with signal G-Y = 0 (326° and 146°).

and to the right of the circle:

2 rectangles with signal G-Y = 0 (326° and 146°).

2 vertical bars with B-Y signals (0° and 180°) and R-Y = 0.

For 4:3 and 14:9 additionally:
Vertical bar with non-alternating R-Y signals (270°/270°) and B-Y = 0 ("Anti-PAL").
The signals are at some points starting at the extreme left of the picture for burst gate check.

Vertical bar with line-alternating B-Y signals (0°/180°) and R-Y = 0 ("Anti-PAL").

Digitized in Heiloo the Netherlands Not for sale!

www.freeservicemanuals.info

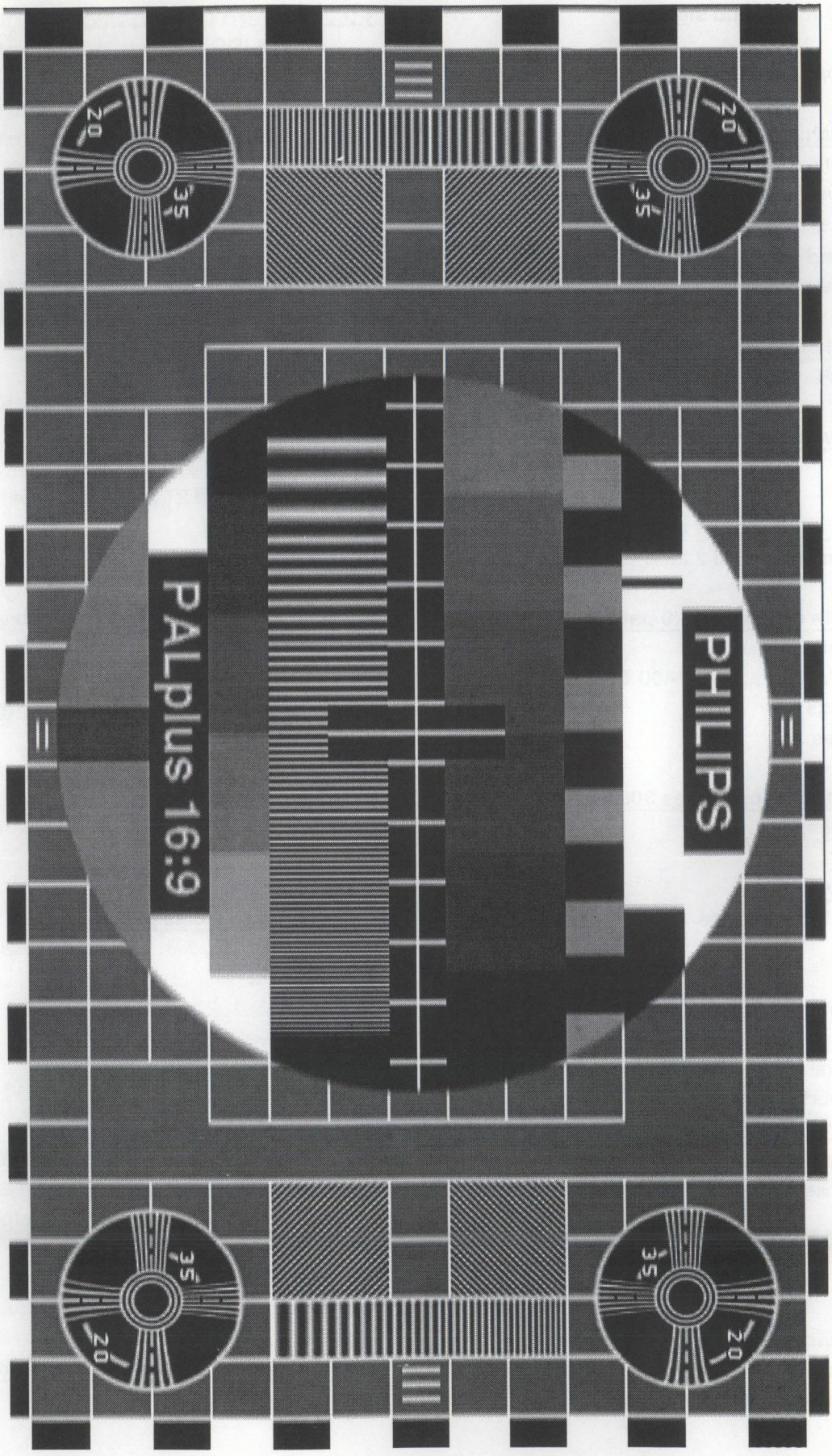

Fig. 3-1 PHILIPS Test Pattern, PALplus, 16:9 format

Digitized in Heiloo the Netherlands
Not for sale!

www.freeservicemanuals.info 1/19/2025

Digitized by www.freeservicemanuals.info 2025

3.2.1.3 Background signals

For 16:9 pattern:

Cross-hatch.
14 horizontal x 24 vertical lines.
Width of vertical lines:
200 ns ±5 %
Background level:
48 % of white

Horizontal overscan marks:
4, 5, and 6%

Vertical overscan marks:
4 and 5%

Black and white border castellation:
2.75% horizontally and 2.35% vertically

Elements in corner of 16:9 pattern:
Resolution wedges:
150-300 TV-lines and 250-400 TV-lines
Centre rings:
300 TV-lines

Blocks with diagonal lines 300 and 200 TV-lines.

Vertical sweep:
300-75 and 75-300 lines.

For 4:3 pattern
Cross-hatch:
14 horizontal x 18 vertical lines.
Width of vertical lines:
225 ns ±5 %
Background level:
48 % of white

Black/white border castellations.

Special functions for the 4:3 pattern:
Line 23 second half and line 623 first half can be switched between video and black.

3.2.2 Pattern Composition, PHILIPS Pattern, 14:9 Centre

The 14:9 PHILIPS pattern is a cropped 4:3 pattern. A total of 504 lines is displayed. The remaining lines (top and bottom) in every field are blanked.

3.2.3 Helper Timing Test Pattern

An artificially generated signal for test of delays between helper and letterbox signal combined with helper frequency test signals.
Pedestal amplitude:
350mV
Central vertical part:
Signal with 2T and 4T in letterbox.
PALplus modulated 2T and 4T in helper area.
Left part:
Two level bars: 50% and 100%.
Right part:
Sawtooth (positive slope, non alternating)

3.2.4 Helper Amplitude Test Pattern

PALplus full field signal for test of helper amplitude and frequency response.
Composed of 6 vertical rows (with different frequencies) by 3 horizontal columns:

Left and right vertical part:
Reference signals, with no helper signal content.
Frequencies:
DC, 0.25, 0.5, 1, 2 and 3 MHz
Pedestal level:
350mV

Central vertical part:
Signal with maximum content of modulated helper.
Baseband video signal line alternating 0/180°
Frequency for modulation of the helper signal:
DC, 0.25, 0.5, 1, 2, and 3 MHz
Pedestal level:
350mV

Black horizontal lines between the different rows.

Digitized in Heiloo the Netherlands Not for sale!

www.freeservicemanuals.info

Appendix A - Tables

A.1 Test Signals and Test Patterns

Signal name:	Description:	IEEE-488 RS232 Pattern no.:
PHILIPS Camera	PALplus 16:9 in camera mode	1
PHILIPS Camera, Text	PALplus 16:9 in camera mode, with identification text	2
PHILIPS Film	PALplus 16:9 in film mode	3
PHILIPS Film, Text	PALplus 16:9 in film mode, with identification text	4
Helper Timing Test	PALplus signal for evaluation of delay between letterbox and helper signal	5
Helper Ampl. Test	PALplus signal for evaluation of the helper amplitude/frequency response	6
Motion Detect. Test	PALplus signal for evaluation of the Motion Adaptive Colour Plus function	7
Zoneplate, Circ.	PALplus modulated zoneplate signal	8
PHILIPS 4:3	Standard PAL test pattern	9
PHILIPS 4:3, Text	Standard PAL test pattern, with identification text	10
Linesweep, 5MHz	PAL signal for test of PALplus compliance of transmitters *	11
Modulated Staircases	PAL signal for test of PALplus compliance of transmitters **	12
PLUGE, 2%, 4 levels	Standard PAL signal for for setting of contrast and brightness	13
PHILIPS 14:9	Cropped 4:3 signal, standard PAL modulated	14

* : 300 mV_{PP} signal, symmetrical around black.

** : 3 modulated staircases, symmmetrical around back.

A.2 Error Codes During Power Up Sequence

Error Message in Display	Error Cause
E(01) Memory/Back-up error	Generator memory back-up not valid
E(02) Communication error	Generator µP not responding
E(04) Communication error	Sync µP not responding
E(08) Communication error	Master memory back-up not valid
E(10) Communication error	Master µP, local IIC communication failed
E(20) Communication error	Front plate memory back-up not valid
E(40) Communication error	Front plate, local IIC communication failed
E(80) Communication error	Seriel communication between front plate and master-µP crashed.

Digitized in Heiloo the Netherlands Not for sale!

www.freeservicemanuals.info 1/19/2025

Digitized by www.freeservicemanuals.info 2025

A.3 WSS Codes

Description	Aspect Ratio				Enhanced Services				Subtitles			Reserved		
	Bit 0 Ascept Ratio	**Bit 1** Aspect Ratio	**Bit 2** Aspect Ratio	**Bit 3** Odd Parity	**Bit 4** Camera = '0' / Film mode = '1'	**Bit 5** Std. PAL = '0' / MACP = '1'	**Bit 6** No Helper = '0' / Helper = '1'	**Bit 7** Reserved, fixed to '0'	**Bit 8** No SbT = '0' / SbT = '1'	**Bit 9** Open Subtitles	**Bit 10** Open Subtitles	**Bit 11** Reserved, fixed to '0'	**Bit 12** Reserved, fixed to '0'	**Bit 13** Reserved, fixed to '0'
Full format 4:3	0	0	0	1	x	x	0	0	x	0	0	1	0	0
Letterbox 14:9 center	1	0	0	0	x	0	0	0	0	0	0	1	0	0
Letterbox 14:9 top	0	1	0	0	0	0	0	0	0	0	0	1	0	0
Letterbox 16:9 center	1	1	0	1	x	x	x	0	x	0	0	1	0	0
Letterbox 16:9 top	0	0	1	0	0	0	0	0	0	0	0	1	0	0
Letterbox >16:9 center	1	0	1	1	0	0	0	0	0	0	0	1	0	0
Full format 4:3, shoot and protect 14:9 center	0	1	1	1	0	0	0	0	0	0	0	1	0	0
Full format 16:9	1	1	1	0	0	0	0	0	0	0	0	1	0	0
Code violation of bit 3:														
Full format 4:3	0	0	0	0	0	0	0	0	0	0	0	0	0	0
Letterbox 14:9 top	0	1	0	1	0	0	0	0	0	0	0	0	0	0

Note: **x** bit can be programmed to 0 or 1

MACP = Motion Adaptive Colour Plus

SbT = Subtitling by Teletext

Digitized in Heiloo the Netherlands Not for sale!

www.freeservicemanuals.info 1/19/2025

SUPPLEMENT

Date: 1996-01-04 **PTV303**

PM 5644/HD, PM 5644/85, PM 5655, and PM 5689

SUPPLEMENT TO:	**PM 5644HD**	REFERENCE MANUAL: **9499 490 13411**
	PM 5644/85	REFERENCE MANUAL: **9499 493 09711**
	PM 5655	REFERENCE MANUAL: **9499 493 09211**
	PM 5689	REFERENCE MANUAL: **9499 493 09811**

Subject:
This supplement deals with corrections to the manuals and changes introduced during the production of the instruments.

Please replace pages 8-9 to 8-11 in above mentioned manuals with pages enclosed this supplement.

In Instruction Manuals for PM 5644/85 and PM 5655 please replace page 14-3 (13-3 in PM 5689) as well.

Printed in Denmark

Publication number: 9499 498 39011

Philips
TV Test
Equipment

PHILIPS

Digitized in Heiloo the Netherlands Not for sale!

www.freeservicemanuals.info

8.5 RS232/V24 Operation

8.5.1 Hardware Configuration

The interface comes with a 9-pin male D-connector, that via a DB-9 female to DB-25 male adapter, complies with the RS232(EIA)- and the V24 (CCITT) standard.

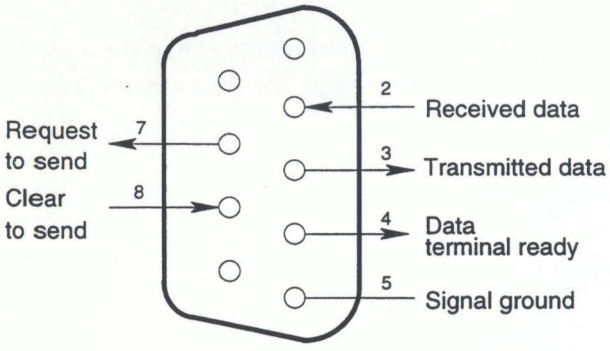

Fig. 8-3 Connector pin-out, RS232/V24

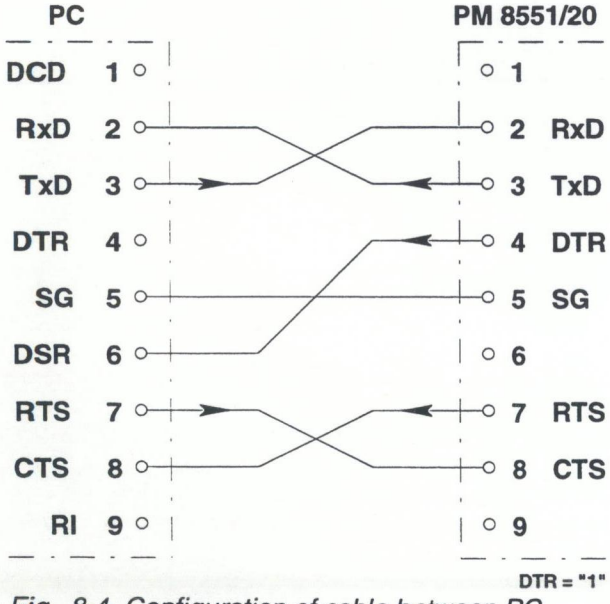

Fig. 8-4 Configuration of cable between PC and PM 8551/20.

The hardware configurationals include:
Communication settings:
- Baud rate
- Character length
- Parity selection

1. Communication settings:

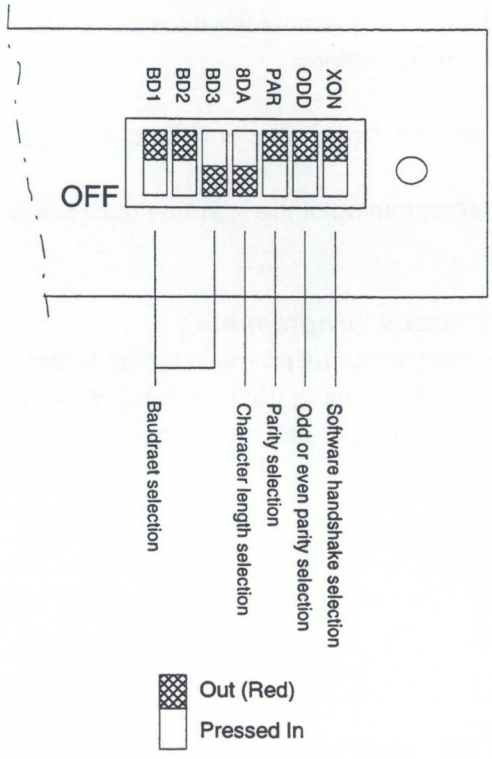

Fig. 8-5 Communication setting, SW1

BD1	BD2	BD3	Baudrate
off	off	off	110
on	off	off	150
off	on	off	300
on	on	off	600
off	**off**	**on**	**1200**
on	off	on	2400
off	on	on	4800
on	on	on	9600

Table 8-6 Baudrate setting

SWITCH	FUNCTION
8DA	**on : 8 data bits character length** off : 7 data bits character length
PAR	on : Parity on **off : Parity off**
ODD	on : Odd parity **off : Even parity**
XON	**Must be in *off* position**

Table 8-7 Character length, Parity and Handshake setting.

Bold = Standard Factory Setting

Digitized in Heiloo the Netherlands Not for sale!

www.freeservicemanuals.info 1/19/2025

Digitized by www.freeservicemanuals.info 2025

8.5.2 Interface Programming

The RS232/V24 remote interface can via the controller be configured with regard to:
– Record separator

Furthermore, it can run a number of 'Escape functions'.

The programming of the interface must follow the syntax illustrated on page 8-1.

1. Separator programming

The interface can be programmed to accept single and double separators. At power on the single separator "LF" is default setting (ISO code 10). When the interface sends data to the controller, the data stream is concluded with the programmed separator(s).

Definition of record separator(s).

HEADER	DATA	SUFFIX	RETURNS
SPR	n1 (,n2) Separator 1 : n1 Separator 2 : n2 n1 and n2 are the decimal quivalent (ISO code) of the desired separator(s). ESC (ISO 27), ETX (ISO 03) and EOT (ISO 04) are not allowed as separator. Default separator at power on is "LF" (ISO 10).	none	

Table 8-8 Programming, separator(s)

Example:
a) "SPR 13" defines "CR" as input/output separator.
b) "SPR 13, 10" defines the sequence "CR LF" as input/output separator.

2. Escape functions

ESCAPE (n)	Function
1	Goto local
2	Goto remote
3	Goto local and unlock
4	Device clear
5	Local lock out
7	Status request
8	Device trigger

Table 8-9 Escape functions

Digitized in Heiloo the Netherlands Not for sale!

www.freeservicemanuals.info

When using the "ESCAPE 7" function, a status byte will be send to the controller:

Bit	Condition
7	EXT
6	RQS
5	AB
4	BSY
3	EF3
2	EF2
1	EF1
0	EF0

Table 8-10 Status byte

EXT:
not used

RQS:
not used

AB:
Abnormal condition

	AB
0	Normal (no error)
1	Abnormal (error condition as specified by EF0-EF3)

BSY:
Busy

EF0-EF3:
Message flags

AB	EF3-EF0	Dec.	Message
0	0001	1	Message string available
1	1100	12	Number error
1	1101	13	Execute error
1	1110	14	Head/suffix error
1	1111	15	Syntax error

8.5.3 Device programming, RS232/V24

A list of the available programming commands and a description of the programming syntax to be used can be found in paragraph 8.4

Digitized in Heiloo the Netherlands

Not for sale!

www.freeservicemanuals.info

1/19/2025

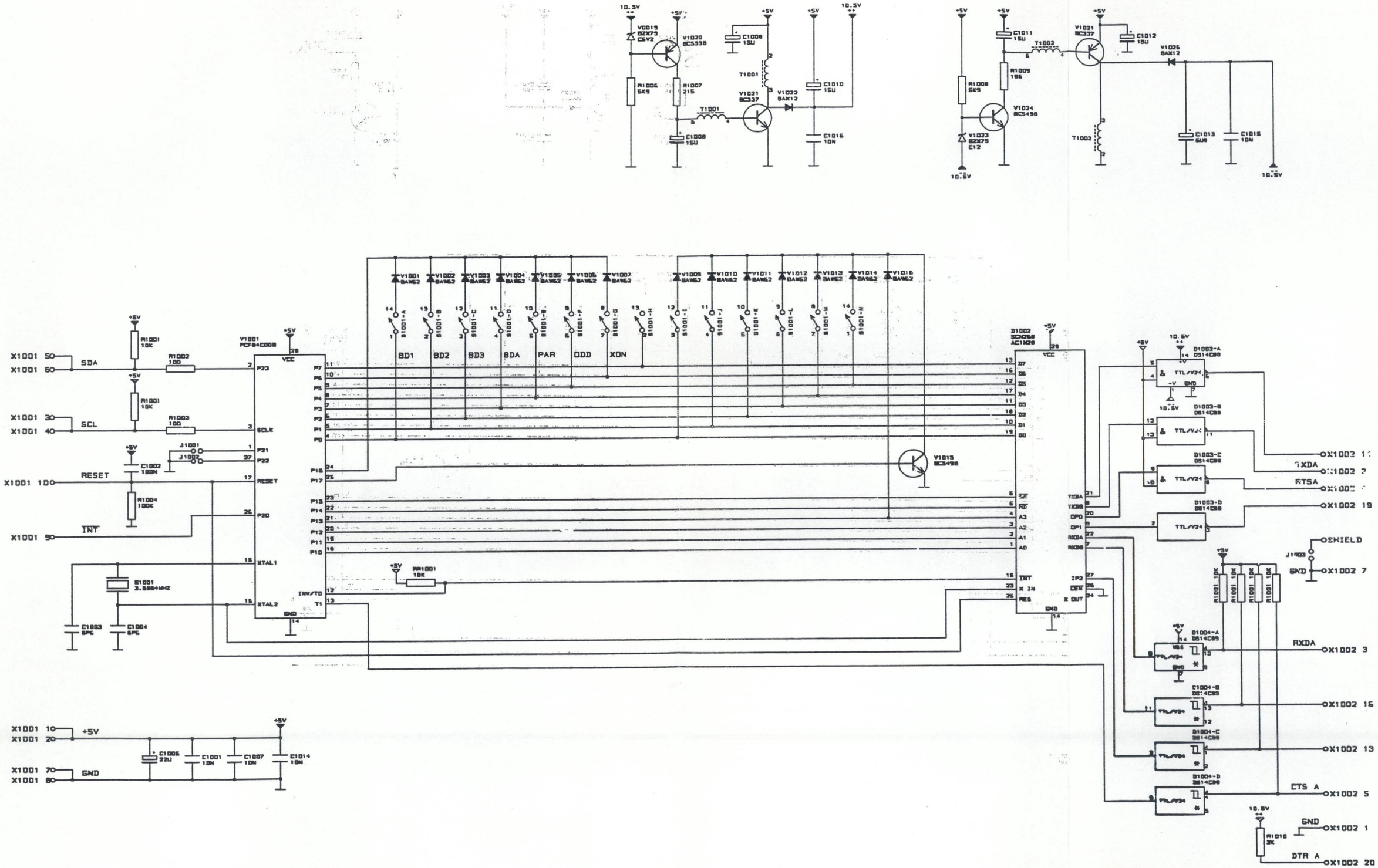

*Fig. 20-2 Circuit Diagram, **RS232/V24** remote interface (PM 8547/20) - unit 6*

Digitized in Heiloo the Netherlands

Not for sale!

www.freeservicemanuals.info 1/19/2025

PROTELEVISION TECHNOLOGIES SALES AND SERVICE WORLDWIDE

Argentina
Viditec sa
Humberto I 2887/9
1231 Buenos Aires
Tel. +54 1 308 4884
Fax: +54 1 308 5493
E-mail: viditec@starnet.net.ar

Australia
Philips Scientific & Industrial
Test & Measurement Division
34 Waterloo Road
P.O. Box 119. North Ryde,
Sydney N.S.W. 2113
Tel. +61 2 9888 0416
Fax: +61 2 9888 0440
E-mail:
Stephen.Boronkay@philips.com.au

Austria
Philips Professionelle
Elektronik G.m.b.H.
Fernseh-Studiotechnik
Triesterstrasse 64
A-1101 Wien
Tel. +43 1 60101 1512
Fax: +43 1 60101 1599
E-mail:
norbert.janda@at.ccmail.philips.com

Bahrain
Mohammed Fakhroo & Bros.
P.O.Box 439
Old Palace Road
Block No. 308, Gudaibiya
(Opp. Al Hadi Centre)
Tel. +973 253 529
Fax: +973 275 996
E-mail: kmurali@batelco.com.bh

Belgium
Philips Professional Systems S.A.
S&I Test and Measuring
Tweestationsstraat 80/80 Rue des Deux Gares
B-1070 Brussels
Tel. +32 2 525 6247
Fax: +32 2 525 7243
E-mail: philips.pma@skynet.be

Brazil
T&M Instruments Repres. Ltda.
P.O.Box 21473
Sao Paulo – SP
04602-970
Tel. +55 11 240 9526/240 9580/
535 4618
Fax: +55 11 240 2414
E-mail:tminstr@uol.com.br

Brunei
See Singapore

Canada
See USA

Chile
TECNO IMPORT
Monsenor Felix Cabrera No 23
Office No 21, Providencia
Santiago de Chile
Tel. +56 2232 1843
Fax: +56 2231 0097

China
See Hong Kong

Colombia
VIDEOELEC Limitada
Carrera 36 No. 101A-88 Piso 2
Santafé de Bogotá, D.C.
Tel. +57 1 256 7728/7892
Fax: +57 1 218 1444
E-mail:
videoelec.r_castaneda@ibm.net

Costa Rica
Electrocom
Apartado 7742
1000 San José
Tel. +506 2330 083
Fax: +506 2257 887

Czech Republic
IVC Ltd.
International Video Communications Ltd.
Pri trati 12
CZ-141 00 Praha 4
Tel. +420 2 42 69 64
Fax: +420 2 42 79 35
E-mail: ivc.praha@mbox.vol.cz

Denmark
PROTELEVISION TECHNOLOGIES
Kornmarksvej 21
2605 Brøndby
Tel. +45 4329 2400
Fax: +45 4329 2323
E-mail: helpdesk@ptv.dk

Egypt
Philips Egypt
10, Abdel Rahman El Rafie Street
Mohandessin
P.O. Box 242 Dokki
Cairo
Tel. +20 2 331 3846
Fax: +20 2 349 2142
E-mail: galal.aziz@ccmail.philips.com

Finland
See Denmark

France
PROTELEVISION TECHNOLOGIES
c/o Philips Electronique
Industrielle
22, avenue Descartes
B.P. 45
F-94454 Limeil Brévannes Cedex
Tel. +33 1 4510 5418
Fax: +33 1 4510 5391
E-mail:
106235.3445@compuserve.com

Germany
PROTELEVISION TECHNOLOGIES
Vertrieb TV Messtechnik
Vertriebsbüro Kassel
Landraf-Karl-Strasse 8
D-34123 Kassel
Tel. +49 561 314 9099
Fax: +49 561 314 9088
E-mail:rkm.ptv@t-online.de

9499 497 00411

Digitized in Heiloo the Netherlands Not for sale!

www.freeservicemanuals.info 1/19/2025

Digitized by www.freeservicemanuals.info 2025

PROTELEVISION TECHNOLOGIES SALES AND SERVICE WORLDWIDE

Greece
Philips Hellas S.A.
15, 25th March Street
GR-177 78 Tavros - Athens
Tel. +30 1 489 4422
Fax: +30 1 489 4434
E-mail:
Chris.rahiotis@gr.ccmail.philips.com

Hong Kong
PROTELEVISION TECHNOLOGIES
(Hong Kong)
Unit 55, 5/F
Hong Kong International
Trade & Exhibition Centre
1 Trademart Drive
Kowloon Bay
Kowloon,
Tel. +852 2620 1071
Fax +852 2620 1091
E-mail:
inelkihu@hkccmail.snads.philips.nl

Hungary
Philips Hungary Ltd.
Kinizi u. 30-36
H-1092 Budapest
(P.O. Box 114
H-1450 Budapest)
Tel. +36 1 382 1700
Fax:+36 1 216 4437
E-mail:
Sirinc.tombe@vud.philips.com

Iceland
See Denmark

India
Philips India Ltd.
25 Shivaji Marg
New Delhi - 110 015
Tel. +91 11 5455 788
Fax: +91 11 5469 691
E-mail: d.wali@pin.philips.com

Indonesia
Electronics Divn.
P.T. Daeng Brothers
Gedung Philips
Jl. Mampang Prapatan
Raya Kav. 99-100
Jakarta 12510
Tel. +62 21 794 0040 ext. 3902
Fax: +62 21 794 0080
E-mail:farid-db@rad.net.id

Ireland
See United Kingdom

Israel
RDT Equipment & Systems Ltd.
"ATIDIM" Advanced
Technologies Park, Neve sharet
P.O. Box 58072
Tel-Aviv 61580
Tel. +972 3 6450 749
Fax: +972 3 6478 908
E-mail: ravi@rdt.co.il

Italy
PROTELEVISION TECHNOLOGIES
Via U. Foscolo, 1
27040 Casatisma (PV)
Tel.: +39 383 891 694
Fax: +39 383 891 695
E-mail:
106403.3515@compuserve.com

Japan
TMS Tele Media Systems Corp.
Matsuzaki Bldg. 4F
Atago 1-2-2
Minato-ku Tokyo
Tel. +81 3 5472 8216
Fax:+81 3 5472 8217
E-mail:
tmsmedia@infosphere.or.jp

Latvia
Vivateh
2, Perses, P.O. Box 83
Riga, LV 1011
Tel. +371 7284 546
Fax: +371 7821 302
E-mail: teheentr@vivateh.lv

Malaysia
Meguro Electronics Sdn. Bdh.
36-1 Jalan 1/149 D,
Taman Sri Petaling
57000 Kuala Lumpur
Tel. +603 959 52 32
Fax +603 959 52 39
E-mail: tktan@mailcity.com

México
OLPEX de MEXICO, S.A. de C.V.
Carretera Picacho Ajusco No. 130-403
Col. Jardinas en la Montaña
C.P. 14210 México, Tlalpan, D.F.
Tel. +52 5 631 7766
Fax: +52 5 645 6882
E-mail: 105310.604@compuserve.

Morocco
See France

The Netherlands
PROTELEVISION TECHNOLOGIES
Lelyweg 1
7602 EA Almelo
Tel. +31 546 534 734
Fax: +31 546 534 785
E-mail: dmmh.pan.ptv@wxs.nl

New Zealand
Philips Scientific & Industrial
Test & Measurement Division
2 Wagener Place, Mt. Albert
Private Bag, St. Lukes
Auckland 3
Tel. +64 9 849 4160
Fax: +64 9 849 7814
E-mail:
gary.wicks@akl.pnz.philips.com

Norway
PROTELEVISION TECHNOLOGIES
c/o Philips Norge A/S
Sandsstuveien 70
Boks, Manglerud
N-0612 Oslo 6
Tel. +47 22 74 8383
Fax: +47 22 74 8388
E-mail:
perolavchristensen@no.ccmail.philips.c

9499 497 00411

Digitized in Heiloo the Netherlands Not for sale!

www.freeservicemanuals.info 1/19/2025

PROTELEVISION TECHNOLOGIES SALES AND SERVICE WORLDWIDE

Oman
Mustafa & Jawad
Science & Industry Co. LLC
P.O. Box 1918
Postal Code: 112, Ruwi
Tel. +968 602 009
Fax: +968 564 005/607 066
E-mail:
Siteam@gto.net.om

Pakistan
Philips Electrical Industries
of Pakistan Limited
Islamic Chamber of Commerce
ST-2A, Block 9, KDA Scheme 5
Clifton, Karachi - 75600
Tel. +92 21 587 4641/4649
Fax: +92 21 587 4546/577 035

Peru
Philips Peruana S.A.
Philips Projects
Av. Comandante Espinar 719
Miraflores
Lima 18
Tel. +511 241 2890
Fax: +511 241 2913

Philippines
Sunley inc.
8/F RCI Building
105 Rada St., Legaspi Village
Makati, Metro Manila
Tel. +63 2 818 1216
Fax: +63 2 815 0730
E-mail:
Sunley@ibm.net

Poland
Philips Polska
ul. Lukiska 10PL-04 123 Warszawa
Tel. +48 22 612 2594/ 2439 2831
Fax: +48 22 612 2327
E-mail:
Miroslaw.dlugocki@waw.ppf.philips.com

Portugal
Philips Portuguesa, S.A.
Rua Dr. António Loureiro Borges, 5
Arquiparque - MiraFlores
Apartado 300
P-2795 Linda-A-Velha
Tel. +351 1 416 3152
Fax: +351 1 416 3263
E-mail:
Babtista.fernandes@pt.ccmail.philips.com

Romania
RONEXPRIM S.R.L.
24 Transilvaniei Str.
P.O Box 1-285
70 778 Bucharest - 1
Tel. 401 314 3599 /3598/3597/3596
Fax: +401 313 6244 or
+401 659 4468
E-mail: ronexprim@rolink.ro

Russian Federation
NMA Eastern Europe B.V.
Michurinsky Avenue 49
117607 Moscow Russian Federation
Tel. +70 95 737 3495
Fax: +70 95 737 3494
E-mail:MD@nma.msk.ru

Saudi Arabia
A.Rajab & A. Silsilah
P.O. Box 203
Palastine Road, Hamrah District
Jeddah 21411
Tel. +966 2 661 0006
Fax: +966 2 661 0558/0164

Singapore
Panta Electronics NSF (Singapore)
Pte Ltd
Block 4010 Ang Mo Kio Ave 10
#05-11 Techplace 1
Singapore 569626
Tel. +65 456 5700
Fax: +65 456 0422
E-mail:
cmd007@mbox4.singnet.com.sg

South Africa
Tek Test
28 van Loggerenberg Avenue
Norkem Park Ext. 3
Kempton Park
1619
(P.O.Box 6090
Birchleigh1621)
Tel. +27 11 972 6005
Fax: +27 11 972 6005
E-mail:tektest@global.co.za

South Korea
PI International, Inc.
4th Fl. Daekyung Bldg. 839-15
Yeoksam-Dong, Kangnam-Ku
Seoul 135-080
Tel. +82 2508 3871
Fax: +82 2508 3874
E-mail:piintl@chollian.net

Spain
Philips Telecomunicaciones S.A.
Martínez Villergas, núm. 49
E-28027 Madrid
Tel. +34 91 566 9604
Fax: +34 91 403 4208
E-mail:
juan.m.cervera@ es.ccmail.philips.com

Sweden
Danmon Svenska AB
Stockholmsvägen 116 B.
S-183 30 Täby
Tel. +46 08 768 0705
Fax: +46 08 768 2667
E-mail: info@danmon.se

Switzerland
Philips Business Electronics AG
PTV
Allmendstrasse-140
CH-8027 Zürich
Tel. +41 1 488 2211
Fax: +41 1 488 3278
E-mail:
101350.2246@compuserve.com

9499 497 00411

Digitized in Heiloo the Netherlands Not for sale!

www.freeservicemanuals.info 1/19/2025

Digitized by www.freeservicemanuals.info 2025

PROTELEVISION TECHNOLOGIES SALES AND SERVICE WORLDWIDE

Taiwan, R.O.C.

Yung Kang Trading Co., Ltd.
11th Floor, CTS Building
102 Kuang Fu S. Road
P.O. Box 1467. Taipei
Tel. +886 2 2752 7421
Fax: +886 2 2776 1753
E-mail: ykt@ms8.hinet.net

Thailand

Philips Electronics Thailand Ltd.
Professional Activities Div.
209/2 Sanpavut - Bangna Road
Prakanong, Bangkok 10260
Tel. +66 2 745 4090
Fax: +66 2 399 2714
E.mail:
thpathwo@thccmail.snads.philips.nl

Turkey

Türk Philips Ticaret A.S.
Talatpasa Cad. No. 5
80640 Gültepe - Istanbul
(P.O. Box 161
80622 Levent - Istanbul)
Tel. +90 212 279 2770
Fax: +90 212 282 6707
E-mail:
Aral_izmitli@philips.com.tr

United Kingdom

PROTELEVISION TECHNOLOGIES
c/o Philips Projects
Cromwell Road
Cambridge CB1 3HE
Tel. +44 1223 212 288
Fax: +44 1223 245 155
E-mail:
101645.2113@compuserve.com

U. S. A.

PROTELEVISION TECHNOLOGIES
A division of Edax International
91 McKee Drive
Mahwah
New Jersey 07430
Tel. +1 201 529 2188
Fax: +1 201 529 2109
E-mail: pvtna@compuserve.com

Venezuela

CANAL MASTER C.A.
Centro Empresarial KM 1
Edificio #2, Penthouse
Carretera Panamericana, Piso 8
Caracas
Tel. +58 2 68 228 23
Fax: +58 2 68 227 32
E-mail:
cmaster@cantv.net

Vietnam

Philips Singapore Pte. Ltd.
Vietnam Representative Office
37-39 Ton That Thiep St., Dist. 1
Ho Chi Minh City
Tel. +848 8224459
Fax: +848 82 91 265

9499 497 00411

Digitized in Heiloo the Netherlands Not for sale!