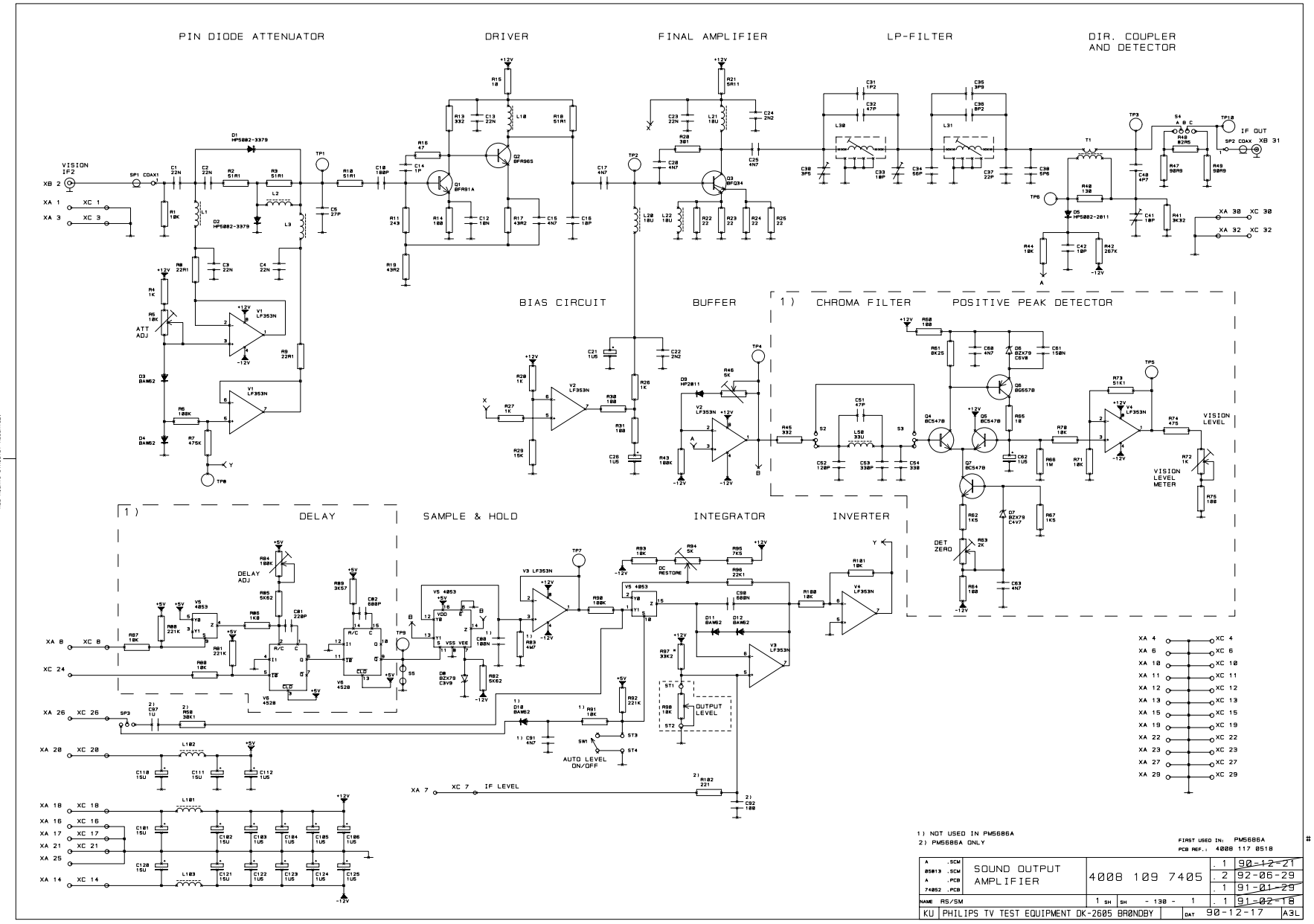

1) NOT USED IN PM5686A
2) PM5686A ONLY

FIRST USED IN: PM5686A
PCB REF.: 4008 117 0518

A .SCM 85013 .SCM A .PCB 74052 .PCB	SOUND OUTPUT AMPLIFIER	4008 109 7405	.1 .2 .1 .1	90-12-21 92-06-29 91-01-29 91-02-18
NAME RS/SM		1 SH SH - 130 - 1		
KU	PHILIPS TV TEST EQUIPMENT DK-2605 BRØNDBY	DAT 90-12-17		A3L

PROPERTY OF PHILIPS TV TEST EQUIPMENT A/S
ALL RIGHTS STRICTLY RESERVED.

28.74

73%