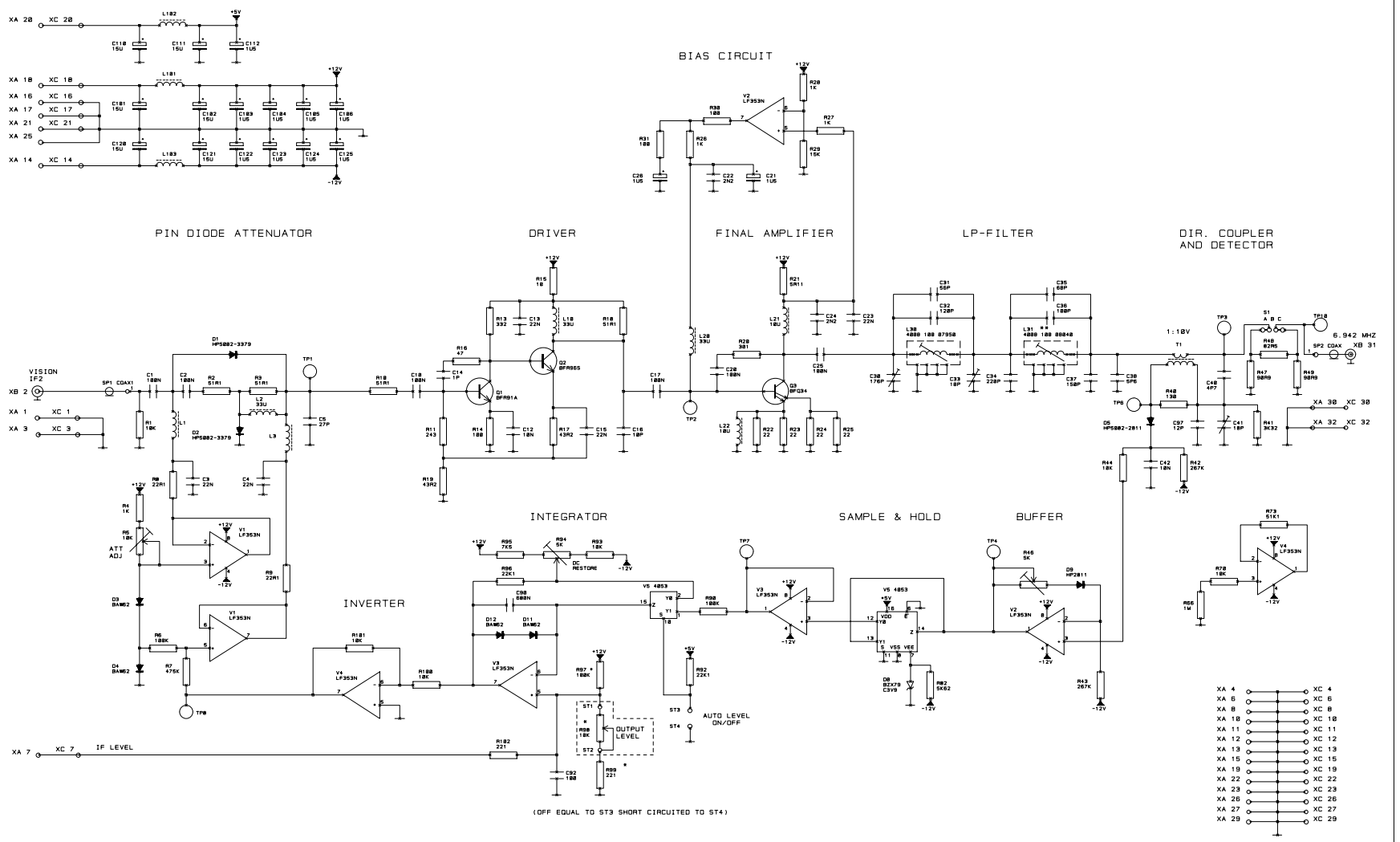

* NOT MOUNTED
** WITHOUT TAPPING

FIRST USED IN: PM5686A
PCB REF.: 4008 117 0518

A .SCM 7827S .SCM A .PCB 85181 .PCB	SOUND OUTPUT AMPLIFIER	4008 109 7827	. 1	92-07-13
NAME RS/SM		1 SH SH - 130 - 1		
KU	PHILIPS TV TEST EQUIPMENT DK-2605 BRØNDBY		DAT 92-07-13	A3L

PROPERTY OF PHILIPS ELECTRONIC INDUSTRY A/S
ALL RIGHTS STRICTLY RESERVED.