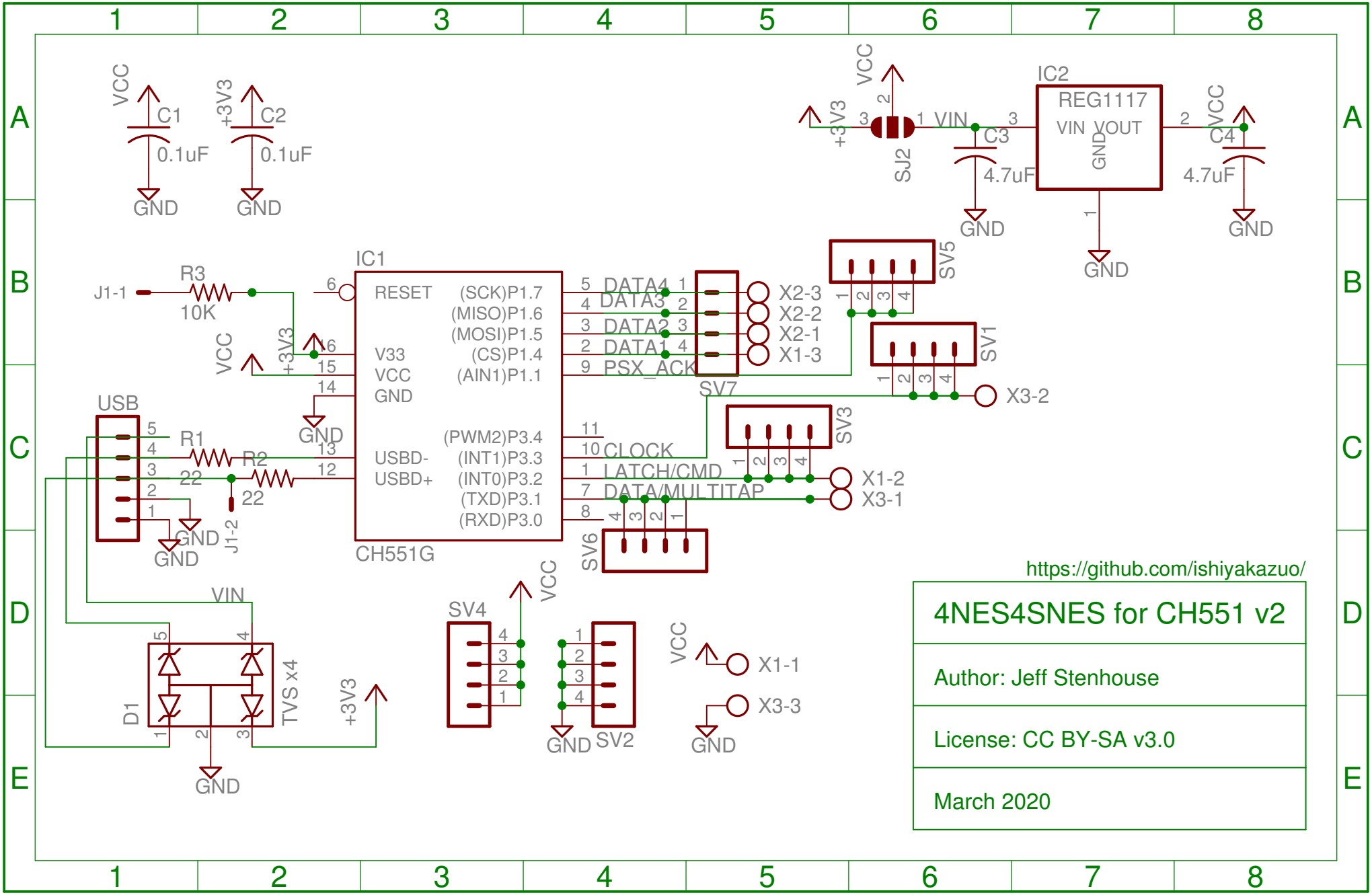
VCC
C1
0.1uF
GND
+3V3
C2
0.1uF
GND
VCC
+3V3
SJ2
VIN
IC2
REG1117
VIN VOUT
GND
C3
4.7uF
GND
VCC
C4
4.7uF
GND
GND
J1-1
R3
10K
IC1
RESET
V33
VCC
GND
USBD-
USBD+
(SCK)P1.7
(MISO)P1.6
(MOSI)P1.5
(CS)P1.4
(AIN1)P1.1
(PWM2)P3.4
(INT1)P3.3
(INT0)P3.2
(TXD)P3.1
(RXD)P3.0
CH551G
DATA4
DATA3
DATA2
DATA1
PSX_ACK
CLOCK
LATCH/CMD
DATA/MULTITAP
SV7
X2-3
X2-2
X2-1
X1-3
SV5
SV1
X3-2
SV3
X1-2
X3-1
SV6
USB
R1
22
R2
22
J1-2
GND
VIN
D1
TVS x4
+3V3
SV4
VCC
SV2
GND
X1-1
X3-3
https://github.com/ishiyakazuo/
4NES4SNES for CH551 v2
Author: Jeff Stenhouse
License: CC BY-SA v3.0
March 2020