Processor

File: Processor.kicad_sch

Logic, IDE

File: Logic.kicad_sch

Expansion Memory

File: ExpansionMemory.kicad_sch

Base Memory, Spares, Power

File: BaseMemory.kicad_sch

Card Edge

File: Card Edge.kicad_sch

CPLD 1

File: CPLD1.kicad_sch

Jumpers

File: jumpers.kicad_sch

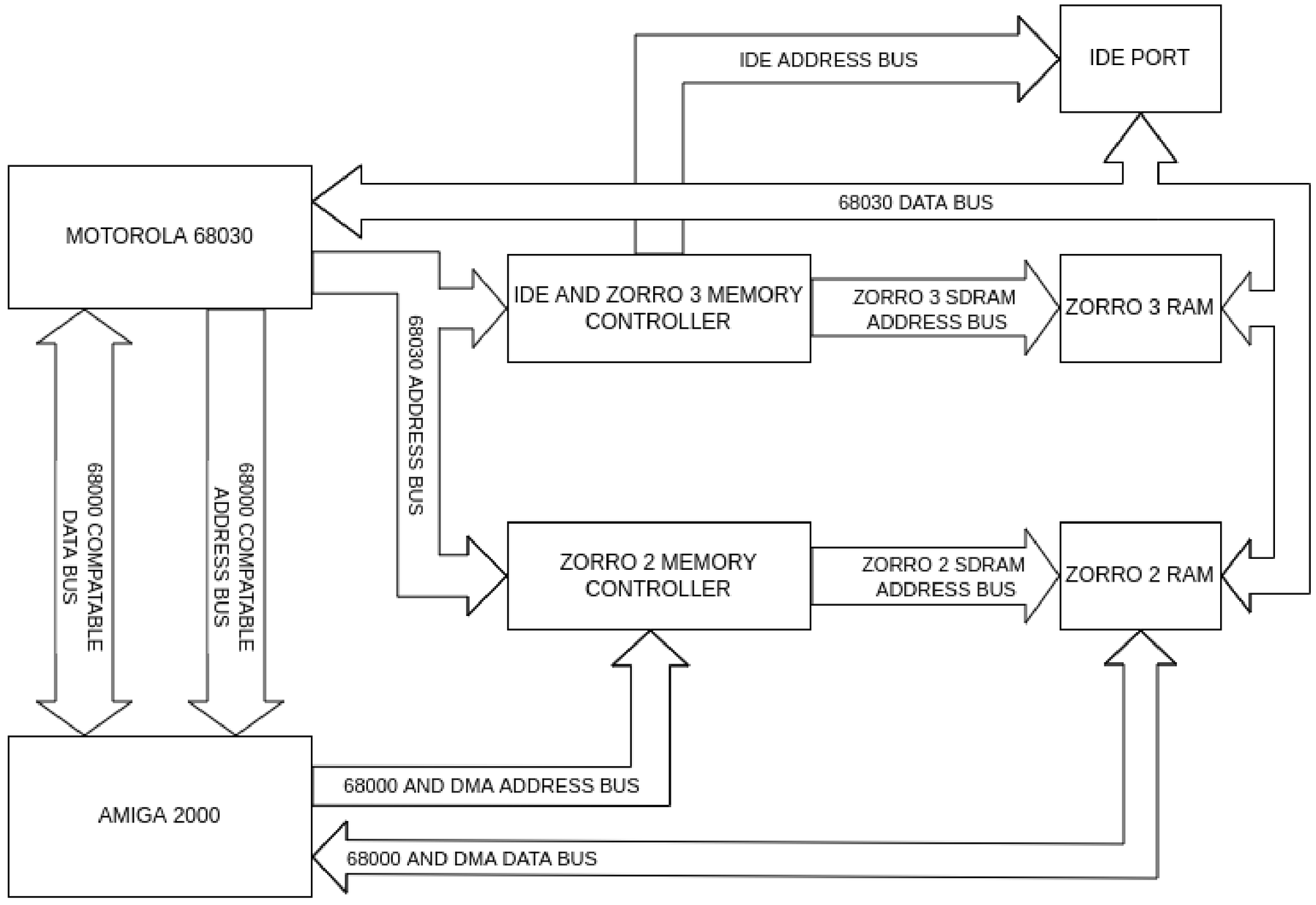

AMIGA N2630

Sheet: /
File: N2360.kicad_sch

Title: Amiga N2630

Size: B	Date: 2023-02-17	**Rev: 4.0.0b**
KiCad E.D.A. kicad 6.0.11-2627ca5db0-126-ubuntu20.04.1		Id: 1/8

Jumper	Description	Shorted	Open
J302	Amiga Version	A2000	B2000
J304	OS Mode	Unix	Amiga OS
J403	Zorro 2 RAM	Disable	Enable
J404	Z2 4/8MB	4MB	8MB
J405	Zorro 3 RAM	Disable	Enable

Zorro 3 RAM Banks Populated	J400
Low Bank Only	Open
Both Banks	Shorted

Desired Zorro 3 RAM (MB)	SDRAM Capacity	J401	J402
32	4MX16	Open	Shorted
64	8MX16	Shorted	Open
128	16Mx16	Shorted	Shorted
256	32MX16	Open	Open

NOTE: J401 and J402 have no effect if J400 is open.

Jumper	Description	1-2	2-3
J202	FPU Clock	X1	X2

JUMPER SETTINGS

Sheet: /Jumpers/
File: jumpers.kicad_sch

Title: Amiga N2630

Size: B	Date: 2023-02-17	**Rev: 4.0.0b**
KiCad E.D.A. kicad 6.0.11-2627ca5db0-126-ubuntu20.04.1		Id: 1/8

PGA MC68882

_CBACK
_CBREQ
_CIIN
_AVEC
_IPL[2..0]
_FPUCS
_SENSE
_GRESET
D[31..0]
A[31..0]

+5V
U2204G 74AHCT04 VCC GND
C204 0.1uF
GND

U200
MC68030
CPUCLK 49 CLKIN
_BR 1 BR
_BG 15 BG
_BGACK 29 BGACK
_HALT 70 HALT
_CPURESET 61 RESET
_BERR 69 BERR
R238 68
_STERM 63 STERM
_DSACK1 64 DSACK1
_DSACK0 55 DSACK0
_DS R216 68 DS_030 82 DS
_AS R212 68 _AS_030 76 AS
R_W R213 68 R_W_030 92 R_W
FC2 40 FC2
FC1 27 FC1
FC0 41 FC0
SIZ0 91 SIZ0
SIZ1 83 SIZ1
AVEC 50
IPEND 54
IPL2 67 _IPL2
IPL1 68 _IPL1
IPL0 74 _IPL0
CDIS 73 CDIS
MMUDIS 62 MMUDIS
STATUS 79
REFILL 80
CIOUT 28
CIIN 90
CBREQ 81
CBACK 75
DBEN 103
OCS 42
ECS 104 _ECS
D0..D31 89..116
NC 44 53 58 59 85
A0..A31 2 30 48 47 39 38 46 26 25 37 13 36 24 12 23 11 22 10 34 9 21 8 20 7 6 19 5 18 4 17 3 16
GND 31 33 35 51 57 65 66 77 78 94 96 97 98 52
R237 R228 R229 R230 R231 R232 R233 R234 R235 R236 3.3K
R131 1K
RN109 1K
RN108 1K
RN110 1K
R106 R105 R104 R103 R102 R101 R100 1K

U201
MC68882
VCC 1 11 18 32 33 46 50
SENSE 14
R_W 60
DS 39
AS 43
CS 54
SIZE 35
DSACK1 62
DSACK0 52
CLK 22
RESET 27
A4 40
A3 49
A2 44
A1 59
A0 45
GND 2 10 12 13 17 21 23 28 34 36 47 56 61
NC 31
D31 53
D30 63
D29 64
D28 54
D27 65
D26 66
D25 55
D24 67
D23 57
D22 68
D21 58
D20 41
D19 48
D18 42
D17 37
D16 38
D15 30
D14 26
D13 25
D12 29
D11 20
D10 19
D9 24
D8 9
D7 8
D6 7
D5 16
D4 6
D3 5
D2 15
D1 4
D0 3

+3.3V
+5V
R225 R224 R223 R222 R221 R220 R219 R218 R217 1K
RN104 1K
RN105 1K
RN106 1K
RN107 1K
GND

CPUCLK_A
X1 25MHz
R226 1K
CX1 0.01uF
Tristate Vcc GND OUT
R204 68
U204F 74AHCT04
R207 68
C211 22pF
R209 68
U204A 74AHCT04
74AHCT04 U204B
CPUCLK_B
R206 68
C210 22pF
U204E 74AHCT04
R210 68
C212 22pF
X2 50MHz
R227 1K
CX2 0.01uF
R203 68
U204D 74AHCT04
R211 68
C213 22pF
25/FPU J202

PROCESSOR

Sheet: /Processor/
File: Processor.kicad_sch
Title: Amiga N2630
Size: B | Date: 2023-02-17 | **Rev: 4.0.0b**
KiCad E.D.A. kicad 6.0.11-2627ca5db0-126-ubuntu20.04.1 | Id: 2/8

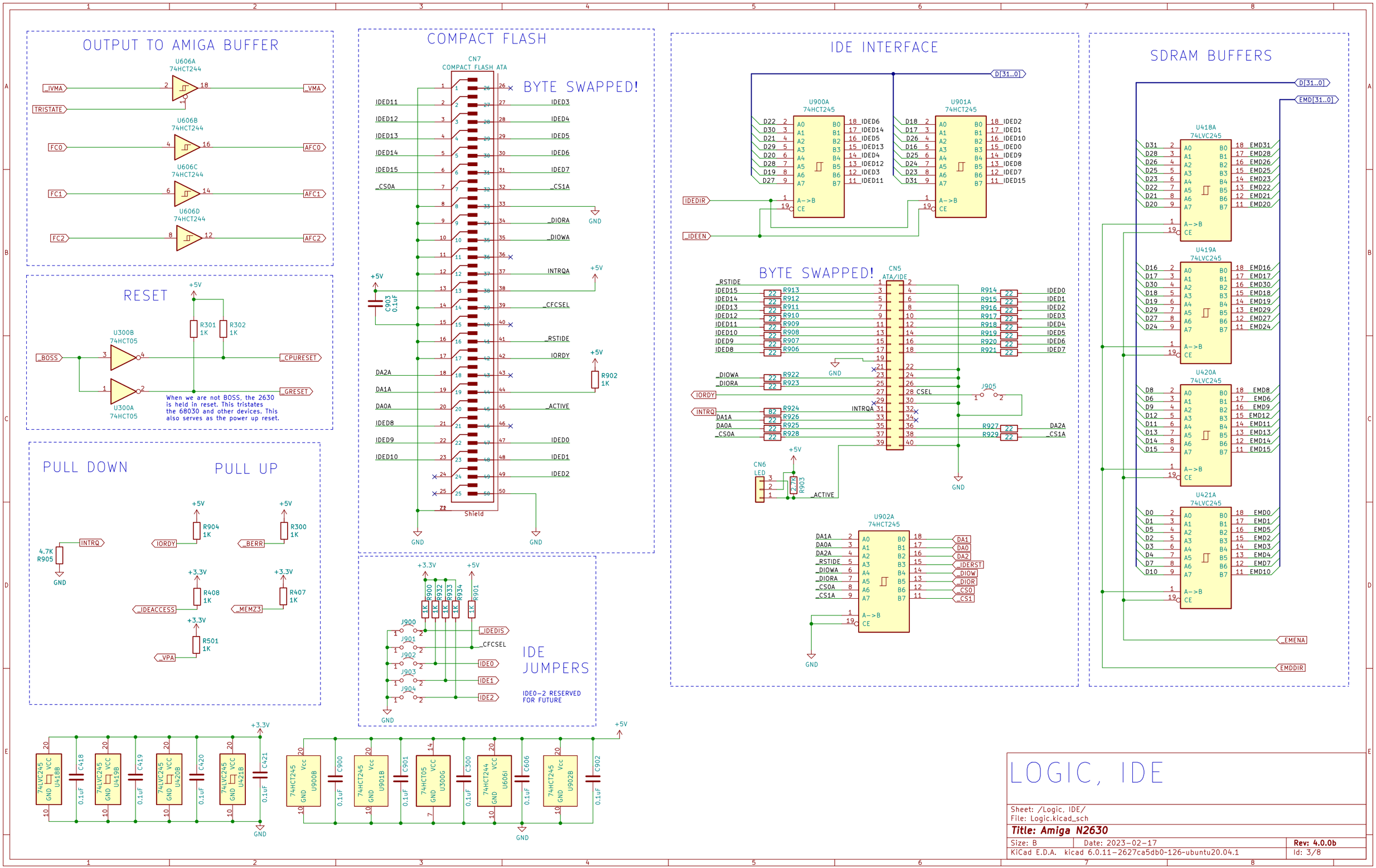
OUTPUT TO AMIGA BUFFER
U606A 74HCT244
U606B 74HCT244
U606C 74HCT244
U606D 74HCT244
_IVMA
TRISTATE
FC0
FC1
FC2
_VMA
AFC0
AFC1
AFC2
RESET
U300B 74HCT05
U300A 74HCT05
R301 1K
R302 1K
_BOSS
_CPURESET
_GRESET
When we are not BOSS, the 2630 is held in reset. This tristates the 68030 and other devices. This also serves as the power up reset.
PULL DOWN
PULL UP
R905 4.7K
INTRQ
IORDY
R904 1K
_BERR
R300 1K
_IDEACCESS
R408 1K
_MEMZ3
R407 1K
_VPA
R501 1K
COMPACT FLASH
CN7 COMPACT FLASH ATA
BYTE SWAPPED!
C903 0.1uF
R902 1K
Shield
IDE JUMPERS
IDE0-2 RESERVED FOR FUTURE
_IDEDIS
CFCSEL
IDE0
IDE1
IDE2
IDE INTERFACE
U900A 74HCT245
U901A 74HCT245
D[31..0]
IDEDIR
_IDEEN
BYTE SWAPPED!
CN5 ATA/IDE
J905
CN6 LED
R903 2.7K
U902A 74HCT245
SDRAM BUFFERS
U418A 74LVC245
U419A 74LVC245
U420A 74LVC245
U421A 74LVC245
EMD[31..0]
_EMENA
EMDDIR
LOGIC, IDE
Sheet: /Logic, IDE/
File: Logic.kicad_sch
Title: Amiga N2630
Size: B
Date: 2023-02-17
Rev: 4.0.0b
KiCad E.D.A. kicad 6.0.11-2627ca5db0~126~ubuntu20.04.1
Id: 3/8

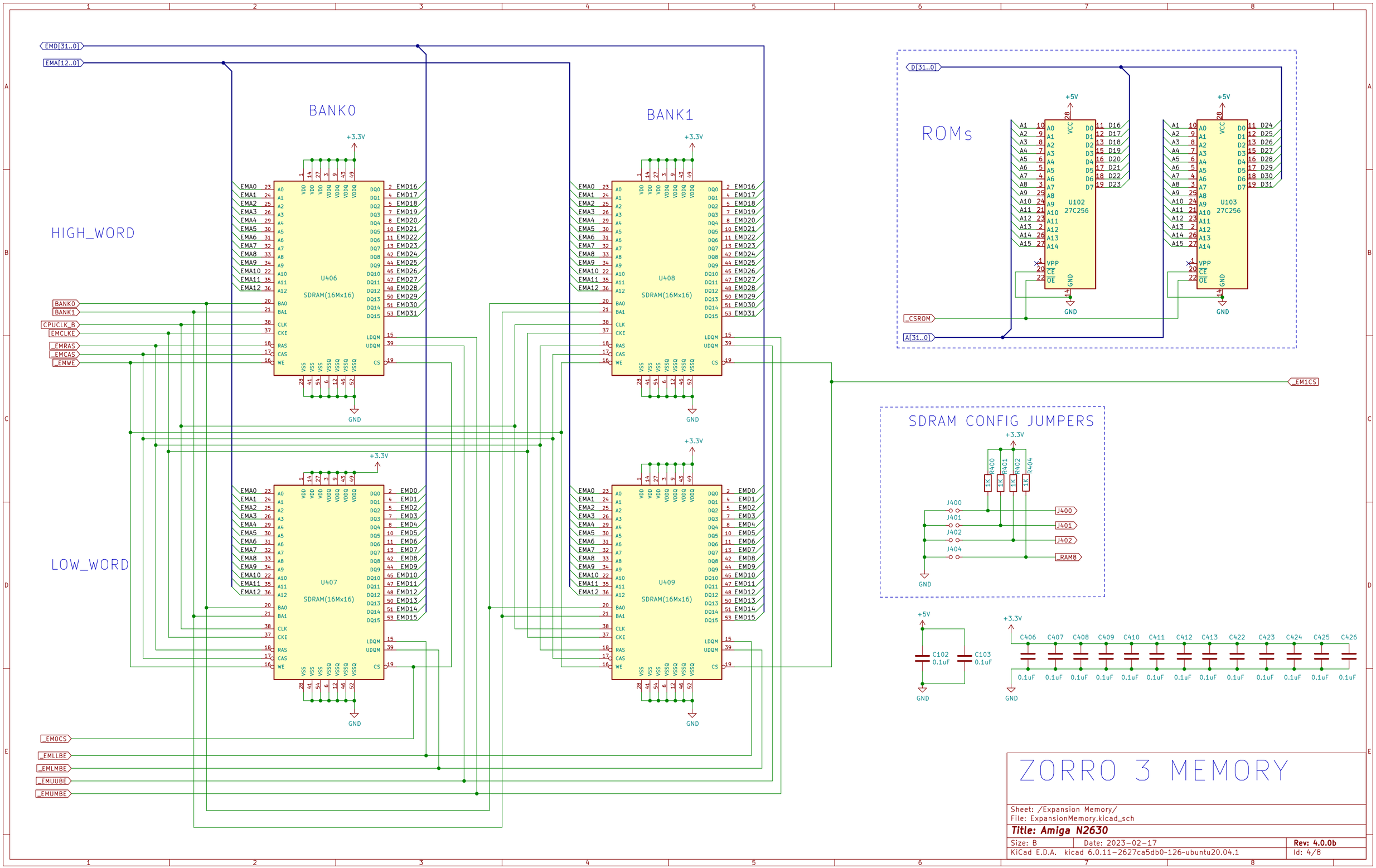

ZORRO 3 MEMORY

Sheet: /Expansion Memory/
File: ExpansionMemory.kicad_sch

Title: Amiga N2630

Size: B	Date: 2023-02-17	**Rev: 4.0.0b**
KiCad E.D.A. kicad 6.0.11-2627ca5db0~126~ubuntu20.04.1		Id: 4/8

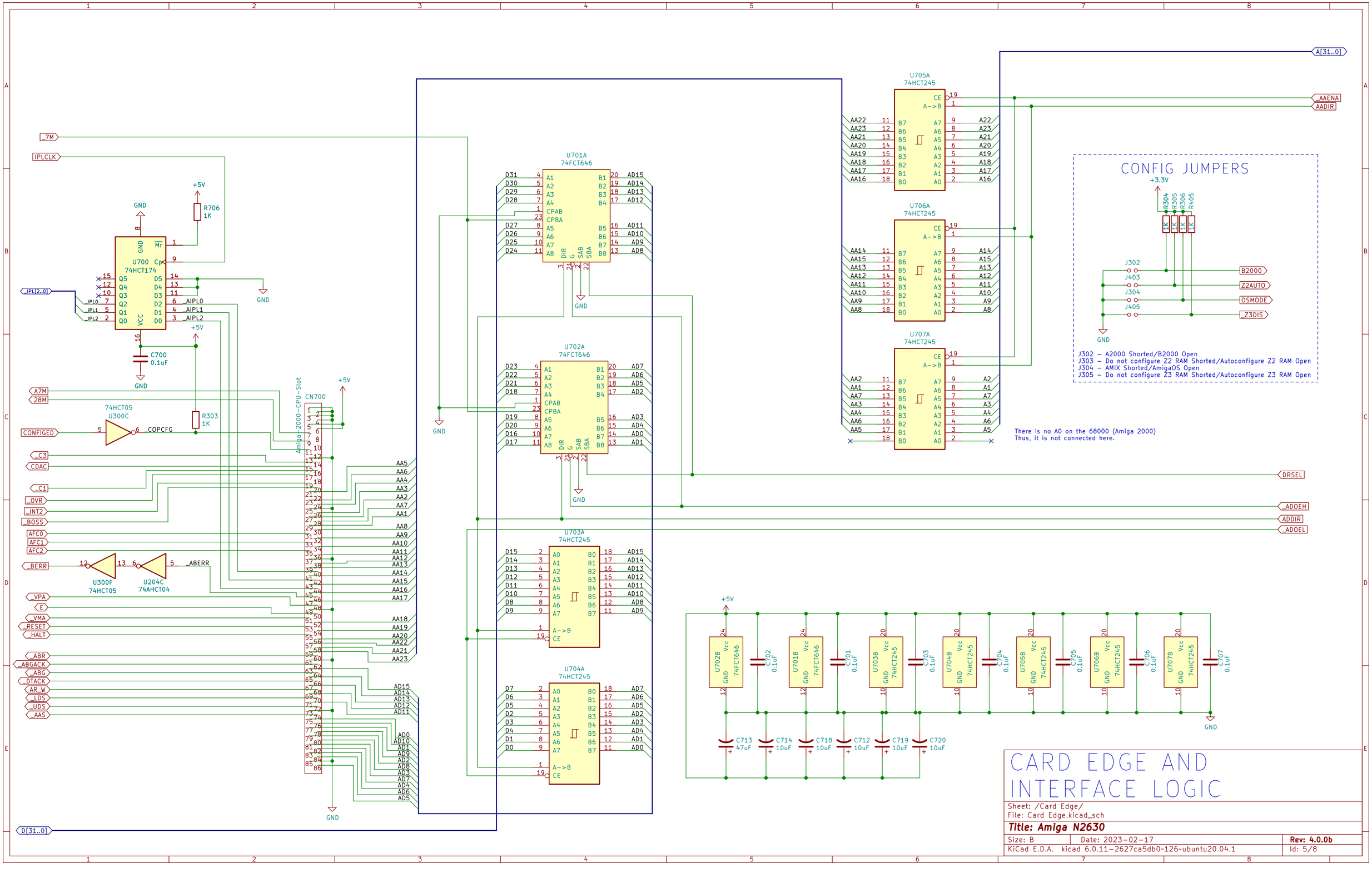
_7M
IPLCLK
+5V
GND
R706
1K
U700
74HCT174
IPL[2..0]
IPL0
IPL1
IPL2
_AIPL0
_AIPL1
_AIPL2
C700
0.1uF
A7M
28M
74HCT05
U300C
CONFIGED
_COPCFG
R303
1K
_C3
CDAC
_C1
_OVR
_INT2
_BOSS
AFC0
AFC1
AFC2
_BERR
U300F
74HCT05
U204C
74AHCT04
_ABERR
_VPA
E
_VMA
_RESET
_HALT
_ABR
_ABGACK
_ABG
_DTACK
AR_W
_LDS
_UDS
_AAS
CN700
Amiga-2000-CPU-Slot
AA5
AA6
AA4
AA3
AA2
AA7
AA1
AA8
AA9
AA10
AA11
AA12
AA13
AA14
AA15
AA16
AA17
AA18
AA19
AA20
AA22
AA21
AA23
AD15
AD14
AD13
AD12
AD11
AD10
AD1
AD9
AD0
AD8
AD2
AD3
AD7
AD4
AD6
AD5
D[31..0]
U701A
74FCT646
U702A
74FCT646
U703A
74HCT245
U704A
74HCT245
DIR
G
SAB
SBA
CPAB
CPBA
A->B
CE
U705A
74HCT245
U706A
74HCT245
U707A
74HCT245
A[31..0]
_AAENA
AADIR
DRSEL
_ADOEH
ADDIR
_ADOEL
CONFIG JUMPERS
R304
R305
R306
R405
J302
J403
J304
J405
B2000
Z2AUTO
OSMODE
_Z3DIS
J302 – A2000 Shorted/B2000 Open
J303 – Do not configure Z2 RAM Shorted/Autoconfigure Z2 RAM Open
J304 – AMIX Shorted/AmigaOS Open
J305 – Do not configure Z3 RAM Shorted/Autoconfigure Z3 RAM Open
There is no A0 on the 68000 (Amiga 2000)
Thus, it is not connected here.
U702B
U701B
U703B
U704B
U705B
U706B
U707B
Vcc
GND
C702
C701
C703
C704
C705
C706
C707
0.1uF
C713
47uF
C714
C718
C712
C719
C720
10uF
CARD EDGE AND INTERFACE LOGIC
Sheet: /Card Edge/
File: Card Edge.kicad_sch
Title: Amiga N2630
Size: B
Date: 2023-02-17
Rev: 4.0.0b
KiCad E.D.A. kicad 6.0.11-2627ca5db0-126-ubuntu20.04.1
Id: 5/8

ZMA[12..0]

+3.3V

U400
SDRAM(4Mx16)
ZMA0 ZMA1 ZMA2 ZMA3 ZMA4 ZMA5 ZMA6 ZMA7 ZMA8 ZMA9 ZMA10 ZMA11 ZMA12
ZBANK0 ZBANK1
CLK CKE _ZRAS _ZCAS _ZWE
LDQM UDQM _ZCS
VDD VDDQ VSS VSSQ
EMD16 EMD17 EMD19 EMD18 EMD20 EMD21 EMD22 EMD23 EMD24 EMD25 EMD26 EMD27 EMD28 EMD29 EMD30 EMD31
_ZUMBE _ZUUBE
GND

EMD[31..0]

EMD0 EMD5 EMD3 EMD7 EMD8 EMD9 EMD11 EMD14 EMD1 EMD2 EMD4 EMD10 EMD6 EMD12 EMD13 EMD15 EMD16 EMD30 EMD19 EMD27 EMD31 EMD26 EMD23 EMD21 EMD17 EMD18 EMD29 EMD24 EMD28 EMD25 EMD22 EMD20
RN400 3.3K RN401 3.3K RN402 3.3K RN403 3.3K
+3.3V

U401
SDRAM(4Mx16)
ZMA0 ZMA1 ZMA2 ZMA3 ZMA4 ZMA5 ZMA6 ZMA7 ZMA8 ZMA9 ZMA10 ZMA11 ZMA12
ZBANK0 ZBANK1
CLK CKE RAS CAS WE
LDQM UDQM CS
VDD VDDQ VSS VSSQ
EMD0 EMD1 EMD2 EMD3 EMD4 EMD5 EMD6 EMD7 EMD8 EMD10 EMD9 EMD12 EMD11 EMD13 EMD14 EMD15
_ZLLBE _ZLMBE _ZCS _ZWE _ZCAS _ZRAS
GND

CPUCLK_A
ZCLKE

CPU/FPU DECOUPLING

+5V
C209 C201 C205 C206 C208 C200 C202 C214 C215 C216 C218 C219 C220
0.22uF 0.1uF 330pF 0.1uF 0.1uF 0.1uF 0.1uF 0.1uF 0.1uF 0.1uF 0.1uF 0.1uF 0.1uF
GND

+3.3V

+5V
U800
AP7361C-33ER
VI VO GND
C801 4.7uF
C800 4.7uF
C802 10uF
C803 47uF
C804 10uF
C805 10uF
+3.3V
GND

C427 C428 C429 C430 C431 C432
0.1uF
+3.3V
GND

JT1 MODE68K — MODE68K
JT2 SMDIS — SMDIS
JT4 _IDEACCESS — _IDEACCESS
JT5 _MEMZ3 — _MEMZ3
JT6 _MEMZ2 — _MEMZ2

SPARES

U300D 74HCT05
U300E 74HCT05
U606E 74HCT244
U606F 74HCT244
U606G 74HCT244
U606H 74HCT244
GND

MOUNTING HOLES

H1 MountingHole
H2 MountingHole
GND

RESERVED FOR FUTURE

+3.3V
R600 1K
R601 1K
SW1 MODE
_MODE0
_MODE1
GND

ZORRO 2 MEMORY, SPARES, POWER

Sheet: /Base Memory, Spares, Power/
File: BaseMemory.kicad_sch

Title: Amiga N2630

Size: B	Date: 2023-02-17	**Rev: 4.0.0b**
KiCad E.D.A. kicad 6.0.11-2627ca5db0-126-ubuntu20.04.1		Id: 6/8

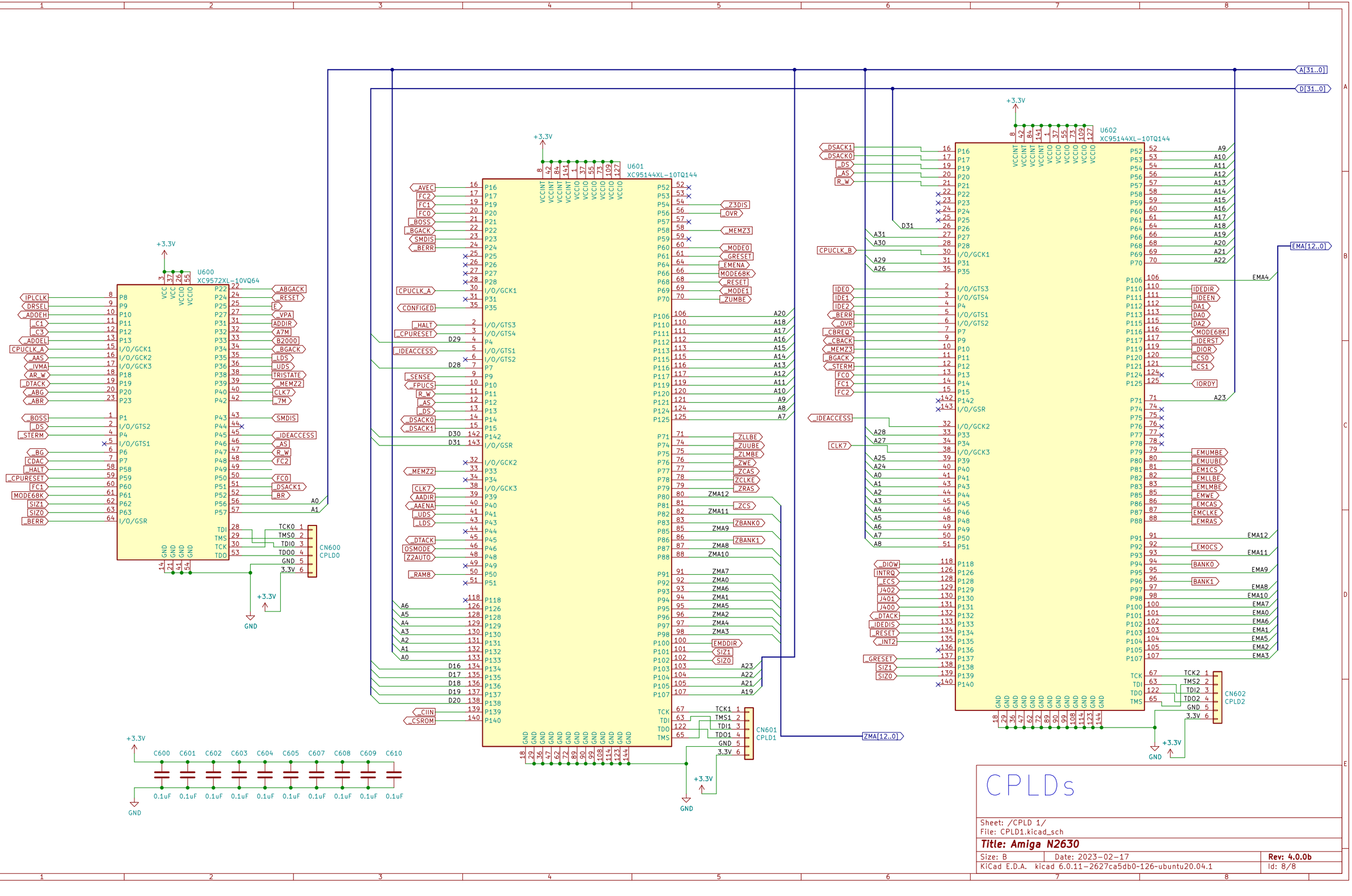

CPLDs

Sheet: /CPLD 1/	
File: CPLD1.kicad_sch	
Title: Amiga N2630	
Size: B	Date: 2023-02-17
KiCad E.D.A. kicad 6.0.11-2627ca5db0~126~ubuntu20.04.1	Id: 8/8

Rev: 4.0.0b