JVC

SERVICE MANUAL

COMPUTERIZED REMOTE SYSTEM CONTROLLER WITH GRAPHIC EQUALIZER

MODEL **SEA-RM20BK**

Contents

	Page
Safety Precautions	1-2
Instruction Book	
Block Diagram	1-3
Technical Explanations	
■ Terminal Layout Diagram	1-4
■ Interior Block Diagram	1-4
■ Explanation of Each Terminal	1-5
■ Data Transmission through Synchro Terminal	1-6
■ Relationship between Remote Control Transmitter and DCS Codes	1-7
Removal Procedures	1-8
Troubleshooting	1-9
Connection Diagram	1-11
Handling Precautions of LCD Panels	1-12
Servicing Method for AWG #20 Wires with Clamping Terminals	1-13
Internal Block Diagrams of Major ICs	1-14
Schematic Diagrams	
■ Main Control Section	Insertion
■ LCD Display and Power Supply Section	Insertion

No. 2893
Feb. 1986

www.hifiengine.com

Safety Precaution

1. The design of this product contains special hardware, many circuits and components specially for safety purposes.
   For continued protection, no changes should be made to the original design unless authorized in writing by the manufacturer. Replacement parts must be identical to those used in the original circuits. Service should be performed by qualified personnel only.
2. Alterations of the design or circuitry of the product should not be made. Any design alterations or additions will void the manufacturer's warranty and will further relieve the manufacturer of responsibility for personal injury or property damage resulting therefrom.
3. Many electrical and mechanical parts in the product have special safety-related characteristics. These characteristics are often not evident from visual inspection nor can the protection afforded by them necessarily be obtained by using replacement components rated for higher voltage, wattage, etc. Replacement parts which have these special safety characteristics are identified in the parts list of Service manual. Electrical components having such features are identified by shading on the schematics and by (⚠) on the parts list in Service manual. The use of a substitute replacement which does not have the same safety characteristics as the recommended replacement part shown in the parts list in Service manual may create shock, fire, or other hazards.
4. The leads in the products are routed and dressed with ties, clamps, tubings, barriers and/or the like to be separated from live parts, high temperature parts, moving parts and/or sharp edges for the prevention of electric shock and fire hazard.
   When service is required, the original lead routing and dress should be observed, and they should be confirmed to be returned to normal, after re-assembling.
5. Leakage current check
   (Safety for electrical shock hazard)
   After re-assembling the product, always perform an isolation check on the exposed metal parts of the Products (antenna terminals, knobs, metal cabinet, screw heads, headphone jack, control shafts, etc.) to be sure the product is safe to operate without danger of electrical shock.
   Do not use a line isolation transformer during this check.
   - Plug the AC line cord directly into the AC outlet. Using a "Leakage Current Tester", measure the leakage current from each exposed metal part of the cabinet, particularly any exposed metal part having a return path to the chassis, to a known good earth ground. Any leakage current must not exceed 0.5 mA AC (r.m.s.).
   - Alternate check method
     Plug the AC line cord directly into the AC outlet. Use an AC voltmeter having 1,000 ohms per volt or more sensitivity in the following manner. Connect a 1500 Ω 10 W resistor paralleled by a 0.15 μF AC-type capacitor between an exposed metal part and a known good earth ground.
     Measure the AC voltage across the resistor with the AC voltmeter.
     Move the resistor connection to each exposed metal part, particularly any exposed metal part having a return path to the chassis, and measure the AC voltage across the resistor. Now, reverse the plug in the AC outlet and repeat each measurement. Any voltage measured must not exceed 0.75 V AC (r.m.s.). This corresponds to 0.5 mA AC (r.m.s.).

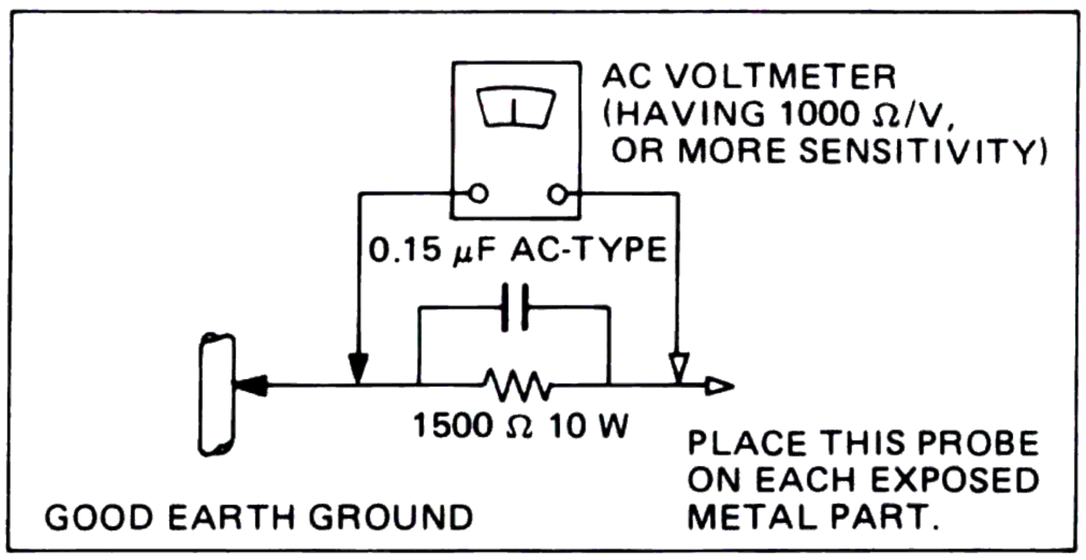

Fig. 1

CHECKING YOUR LINE VOLTAGE (For U.S. Military Market and Other Countries)

Before inserting the power plug, please check this setting to see that it corresponds with the line voltage in your area. If it doesn't, be sure to adjust the voltage selector switch to the proper setting before operating this equipment. The voltage selector switch is located on the rear panel.

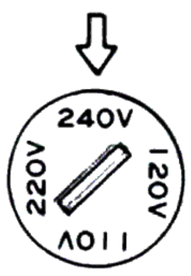

CAUTION: Before selecting the "Voltage selector switch" to proper voltage, disconnect the power plug.

www.hifiengine.com

JVC Instruction Book

COMPUTERIZED REMOTE SYSTEM CONTROLLER WITH GRAPHIC EQUALIZER

SEA-RM20BK

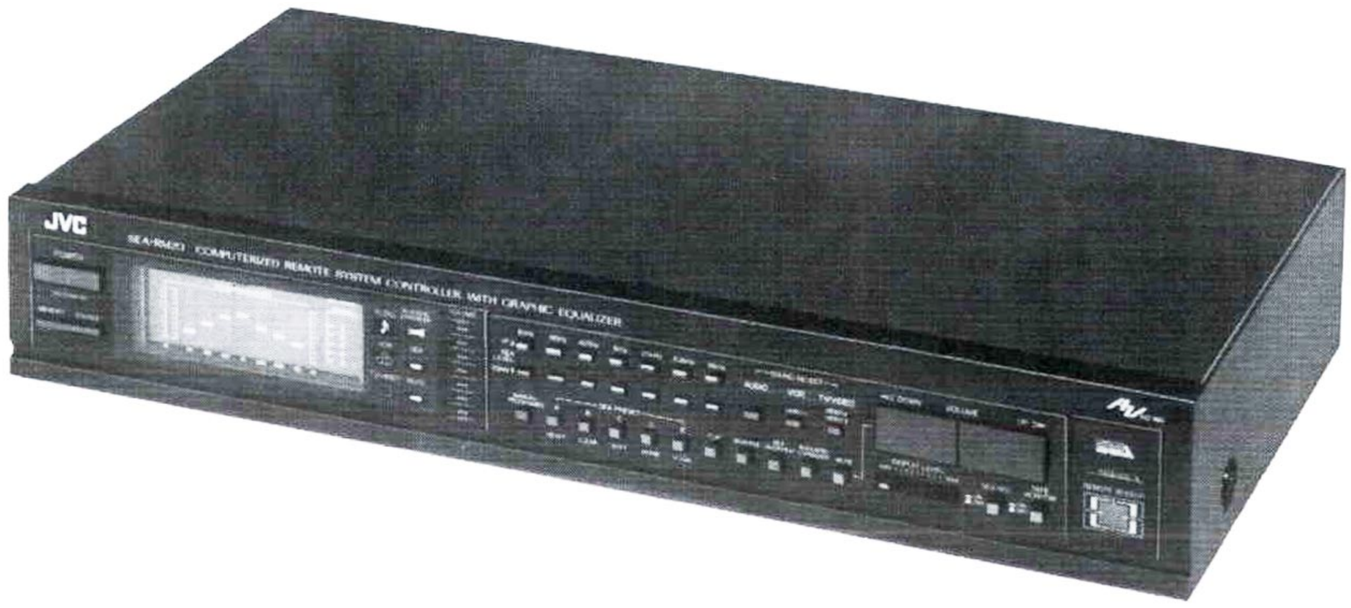

For Customer Use:

Enter below the Model No. and Serial No. which is located either on the rear, bottom or side of the cabinet. Retain this information for future reference.

Model No. _____

Serial No. _____

E30580-1293A

(No. 2893)

www.hifiengine.com

IMPORTANT (In the United Kingdom)
Mains Supply (AC 240 V∿, 50 Hz only)

IMPORTANT

Do not make any connection to the Larger Terminal coded E or Green. The wires in the mains lead are coloured in accordance with the following code:

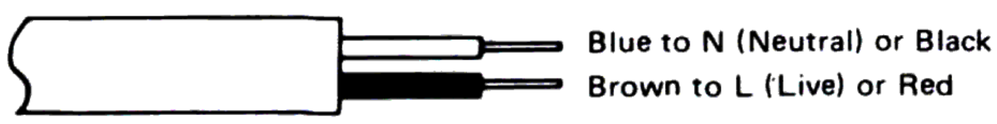

If these colours do not correspond with the terminal identifications of your plug, connect as follows:
Blue wire to terminal coded N (Neutral) or coloured Black.
Brown wire to terminal coded L (Live) or coloured Red.
If in doubt – consult a competent electrician.

BEMAERK: I stilling OFF er apparatet stadig forbundet med lysnettet hvis det ønskes fuldstændig afbrudt skal netledningen trækkes ud.

WARNING: TO REDUCE THE RISK OF FIRE OR ELECTRIC SHOCK, DO NOT EXPOSE THIS APPLIANCE TO RAIN OR MOISTURE.

The lightning flash with arrowhead symbol, within an equilateral triangle, is intended to alert the user to the presence of uninsulated "dangerous voltage" within the product's enclosure that may be of sufficient magnitude to constitute a risk of electric shock to persons.

The exclamation point within an equilateral triangle is intended to alert the user to the presence of important operating and maintenance (servicing) instructions in the literature accompanying the appliance.

IMPORTANT (CANADA ONLY/CANADA SEULEMENT)

CAUTION: TO PREVENT ELECTRIC SHOCK DO NOT USE THIS (POLARIZED) PLUG WITH AN EXTENSION CORD, RECEPTACLE OR OTHER OUTLET UNLESS THE BLADES CAN BE FULLY INSERTED TO PREVENT BLADE EXPOSURE

ATTENTION: POUR PREVENIR LES CHOCS ELECTRIQUES NE PAS UTILISER CETTE FICHE POLARISEE AVEC UN PROLONGATEUR, UNE PRISE DE COURANT OU UNE AUTRE SORTIE DE COURANT, SAUF SI LES LAMES PEUVENT ETRE INSEREES A FOND SANS EN LAISSER AUCUNE PARTIE A DECOUVERT.

CAUTION

To reduce the risk of electrical shocks, fire, etc.:
1. Do not remove screws, covers or cabinet.
2. Do not expose this appliance to rain or moisture.

Thank you for purchasing this JVC product.
Before you begin operating this unit, please read the instructions carefully to be sure you get the best possible performance.
If you have any questions, consult your JVC dealer.

CONTENTS

Important 1
Connection diagram 2
Front panel 4
Remote control unit (RM-S20) 6
Operation 8
Applications of the S.E.A. system 11
Troubleshooting 12
Specifications 13

IMPORTANT

1. Installation
- Select a place which is level, dry and neither too cold nor too hot (between -5°C and 40°C/23°F and 104°F).
- Allow for good ventilation, since poor ventilation may cause trouble.

2. Power cord
- Do not handle the power cord with wet hands!
- When unplugging from the wall outlet, always grip the plug, not the power cord itself.

(No. 2893)

www.hifiengine.com

CONNECTION DIAGRAM

Example of the connections when using with JVC COMPU LINK components

(for connection details, refer to the provided sheet.)

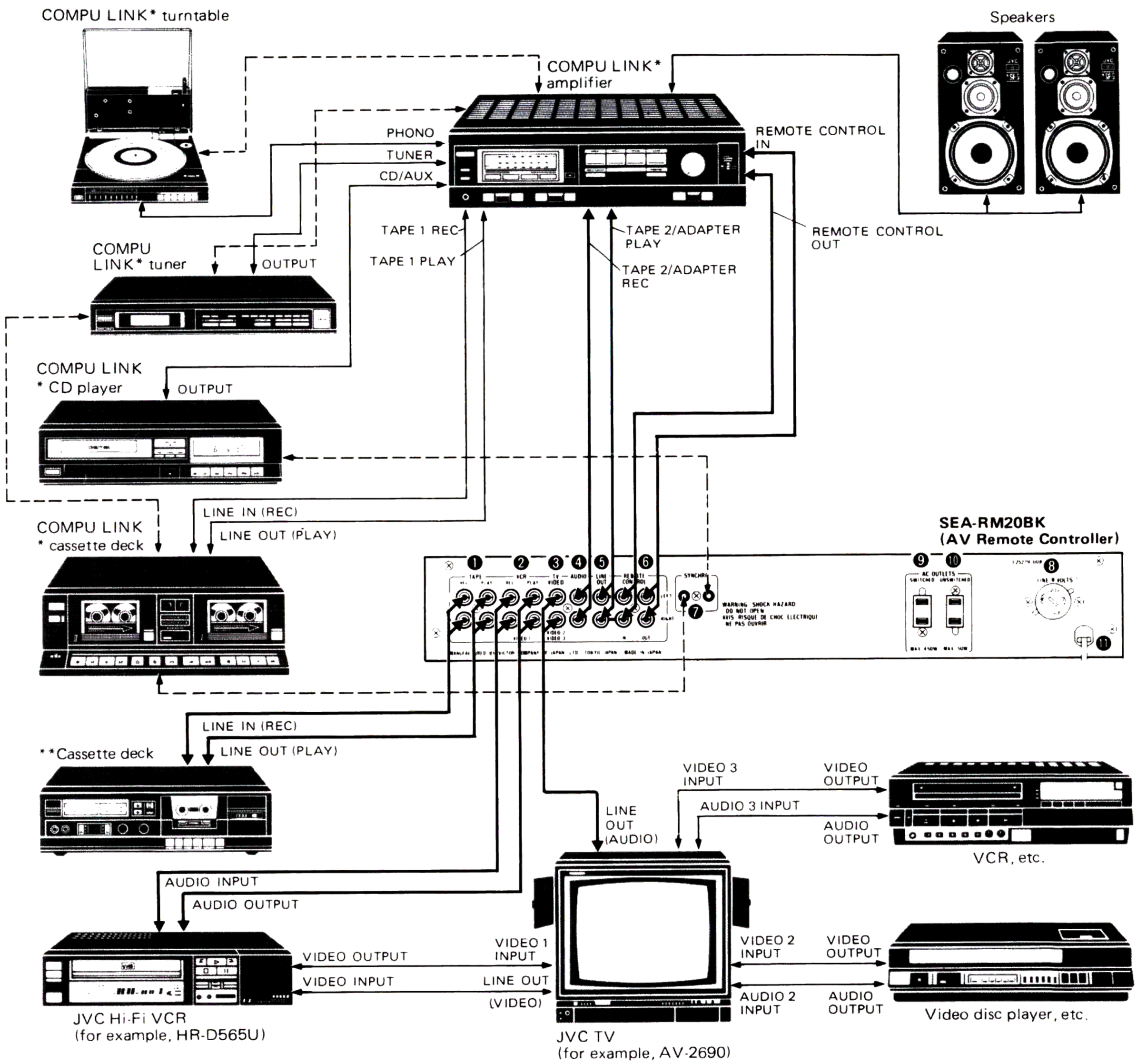

Fig. 1

Notes:

- **The equipment marked with "*" is a COMPU LINK component which has SYNCHRO terminals.**
- **◄----► is a remote cable with a 3.5 mm dia. plug.**
- **When making these connections, remove the U-shaped plugs inserted between the LINE OUT and the REMOTE CONTROL IN terminals.**
- **Do not connect the remote cable to the cassette deck marked with "**" even though it is a JVC COMPU LINK component.**

(No. 2893)

www.hifiengine.com

Example of connections when using with an ordinary amplifier

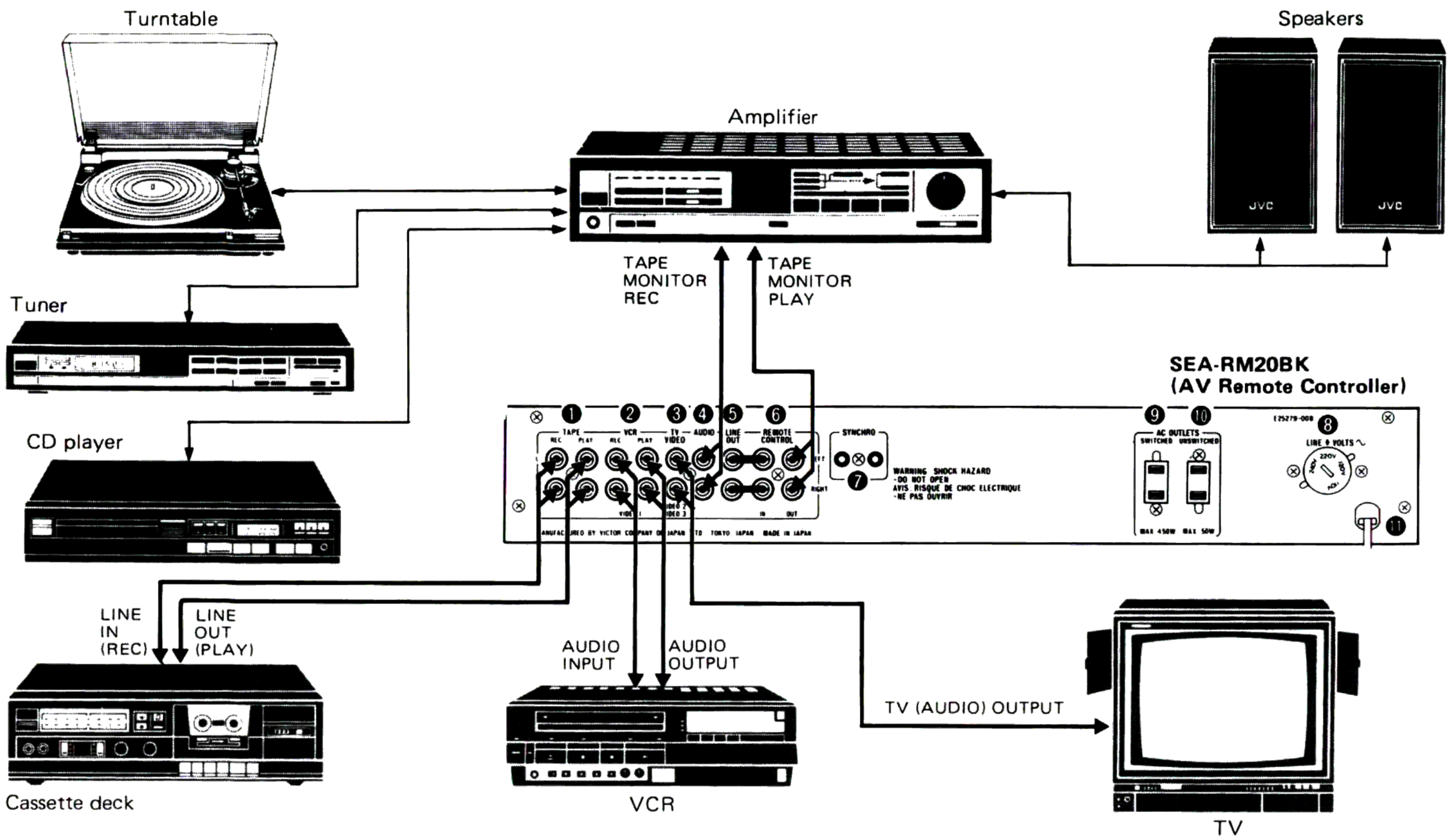

Fig. 2

❶ TAPE REC and PLAY terminals
Connect the deck's LINE IN (REC) terminals to REC, and the LINE OUT (PLAY) terminals to PLAY.

❷ VCR REC and PLAY terminals
Connect the VCR's audio input terminals to REC, and the VCR's audio output terminals to PLAY.

❸ TV/VIDEO terminals
Connect the TV's audio output terminals to these terminals.

❹ AUDIO terminals
When using the JVC COMPU LINK amplifier, connect the amplifier's TAPE 2/ADAPTER REC terminals to these terminals. (See Fig. 1.)
When using an ordinary amplifier, connect the TAPE MONITOR REC terminals of the amplifier to these terminals. (See Fig. 2.)

❺ LINE OUT terminals
When using the JVC COMPU LINK amplifier, connect the amplifier's TAPE 2/ADAPTER PLAY terminals to these terminals after removing the U-shaped plugs.
When using an ordinary amplifier, leave the U-shaped plugs connected. (See Fig. 2.)

❻ REMOTE CONTROL terminals
When using the JVC COMPU LINK amplifier, connect the amplifier's REMOTE CONTROL terminals to these terminals after removing the U-shaped plugs. (See Fig. 1.)

Note:

- **Be careful to make the correct connections, connecting IN terminals to OUT, and OUT to IN.**

When using an ordinary amplifier, connect the TAPE MONITOR PLAY terminals of the amplifier to the REMOTE CONTROL OUT terminals. (See Fig. 2.)

❼ SYNCHRO terminals
Connect the SEA-RM20BK's SYNCHRO terminals to the SYNCHRO terminals of the JVC COMPU LINK components, using the remote cables.

❽ Line voltage selector
(Not provided on units for the U.S.A., Canada, U.K., Australia, and Continental Europe.)

❾ SWITCHED AC OUTLET
Connect the component required to be switched on and off with the SEA-RM20BK.

❿ UNSWITCHED AC OUTLET
(Not provided on units for the U.K., Australia, and Continental Europe.)

⓫ Power cord

Notes:

1. **Switch the power off when connecting any component.**
2. **When connecting the components, make the correct left and right channel connections. Reversed channels may degrade the stereo effect.**
3. **Even when the power button on this unit is off, the power cord should remain connected to a wall outlet because this allows the memory circuits to continue working, maintaining the unit's previous status.**
4. **Do not connect the remote cable to the cassette deck which is connected to the TAPE REC and PLAY terminals of this unit even if it is a JVC COMPU LINK component.**
5. **When using this unit with the amplifier, be sure to press the TAPE MONITOR button of an ordinary amplifier or the TAPE 2/ADAPTER button of the JVC COMPU LINK amplifier to ON.**

(No. 2893)

www.hifiengine.com

FRONT PANEL

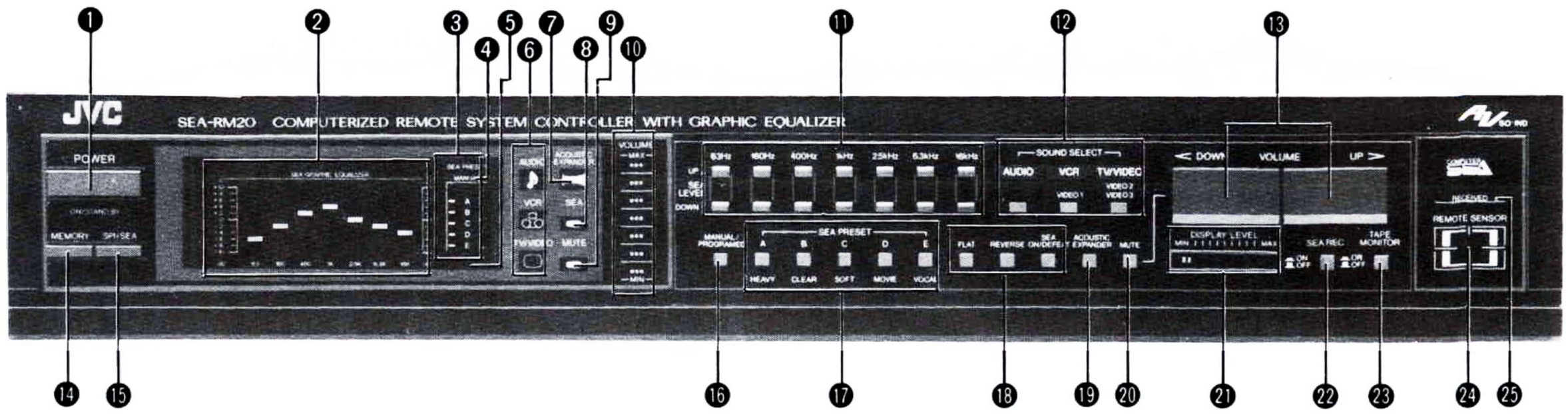

❶ POWER

To turn on the power of this unit, press this button. The display section lights and the SWITCHED AC OUTLET is turned on. To turn off the power of this unit and the SWITCHED AC OUTLET, press it again.

Note:

- **Even if the power button of this unit is turned off, it will continue to consume about 10 W of electrical power as long as the power plug is not pulled from the wall outlet. When the power button is off, the memory circuits are activated so that the previous status (including SEA MANUAL patterns) will not be interrupted. This is known as the "Stand By" mode. When the power is turned off and turned on again, the previous condition will be recalled. In addition, even if a timer is used or there is an electrical failure, or even if the power plug is pulled out, the last status will be kept for 2 – 3 days at normal room temperature. If the period exceeds this limit, the previous condition will be cancelled. If this occurs, set it again.**

❷ SPECTRO PEAK INDICATOR/SEA GRAPHIC EQUALIZER indicator

This display doubles in mode as a SPECTRO PEAK INDICATOR and SEA GRAPHIC EQUALIZER indicator, and is switched between displays by pressing the SPI/SEA button.

SPECTRO PEAK INDICATOR: The output signal levels are analyzed for 7 frequency bands, whose center frequencies are identical to those of the 7 S.E.A. bands. This SPECTRO PEAK INDICATOR shows the output signal level in each frequency band. For easier viewing, the indicator is designed so that its response time is faster when rising and slower when decaying.

SEA GRAPHIC EQUALIZER: The bar rises and falls in response to the pressing of the corresponding SEA LEVEL buttons to show the S.E.A. level in each frequency band.

Notes:

- **The SEA GRAPHIC EQUALIZER indicator is shown for about 5 seconds immediately after the power is applied.**
- **The SEA GRAPHIC EQUALIZER indicator is shown for about 5 seconds after the S.E.A. level buttons, SEA PRESET buttons, SEA FLAT button, SEA REVERSE button, MANUAL/PROGRAMED button, or MEMORY button is pressed, even if the display has been set to the SPECTRO PEAK INDICATOR mode.**

❸ SEA PRESET indicator

Pressing the MANUAL/PROGRAMED button will cause indicator A, B, C, D, or E to light, according to which preset pattern was being used the last time the unit was in that particular mode (MANUAL or PROGRAMED). If no preset pattern was being used, no PRESET indicator will light. These indicators also light when an SEA PRESET button has been pressed, to select a preset pattern or to store a newly-created pattern in memory.

This indicator lights in both modes, SEA GRAPHIC EQUALIZER and SPECTRO PEAK INDICATOR and goes out when the SEA LEVEL UP/DOWN button, the FLAT button, or REVERSE button is pressed.

❹ MANUAL/PROGRAMED indicator

Pressing the MANUAL/PROGRAMED button causes "MANUAL" or "PROGRAMED" to light on the display, indicating which mode has been selected.

❺ MEMORY indicator

Pressing the MEMORY button lights "MEMORY" for about 5 seconds, thus indicating the unit is ready to store in memory the pattern you have created.

❻ Pictorial source display

This lights to show which source has been selected.

❼ ACOUSTIC EXPANDER indicator

This indicator lights when the ACOUSTIC EXPANDER button has been pressed to ON.

❽ SEA indicator

This indicator lights when the SEA ON/DEFEAT button has been pressed to ON.

❾ MUTE indicator

This indicator lights when the MUTE button has been pressed to ON.

❿ VOLUME indicator

This indicator shows the level of the output signal from the REMOTE CONTROL OUT terminals, and may be adjusted by pressing the VOLUME UP/DOWN buttons.

⓫ SEA LEVEL

The built-in graphic equalizer divides the audio spectrum into 7 frequency bands with center frequencies from 63 Hz to 16 kHz at intervals of 4/3 octave.

When the S.E.A. level is set to '0' (center position), frequency response is flat. The response in each band can be varied by ±10 dB by pressing the UP or DOWN SEA LEVEL buttons.

www.hifiengine.com

The buttons for different frequency bands can be pressed at the same time, and holding them down causes the level to continue rising or falling.

63 Hz: Raise to emphasize the very low bass response of organs, drums, and contrabass. It produces stable and solid sound with emphasis and eliminates the unclear sound response of low frequencies with de-emphasis.

160 Hz: Emphasize to obtain a more expanded low sound. De-emphasize to eliminate unclear sound caused by large or near empty listening rooms.

400 Hz: This frequency range is the base on which music is constructed. Emphasize to really put a punch in your music.

1 kHz: Most effective in emphasizing or de-emphasizing the human voice. Emphasize to cause the vocalist to be brought to the foreground, or de-emphasize to cause it to recede into the background.

2.5 kHz: This frequency stimulates the human ear. If the music sounds hard or metallic, de-emphasize.

8 kHz: Boost to add clarity to winds and strings. This frequency band varies the tonal expression, influencing the subtleties of the music.

16 kHz: Boosting this frequency range properly adds to the delicacy of highs, with cymbals and triangles resounding in a more ear-pleasing manner, and provides a feeling of extension. This frequency band can also be used to compensate for cartridge response since most moving-magnet cartridges have their resonance peaks in the frequency range from 10 kHz to 20 kHz.

⓬ SOUND SELECT

AUDIO: Press to hear or record sound from the unit connected to the AUDIO terminals.

VCR: Press to hear or record sound from the VCR connected to the VCR terminals.

TV/VIDEO: Press to hear or record sound from the TV connected to the TV/VIDEO terminals.

⓭ VOLUME UP/DOWN

Adjust the level of the output signal from the REMOTE CONTROL OUT terminals. Press the UP button once to increase the volume by one step, and the DOWN buton once to decrease it by one step; this level is shown by the VOLUME indicator. Holding down one of these buttons will cause the volume to progressively rise or fall.

⓮ MEMORY

Press this button and the MEMORY indicator will light for about 5 seconds. While it is lit, press one of the SEA PRESET buttons to store in memory the S.E.A. pattern currently being displayed.

⓯ SPI/SEA

Press to switch the indication between the SPECTRO PEAK INDICATOR mode and SEA GRAPHIC EQUALIZER indicator mode.

⓰ MANUAL/PROGRAMED

Press to switch between the MANUAL and PROGRAMED SEA pattern modes.

⓱ SEA PRESET

Press to store the displayed S.E.A. pattern in memory or to recall the preset S.E.A. pattern corresponding to the button pressed. While in the MANUAL mode, pressing the MEMORY button and then one of these 5 buttons will store the patterns you have created. Later, while in MANUAL mode, that pattern can be recalled by pressing the appropriate SEA PRESET button. Up to 5 original patterns can be stored for recall in this way.

A different set of S.E.A. patterns is available when in the PROGRAMED mode. These 5 patterns (HEAVY, CLEAR, SOFT, MOVIE and VOCAL) have been permanently stored in memory before the unit was shipped, and may not be replaced. So, up to 10 patterns may be recalled. For more details, refer to page 8.

⓲ SEA buttons

FLAT: Press this button for a flat response.

REVERSE: Press this button to reverse the pattern's characteristics.

SEA ON/DEFEAT: Press this button, and the SEA indicator will light and the sound will be S.E.A. compensated. Press it again, and the SEA indicator will go out and S.E.A. circuit will be bypassed. This function is convenient for checking the S.E.A.-compensated signal, and for comparing it with the original sound.

⓳ ACOUSTIC EXPANDER

Press this button, and the ACOUSTIC EXPANDER indicator will light and a monaural signal will be given a stereo effect. When applied to a stereo signal, an even more dramatic stereo effect results.

⓴ MUTE

Press this button, and the MUTE indicator will light and the sound will be instantaneously muted. Pressing it again returns the volume to its original level. Pressing the VOLUME UP/DOWN button also cancels the muting.

㉑ DISPLAY LEVEL

Adjusts the relative display position on the SPECTRO PEAK INDICATOR so that especially weak or strong level signals can be displayed in an easy-to-see position. This volume has no effect on the output sound level.

㉒ SEA REC

ON (▬): To record S.E.A.-compensated signals on the cassette deck connected to the TAPE terminals of this unit.

OFF (▙): To have the sound recorded on tapes bypass the S.E.A. circuit. If this button is set to ON, press it again to set to OFF.

㉓ TAPE MONITOR

ON (▬): Set to this position to listen to the cassette deck connected to the TAPE terminals of this unit. If your cassette deck is of the three-head type, you can monitor the recorded sound while recording by setting this button to ON.

OFF (▙): Keep this button set to this position, except when you want to listen to the cassette deck connected to the TAPE terminals of this unit.

㉔ REMOTE SENSOR

This sensor receives infrared signals from the remote control unit (RM-S20).

㉕ RECEIVED indicator

While infrared signals are being received from the remote control unit, this indicator lights.

www.hifiengine.com

REMOTE CONTROL UNIT (RM-S20)

Point the front of the remote control unit at the remote control sensor on the SEA-RM20BK, the VCR or TV set and then press the buttons.

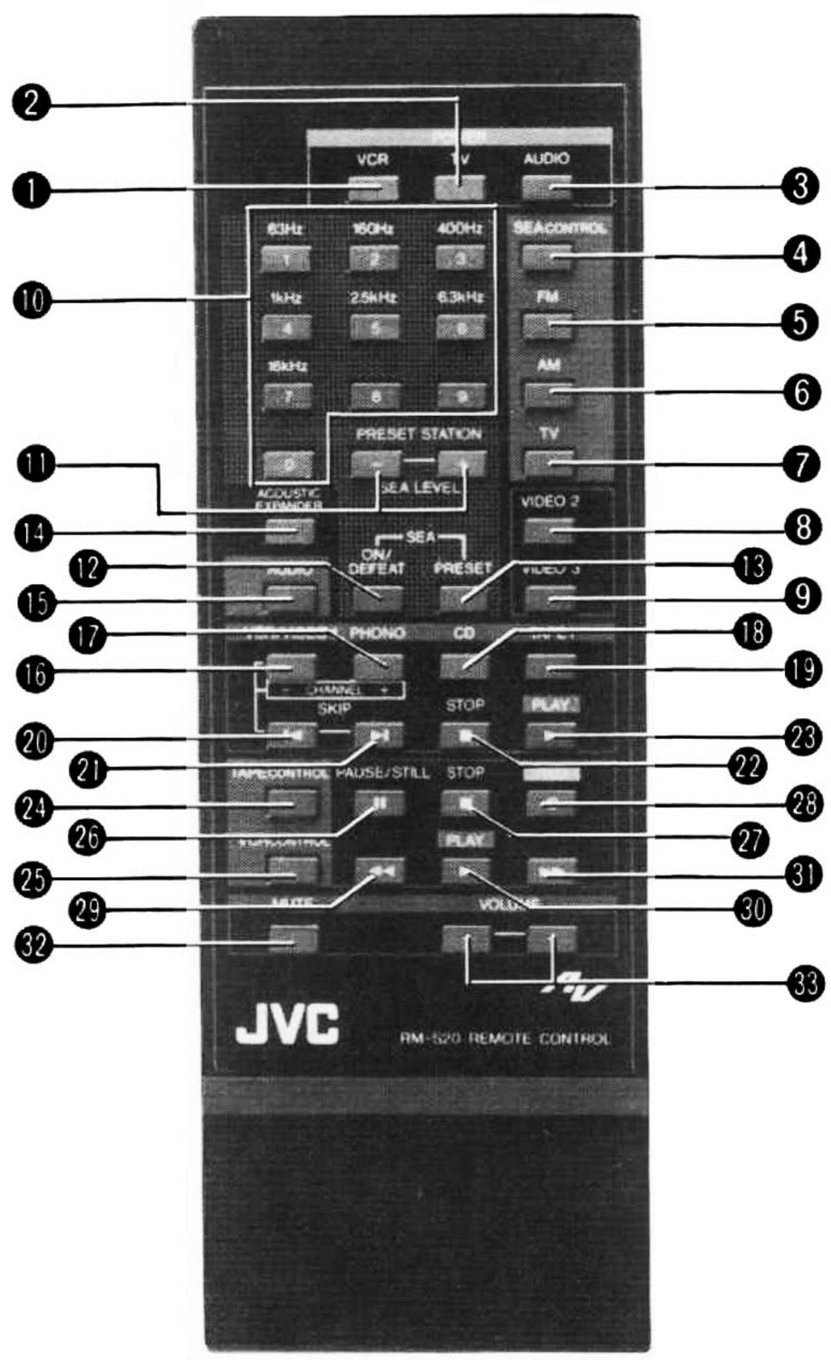

This explanation is applicable only when you use this unit in combination with audio components which have SYNCHRO terminals (COMPU LINK components) and a JVC TV (e.g. AV-2690) or VCR (e.g. HR-D565U). Otherwise, the components may not operate correctly. Before using the COMPU LINK components, make sure to connect each component with the remote cables and signal cords.

❶ VCR (POWER)
For use with the VCR. Press this button to switch the power on or off.

❷ TV (POWER)
For use with the TV. Press this button to switch the TV's power on or off.

❸ AUDIO (POWER)
Press this button to switch this unit's power on or off, and to turn on or off the SWITCHED AC OUTLET.

❹ SEA CONTROL
Press this button before adjusting the S.E.A. graphic equalizer using the equalizer control buttons.

❺ FM
Press this button to listen to an FM broadcast.

❻ AM
Press this button to listen to an AM broadcast.

❼ TV
Press this button to watch the TV connected to the TV/VIDEO terminals.

❽, ❾ VIDEO 2/VIDEO 3
These buttons correspond to the external INPUT terminals on the TV set labeled VIDEO 2 or VIDEO 3.
To watch the video equipment connected to these two pairs of terminals, press one of these two buttons so that the input signal from the TV/VIDEO terminals can be selected easily.

❿ S.E.A. graphic equalizer control buttons/Buttons for direct access to FM/AM presets or TV channels
Once the SEA CONTROL button has been pressed, a particular frequency band can be chosen for adjustment with the SEA LEVEL buttons.
When the FM or AM button has been pressed, these buttons can be used to select the preset station by pressing the preset station number. For example, to select preset station number 1, press button "0", then "1" or press "1" and wait for about 4 seconds.
When the TV button has been pressed, these buttons can be used to select a TV channel.

⓫ PRESET STATION/SEA LEVEL
When the SEA CONTROL button has been pressed, these buttons can be used to adjust the S.E.A. level of the frequency band selected by the S.E.A. graphic equalizer control buttons.
When the FM, AM, or TV button has been pressed, a preset station or TV channel can be selected by using these buttons to sequentially scan the available stations or channels in either direction.

⓬ SEA ON/DEFEAT
Press this button to activate or defeat the S.E.A. compensation circuit.

⓭ SEA PRESET
Press this button to select an S.E.A. preset pattern. Each time this button is pressed, the preset pattern the equalizer is set to successively changes in this order: MANUAL A – B – C – D – E – PROGRAMED A – B – C – D – E, then returns to the MANUAL A again.

⓮ ACOUSTIC EXPANDER
Press this button to switch the acoustic expander function on or off.

⓯ AUDIO
Press this button to select the source connected to the AUDIO terminals.

Source selectors

⓰ VCR/VIDEO 1
Press to listen to the VCR connected to the VCR terminals and select the external input "VIDEO 1" on the TV set at the same time.

⓱ PHONO
Press to listen to a record.

⓲ CD
Press to listen to a compact disc.

⓳ TAPE 1
Press to listen to a cassette tape.

www.hifiengine.com

Operation buttons for the compact disc player/turntable/cassette deck/VCR, as selected by the source selectors

⑳ , ㉑ CHANNEL/SKIP (- CHANNEL +/SKIP (⏮ , ⏭))

Press these buttons to skip tracks on compact discs, search for selections on cassette tapes, and change channels on the VCR's tuner.

Notes:

- **These buttons have no effect for the turntable.**
- **If these buttons are used with cassette decks not equipped with a music scan function, they will have no effect. However, when the TD-X201J cassette deck is connected, these buttons are able to function as rewind and fast forward buttons.**

㉒ STOP (■)

Press this button to stop playing the compact disc player, cassette deck, turntable, or VCR.

㉓ PLAY (▶)

Press this button to start playing the compact disc player, cassette deck, turntable, or VCR.

Operation buttons for the cassette deck/VCR selected by the TAPE CONTROL or VCR CONTROL

㉔ TAPE CONTROL

Press this button to operate the cassette deck connected to the TAPE 1 terminals of the COMPU LINK amplifier.

㉕ VCR CONTROL

Press this button to operate the VCR connected to the VCR terminals.

㉖ PAUSE/STILL (❚❚)

Press this button to pause during playback or recording. To release this function, press the PLAY button.

㉗ STOP (■)

Press this button to stop operation.

㉘ REC (○)

Press this button and the PLAY button simultaneously to record with the cassette deck or VCR.

㉙ (◀◀)

For the cassette deck: Press this button to quickly wind the tape from the right to left reel.

For the VCR: Press this button to take the VCR from the stop mode to the rewind mode. During playback, press this button for high-speed playback in the reverse direction (Shuttle search).

㉚ PLAY (▶)

Press this button to play a tape.

㉛ (▶▶)

For the cassette deck: Press this button to quickly wind the tape from the left to right reel.

For the VCR: Press this button to take the VCR from the stop mode to the fast forward mode. During playback, press this button for high-speed playback in the forward direction (Shuttle search).

㉜ MUTE

Press this button to instantly mute the sound, and press it again to return the sound to its original volume. Pressing the VOLUME buttons also cancels the muting.

㉝ VOLUME

Press the "+" side to increase the volume and the "–" side to decrease it.

Battery

- **How to install the batteries**

1. Slide the cover of the battery case in the direction of the arrow to remove it.
2. Install the provided batteries (UM-3), with their polarities properly placed.
3. Re-install the cover of the battery case.

- **Battery life**

The batteries can be used for an average of 1 year.

- **Battery replacement time**

When the distance at which the remote control unit functions begins to decrease, replace both batteries (AA-size: UM-3, R6, 1.5 V).

- **How to operate the remote control unit**

When the remote control unit is directly in front of the remote sensor of this unit and is directed toward it, the remote control unit may be used from as far away as seven meters. But, when it is being used from a position far to one side or the other, this distance will be shortened.

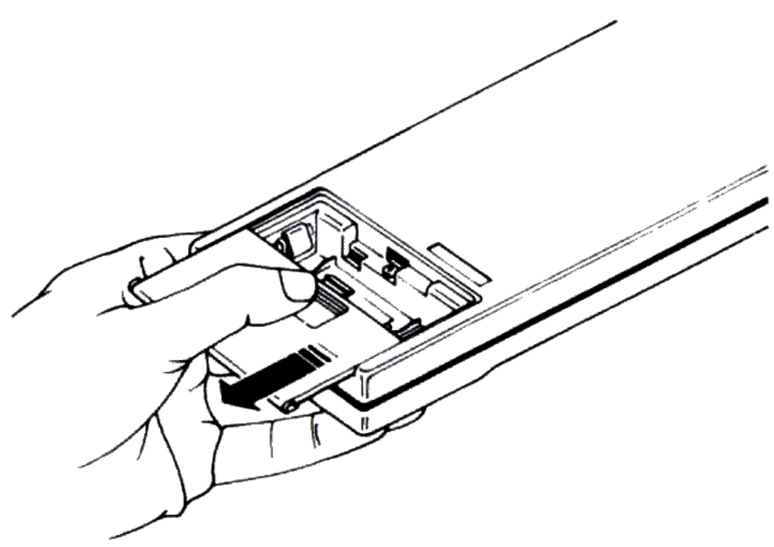

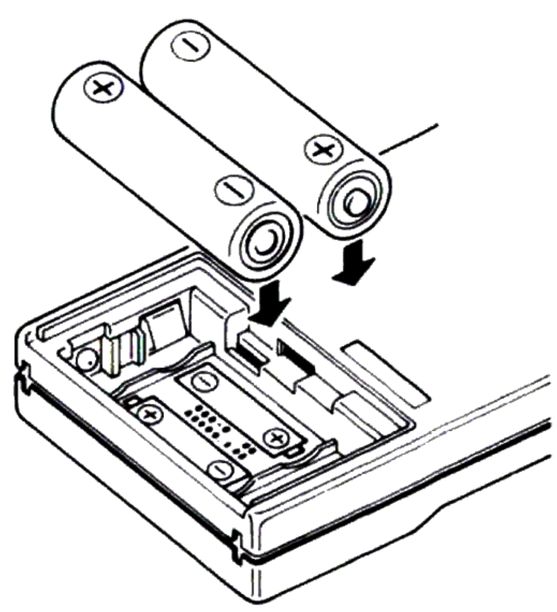

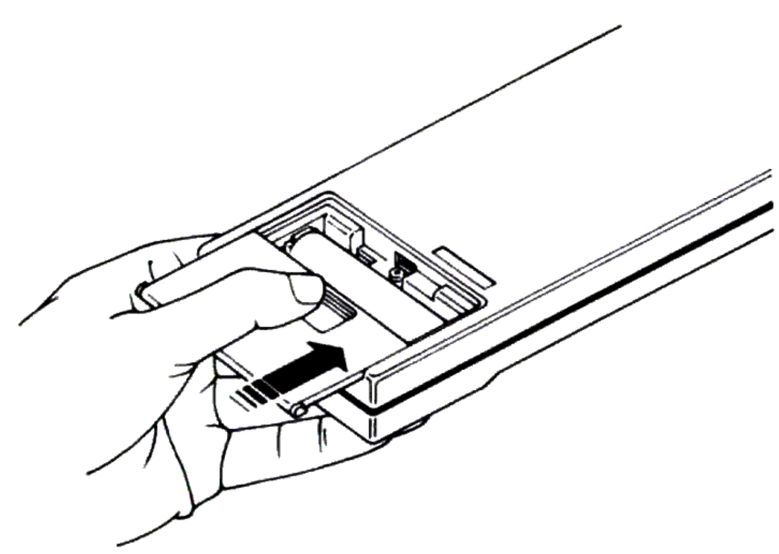

www.hifiengine.com

• How to use the provided connection bar

When using the RM-S20 with a compatibly-designed remote control unit of a TV or other component, connect the two units with the connection bar as follows.

Notes:

- **For safety, remove the bar when the units are separated.**
- **To protect yourself from the connection bar's exposed edges, remove the bar from the unit after draping it with a cloth.**

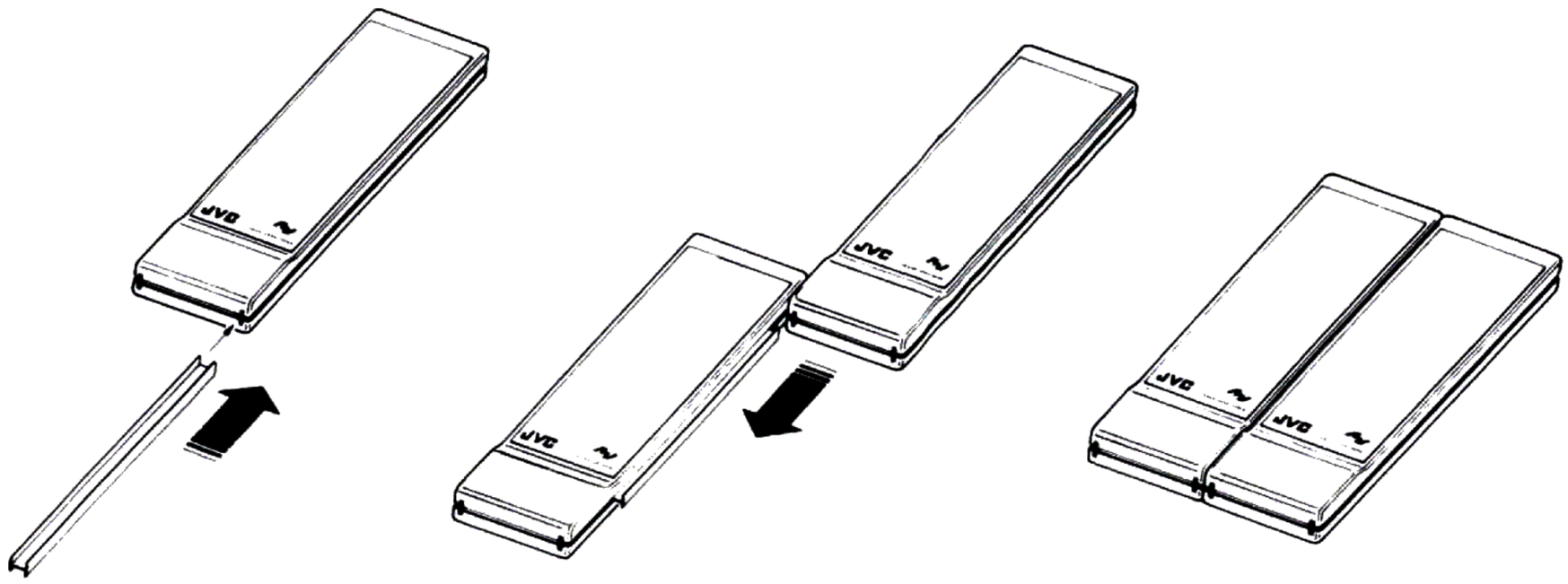

OPERATION

How to set the volume

(When a JVC COMPU LINK amplifier is connected to this unit.)

1. Press the VOLUME UP button of this unit to set the volume to MAX.
2. Select the desired source and set the volume of the amplifier louder than the optimum level. This level is then the maximum volume level selectable with this unit. Then adjust the volume to the desired level with the VOLUME UP/DOWN buttons.

Note:

- **Even when connecting an ordinary amplifier as shown in Fig. 2, the volume can be adjusted by the VOLUME controls of this unit.**

How to listen to broadcasts, records, compact discs or tapes (input through the AUDIO terminals)

Refer to the provided GUIDE TO OPERATE THE REMOTE CONTROL UNIT (RM-S20) and the instruction book of each unit.

How to listen to tapes connected to the TAPE terminals of this unit

Set the TAPE MONITOR button of this unit to on.

Note:

- **When the SEA REC button is set to on, the S.E.A. effect cannot be applied to the sound from the tape.**

How to listen to and watch the TV or VCR

Refer to the provided GUIDE TO OPERATE THE REMOTE CONTROL UNIT (RM-S20) and the instruction book of each unit.

S.E.A. pattern memory

For your own sound compensation and processing, you can use the 10 PROGRAMED and MANUAL preset S.E.A. patterns.

PROGRAMED

These 5 S.E.A. patterns were preset at the factory to offer suggested settings for various types of audio programs. Each preset pattern is shown below. After recalling these patterns, you can further change each frequency band to suit yourself. However, since they are representative patterns, the original, stored patterns will be unchanged.

HEAVY (PROGRAMED A)

Used for music with a heavy beat, such as rock music. Low frequencies are emphasized to produce a deeper, more powerful sound. Higher frequencies are also emphasized to enhance and bring clarity to the highs, including the percussive notes.

CLEAR (PROGRAMED B)

For crisp, clear sound with transparent highs. The low and middle frequencies that tend to be unclear are de-emphasized, and the middle and high frequencies that strengthen the vocal component of the music are emphasized.

SOFT (PROGRAMED C)

For background music or lower volume levels. The very low frequencies, which need boosting at low volume levels, are emphasized, and the stimulating effect of higher frequencies is diminished by de-emphasizing high frequencies.

MOVIE (PROGRAMED D)

For TV, VCR, and videodisc sound. The low and high frequencies, which are usually of insufficient strength in the sound of these sources, are emphasized to produce a balanced, deeper sound. Also, the excessive brightness that is characteristic of these sources' sound is cut back by de-emphasizing the middle frequency band.

VOCAL (PROGRAMED E)

For music that is chiefly vocal, or speech. The middle frequencies, which carry the human voice, are emphasized, while surrounding frequencies are reduced. To accent the higher vocal notes, the highest frequencies are also boosted.

MANUAL

These 5 S.E.A. pattern memories are provided to allow you to create, store, and recall up to 5 S.E.A. patterns.

To store the S.E.A. pattern in memory, proceed as follows:

1. Set the S.E.A. pattern using the SEA LEVEL UP/DOWN buttons. This will cause the MANUAL indicator to light, if it has not been lit already.
2. Press the MEMORY button. The MEMORY indicator will light for 5 seconds.
3. During this period, press the appropriate SEA PRESET button to store the pattern in memory. The SEA PRESET indicator corresponding to the button just pressed will light, and the MEMORY indicator will go off.

www.hifiengine.com

How to record

Operation

●Recording the source of the amplifier connected to the AUDIO terminals of the SEA-RM20BK

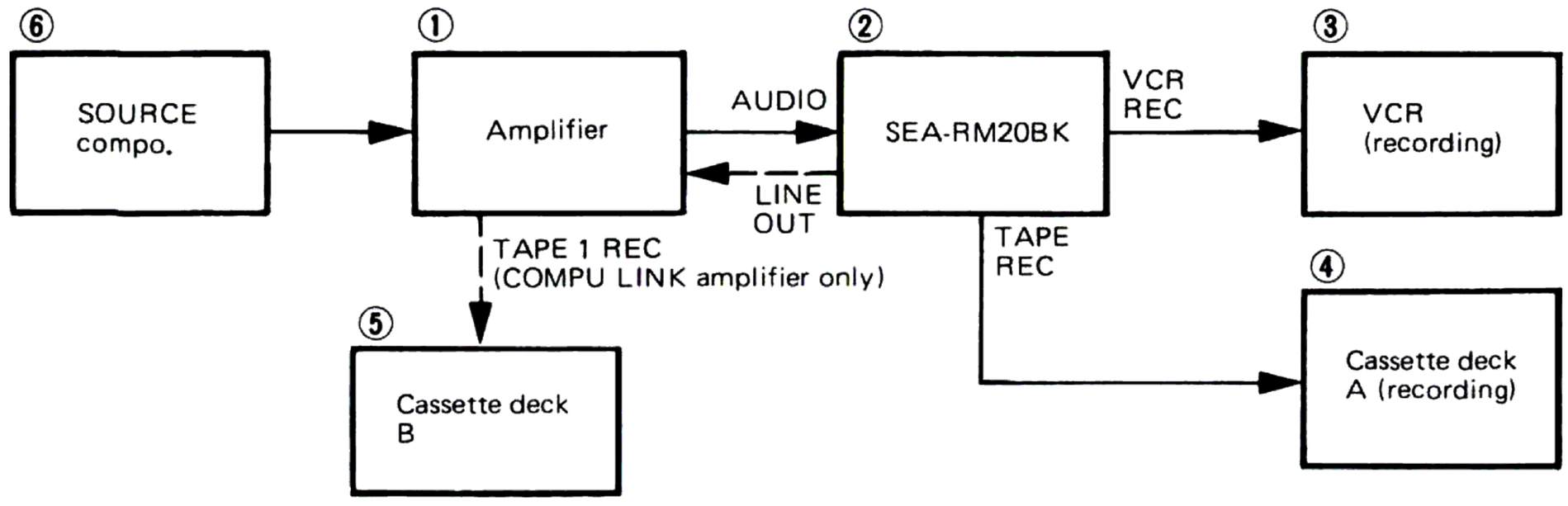

① Select the source which you want to record by switching the source selector of the amplifier connected to the AUDIO terminals of the SEA-RM20BK.

② If you want to record onto the VCR or cassette deck B with S.E.A. effect, set the S.E.A. pattern as required and press the SEA ON/DEFEAT button to on. In this case, the S.E.A. effect is to be applied on the LINE OUT signal and VCR REC signal, and the SEA REC button has no effect on the LINE OUT and VCR REC signals. When recording onto cassette deck A, the SEA REC button should also be pressed when you want to record with the S.E.A. effect.

③ To record onto the VCR connected to the VCR REC terminals of the SEA-RM20BK, operate the VCR for recording.

④ To record onto the cassette deck connected to the TAPE REC terminals of the SEA-RM20BK, operate the deck for recording.

⑤ To record onto the cassette deck connected to the TAPE 1 REC terminals of the JVC COMPU LINK amplifier, operate the deck for recording.

⑥ Operate the source component to begin playback.

●Recording from the cassette deck connected to the TAPE PLAY terminals of the SEA-RM20BK

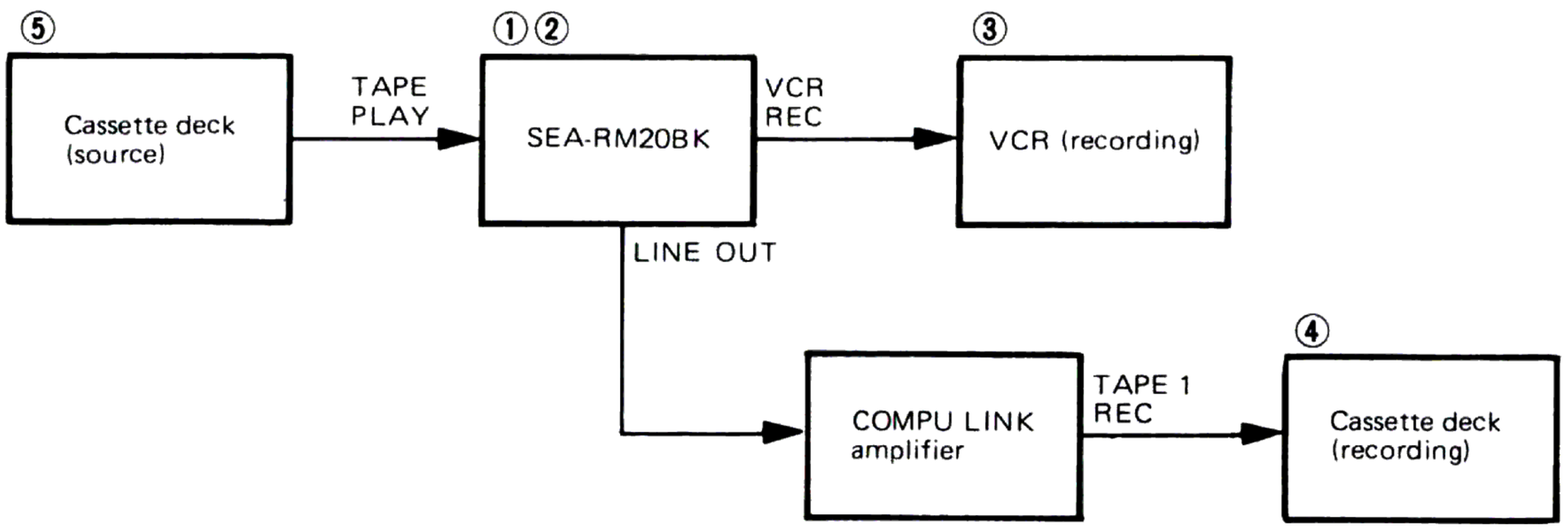

① Press the TAPE MONITOR button to on.

② If you want to record onto the VCR or cassette deck with the S.E.A. effect, set the S.E.A. pattern as required and press the SEA ON/DEFEAT button to on and SEA REC button to off. In this case, the S.E.A. effect is applied to the LINE OUT signal and VCR REC signal.

Note:

If the SEA REC button has been turned on, the SEA effect is not applied to the LINE OUT and VCR REC signal.

③ To record onto the VCR connected to the VCR REC terminals of the SEA-RM20BK, operate the VCR for recording.

④ To record onto the cassette deck connected to the TAPE-1 REC terminals of the JVC COMPU LINK amplifier, operate the deck for recording.

⑤ Operate the source cassette deck to play.

www.hifiengine.com

● Recording from the VCR connected to the VCR PLAY terminals of the SEA-RM20BK

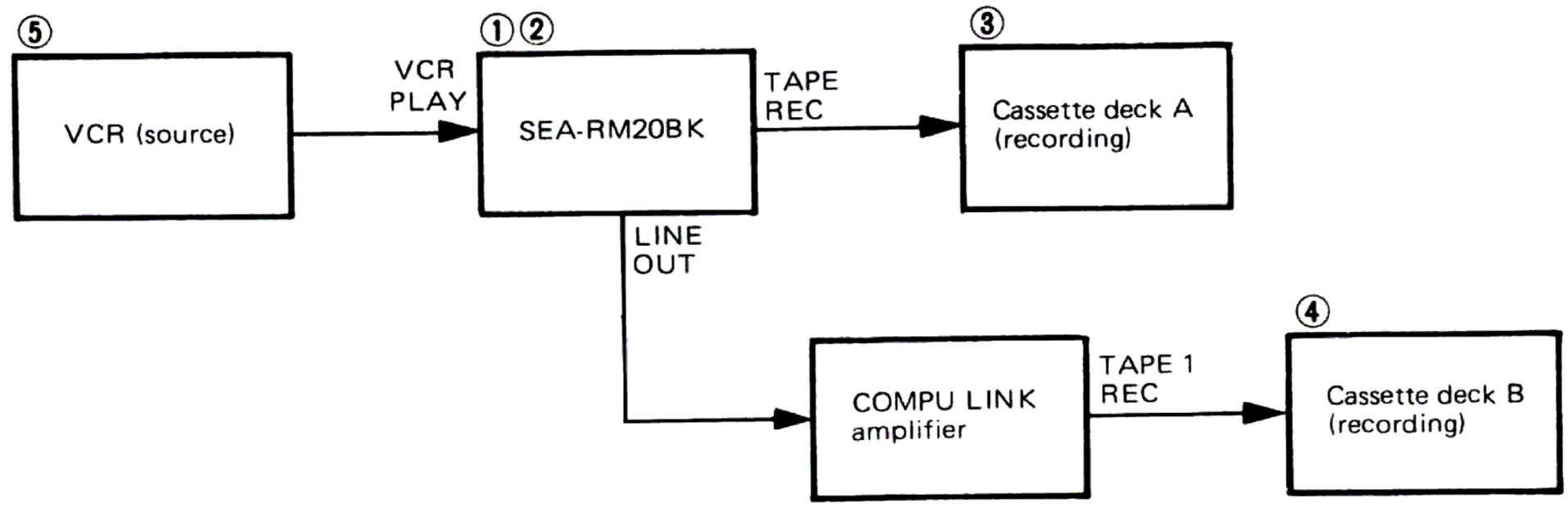

① Press the VCR button of the SEA-RM20BK to on.
② If you want to record onto cassette deck B with the S.E.A. effect, set the S.E.A. pattern as required and press the SEA ON/DEFEAT button to ON. In this case, the S.E.A. effect is applied to the LINE OUT signal, and the SEA REC button has no effect on the LINE OUT signal. For recording onto cassette deck A, the SEA REC button should also be pressed when you want to record with the S.E.A. effect.
③ To record onto the cassette deck connected to the TAPE REC terminals of the SEA-RM20BK, operate the deck for recording.
④ To record onto the cassette deck connected to the TAPE-1 REC terminals of the JVC COMPU LINK amplifier, operate the deck for recording.
⑤ Operate the source VCR to begin playback.

● Recording from the TV set connected to the TV/VIDEO terminals of the SEA-RM20BK

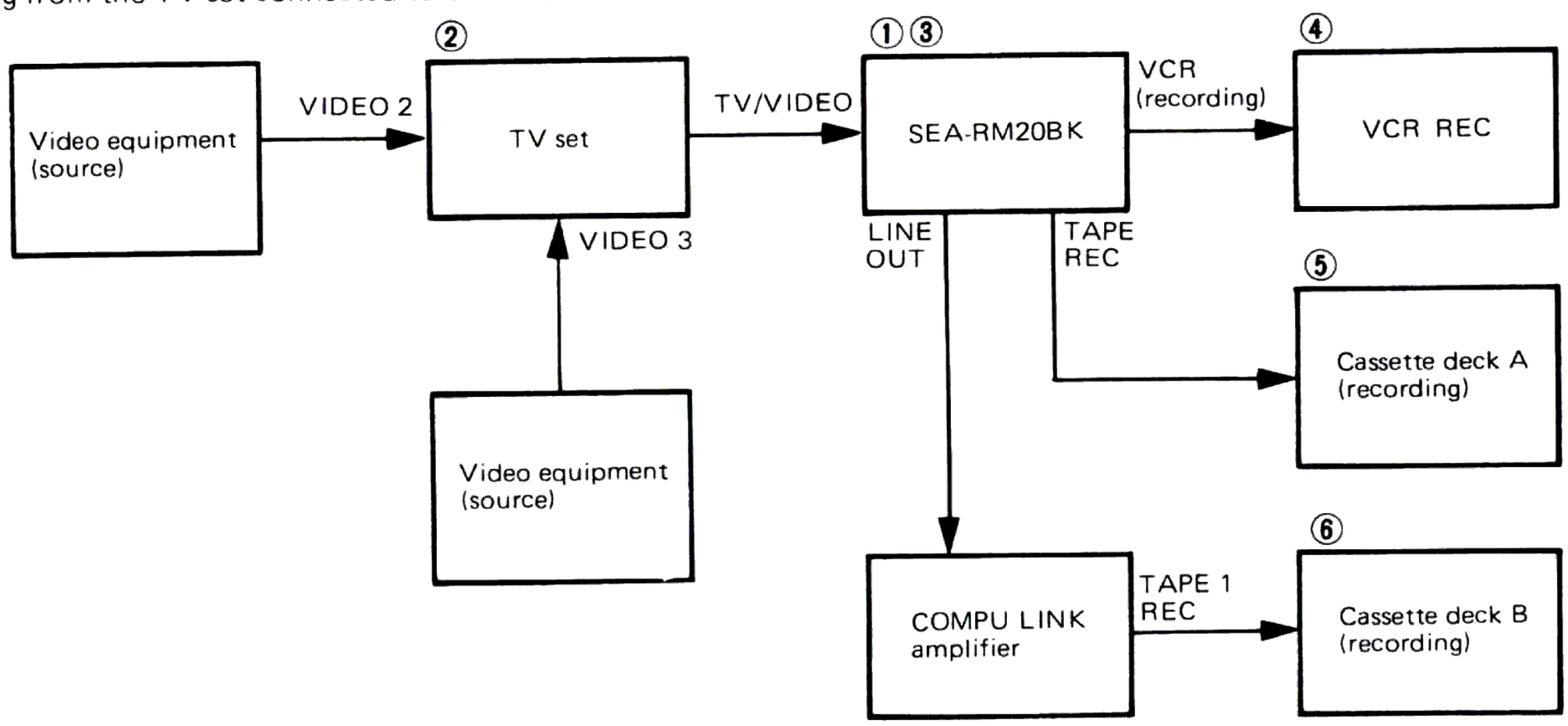

① Press the TV/VIDEO button of the SEA-RM20BK to on.
② Select the source which you want to record by switching the source selector of the TV set connected to the TV/VIDEO terminals of the SEA-RM20BK.
③ If you want to record onto the VCR or cassette deck B with the S.E.A. effect, set the S.E.A. pattern as required and press the SEA ON/DEFEAT button to on. In this case, the S.E.A. effect is applied to the LINE OUT signal and VCR REC signal, and the SEA REC button has no effect on the LINE OUT and VCR REC signals. To record onto cassette deck A, the SEA REC button should also be pressed when you want to record with the S.E.A. effect.
④ To record onto the VCR connected to the VCR REC terminals of the SEA-RM20BK, operate the VCR for recording.
⑤ For recording onto the cassette deck connected to the TAPE REC terminals of the SEA-RM20BK, operate the deck for recording.
⑥ To record onto the cassette deck connected to the TAPE 1 REC terminals of the JVC COMPU LINK amplifier, operate the deck for recording.
⑦ Operate the source component to begin playback.

Notes:

- **If you are using a three-head tape deck connected to the TAPE terminals of the SEA-RM20BK to record, the just-recorded sound may be monitored while you are recording by pressing the TAPE MONITOR button.**
- **Pressing the VOLUME buttons during recording will not affect the recording level.**
- **During recording, do not press the ACOUSTIC EXPANDER button. Pressing it could cause a scratch noise to be recorded.**

www.hifiengine.com

S.E.A. recording
The S.E.A. graphic equalizer tailors the sound to your own particular taste or compensates for room acoustics or system characteristics, as described below.

APPLICATIONS OF THE S.E.A. SYSTEM

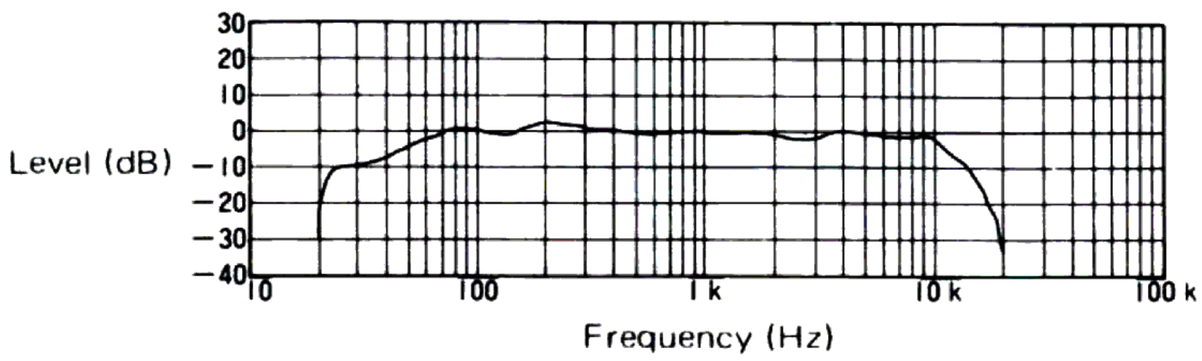

Example of frequency response of a room

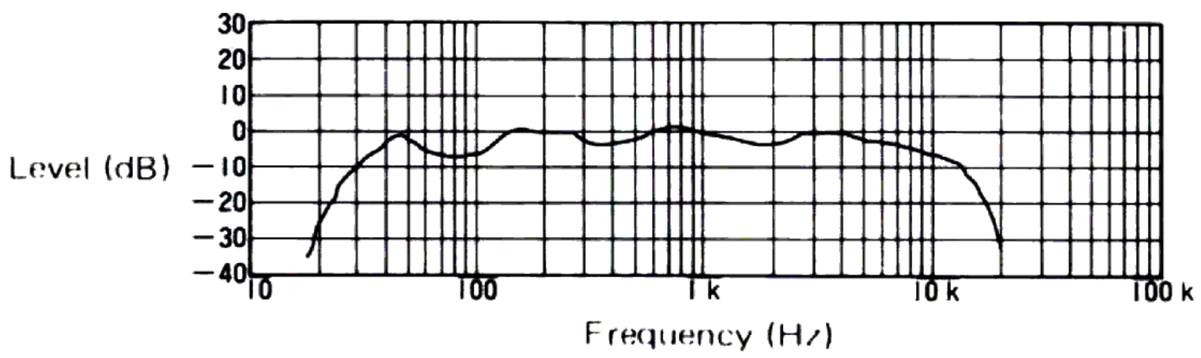

Example of frequency response of a large room

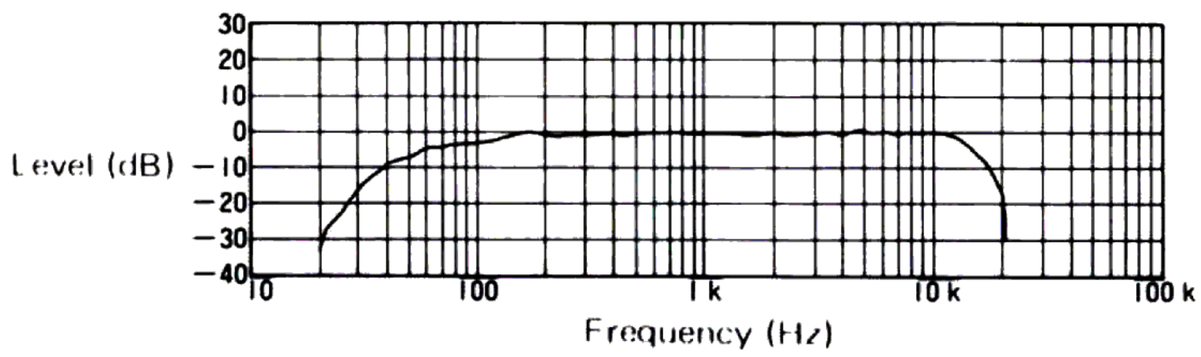

Example of frequency response of a room with little echo

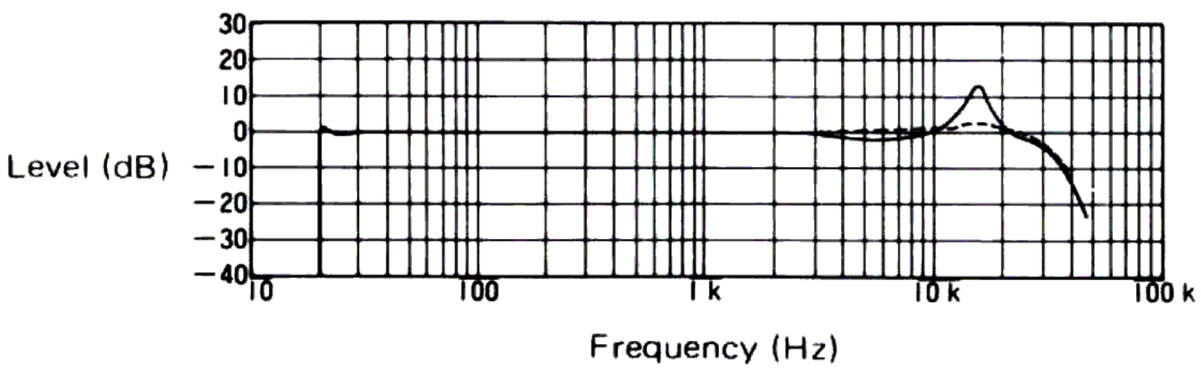

Example of cartridge response (The dotted line (. . . .) indicates the response after compensation.)

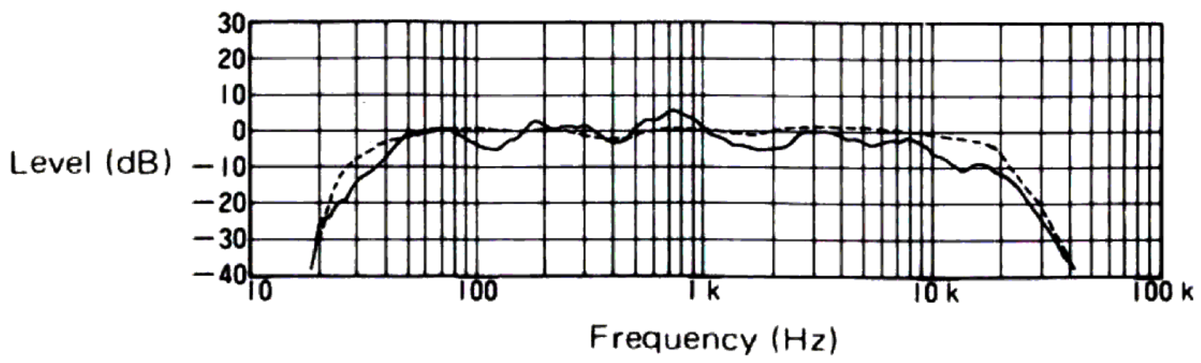

Example of speaker reproduction response (The dotted line (. . . .) indicates the response after compensation.)

Compensation for room acoustics
The frequency response of a listening room varies depending on the room's shape or furnishings, and the position of the listener in the room. Each listening position in the room provides the listener with a different set of frequency responses, as a result of different degrees of reverberation, reflection, echo, and absorption affecting each frequency.
The S.E.A. system can function to make the sound response of a room flat by emphasizing those frequencies having a high degree of absorption and de-emphasizing those frequencies having a high degree of reflection.
The frequency ranges affected by 'absorption' and 'reflection' are narrow, therefore, it is only necessary to compensate the corresponding frequency band.
Since conventional tone control systems simply adjust the highs and lows centered around the 1 kHz frequency, they are both imprecise and incomplete.
The SEA-RM20BK monitors and equalizes 7 separate audio frequency bands, thus allowing you to make the necessary adjustments in the precisely appropriate frequency bands in order to compensate for the acoustic response of a room and any listening position in it.

Compensation for reproduction responses of cartridges and speakers
The S.E.A. graphic equalizer's allowance for minute adjustments within narrow frequency bands makes it ideal for correcting frequency deficiencies of phono cartridges and speakers.
Almost all moving-magnet cartridges have response curve peaks between 10 kHz and 20 kHz.
The S.E.A. graphic equalizer allows you to produce a flat reproduction of their response.
The S.E.A. graphic equalizer can compensate for attenuated response below 100 Hz, a characteristic peculiar to airtight speaker enclosures, by adjusting the 63 Hz button. It can also compensate for an obscure vocal by de-emphasizing the 2.5 kHz band and emphasizing the 400 Hz and 1 kHz bands.
Also, for mid- and high-range horn type speakers, the S.E.A. system can eliminate harsh, grating sounds by de-emphasizing the 6.3 kHz band.

Wide-range compensation
The S.E.A. graphic equalizer lets you adjust response curves by ±10 dB, thus allowing you to compensate for relatively great variations in response.

Loudness control and noise filter capability
The response of the SEA-RM20BK ensures that the most suitable loudness control and noise filter capabilities can be obtained, even if these controls are not provided by the amplifier.

www.hifiengine.com

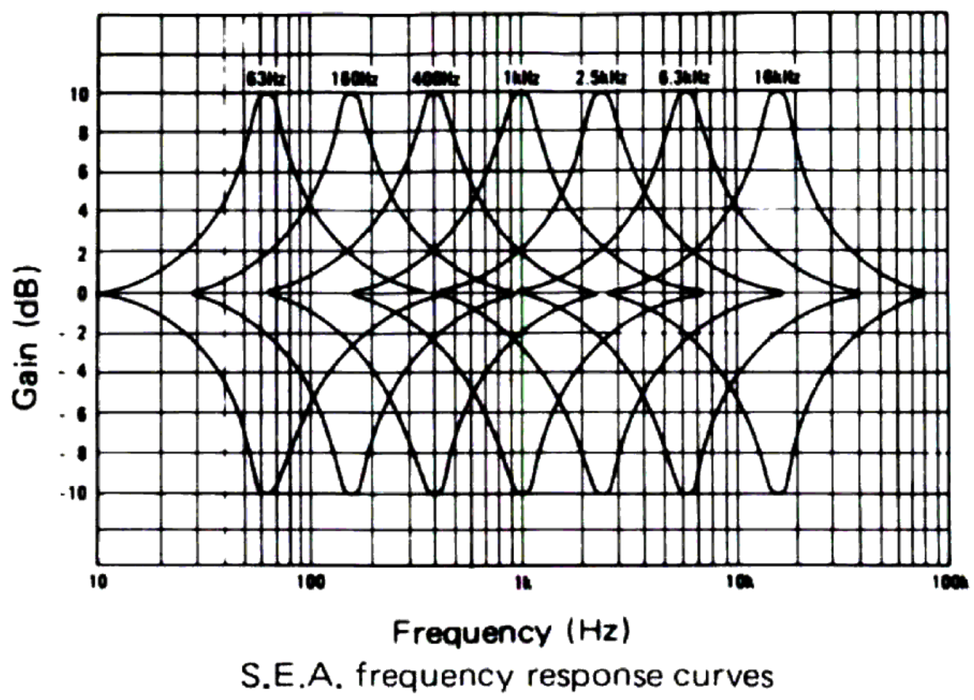

S.E.A. frequency response curves

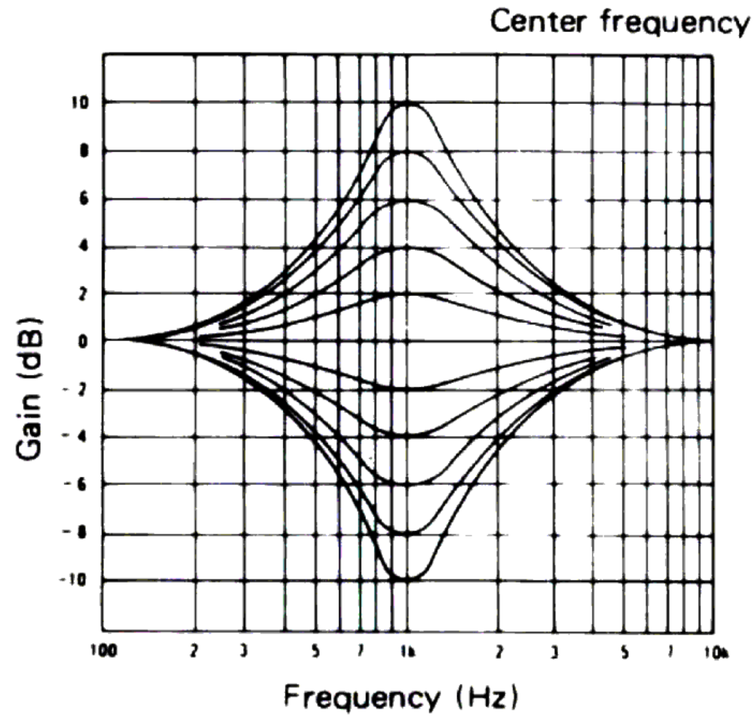

S.E.A. gain settings

Custom sound processing

When a studio recording is made, the sound signals are processed to produce sound that is unique to a particular group or orchestra. With the SEA-RM20BK, you can do this at home – producing sound tailored exactly to your tastes by emphasizing or de-emphasizing various parts of the music.

Sound control without side-effects

Tone control systems that simply rely on bass and treble controls usually boost not only the audible low and high frequency bands, but also boost frequencies outside of the audible frequency range. This tends to increase turntable rumble in the low range and noise in the high range.

With the SEA-RM20BK, however, only the audible frequency bands are adjusted, thus making it a sound control system without harmful side-effects.

TROUBLESHOOTING

What appears to be a malfunction may not always be serious. Make sure first . . . .

- **No sound and no illumination**

  Is the AC plug connected properly?

- **No sound at all**

  Are the connections made properly?

  – See page 2 or 3 and the provided connection example sheet.

  Is the TAPE MONITOR button set to OFF?

  – The TAPE MONITOR button should be OFF except when you are listening to tapes.

- **S.E.A. effect is not applied to the source.**

  Is the SEA ON/DEFEAT button set to ON?

  – If not, set it to ON.

  Is the TAPE MONITOR button of an ordinary amplifier or the TAPE 2/ADAPTER button of the COMPU LINK amplifier set to ON?

  – Set it to ON when using this unit with the amplifier.

- **COMPU LINK components do not operate correctly.**

  Are they connected correctly with the remote cable and the signal cord?

- **The remote control unit (RM-S20) does not work.**

  Are the batteries of the remote control unit installed with their polarities correctly placed?

  Are the batteries exhausted?

  – Replace them with new ones.

www.hifiengine.com

SPECIFICATIONS

Input section

Input impedance

AUDIO	: 45 kohms
VCR	: 45 kohms
TV/VIDEO	: 45 kohms
TAPE MONITOR	: 47 kohms
REMOTE CONTROL IN	: 45 kohms

Output section

Output impedance

LINE OUT	: 1.2 kohms
TAPE REC (SEA REC ON)	: 1.2 kohms
VCR REC	: 1.2 kohms
REMOTE CONTROL OUT	: 250 ohms
Rated output	: 1 V RMS (S.E.A. system flat)
Max. output	: 4.5 V RMS with 1 kHz, 0.5 % THD (S.E.A. system flat)
Total harmonic distortion	: 0.03 % (20 Hz – 20 kHz, rated output) 0.008 % (1 kHz, rated output)
Gain	: 0 ±1 dB (S.E.A. system flat and volume max.)
Frequency response	: 10 Hz – 50 kHz (+0, -2 dB) (S.E.A. system flat)
Signal-to-noise ratio	: 100 dB (at rated output, IHF A-network short-circuited)

Control section

Center frequencies	: 63 Hz, 160 Hz, 400 Hz, 1 kHz, 2.5 kHz, 6.3 kHz, 16 kHz
Control range	: +10 dB ±1 dB, -10 dB ±1 dB

General

Dimensions	: 435(W) x 77(H) x 225(D) mm (17-3/16" x 3-1/16" x 8-7/8")
Weight	: 2.6 kg (5.7 lbs.)

Design and specifications subject to change without notice.

POWER SPECIFICATIONS

Areas	Line Voltage & Frequency	Power Consumption
U.S.A.	AC 120 V∿, 60 Hz	26 watts
Canada		
Continental Europe	AC 220 V∿, 50 Hz	
U.K.	AC 240 V∿, 50 Hz	
Australia		
Other areas	AC 110/120/220/240 V∿ selectable, 50/60 Hz	

(No. 2893)

www.hifiengine.com

Block Diagram

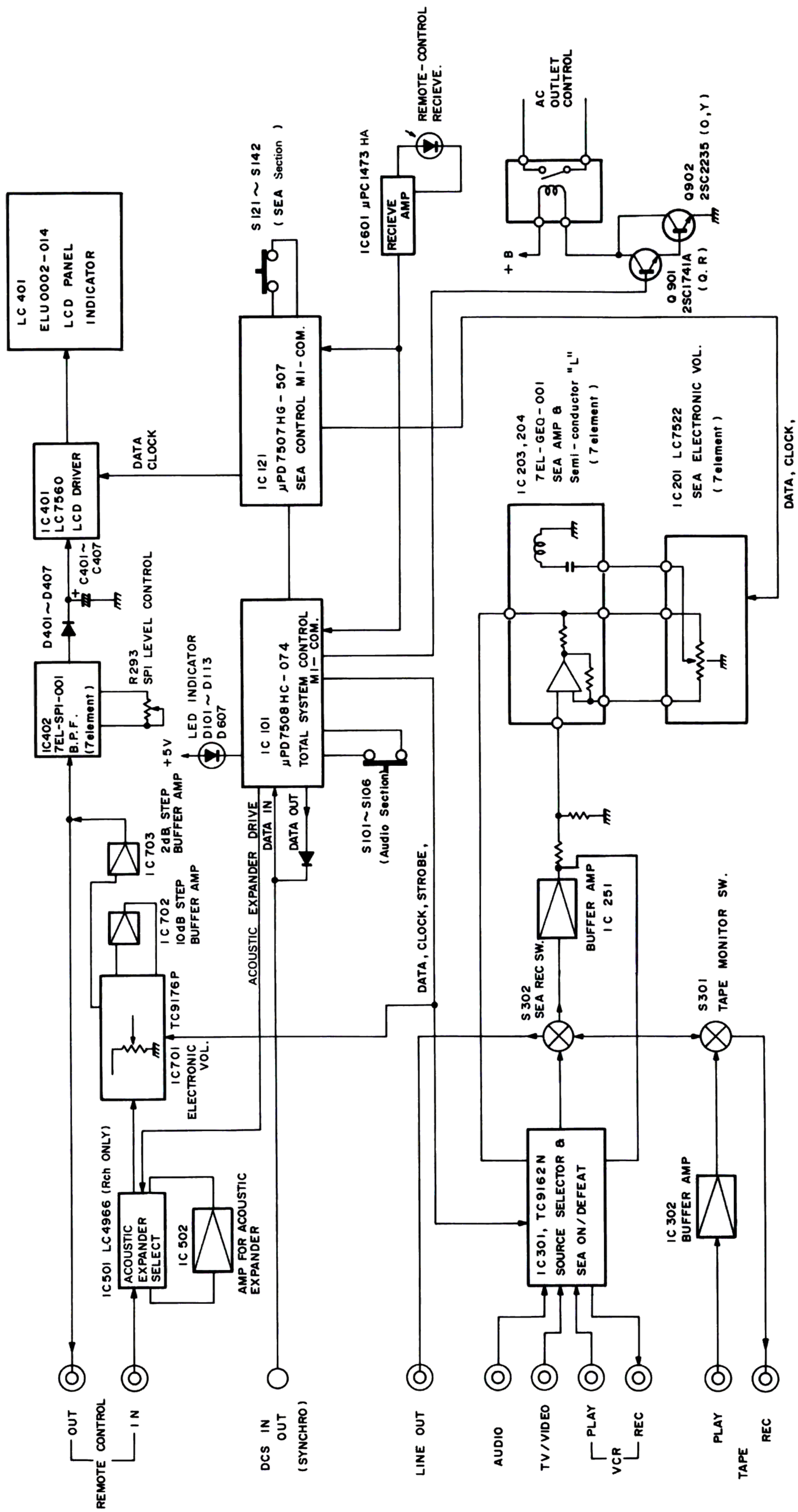

www.hifiengine.com

Technical Explanations

Among the various LSI's adopted on this model, explanations are made in this Section especially on the two types of LSI's assigned to SEA control by the computer. These two LSI's are LC7522 (Symbol No. IC201) and LC7560 (Symbol No. IC401).

■ Terminal Layout Diagram

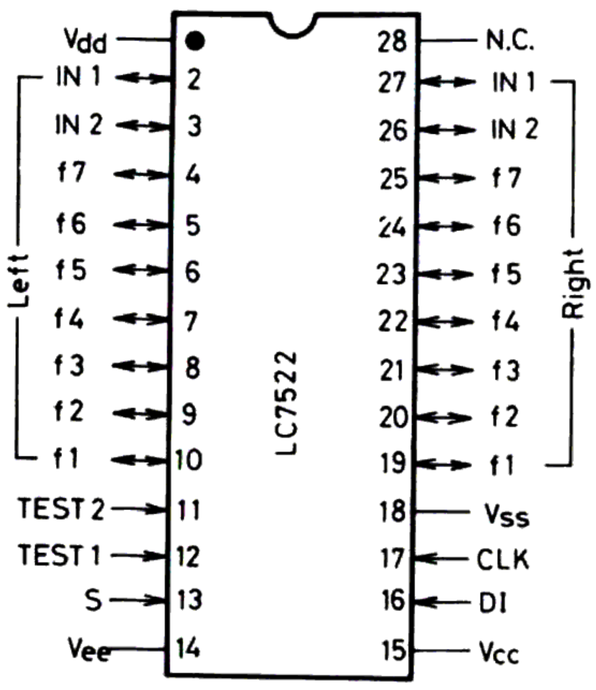

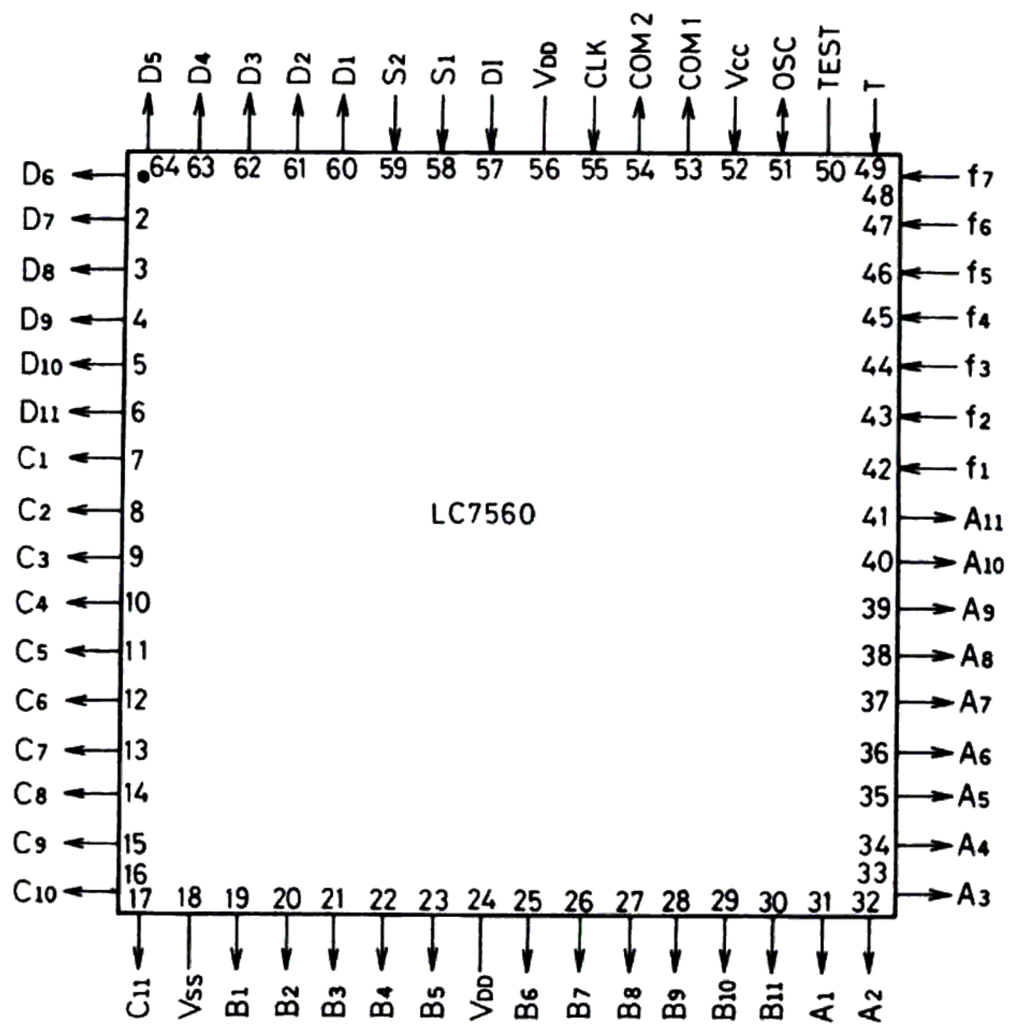

■ Interior Block Diagram

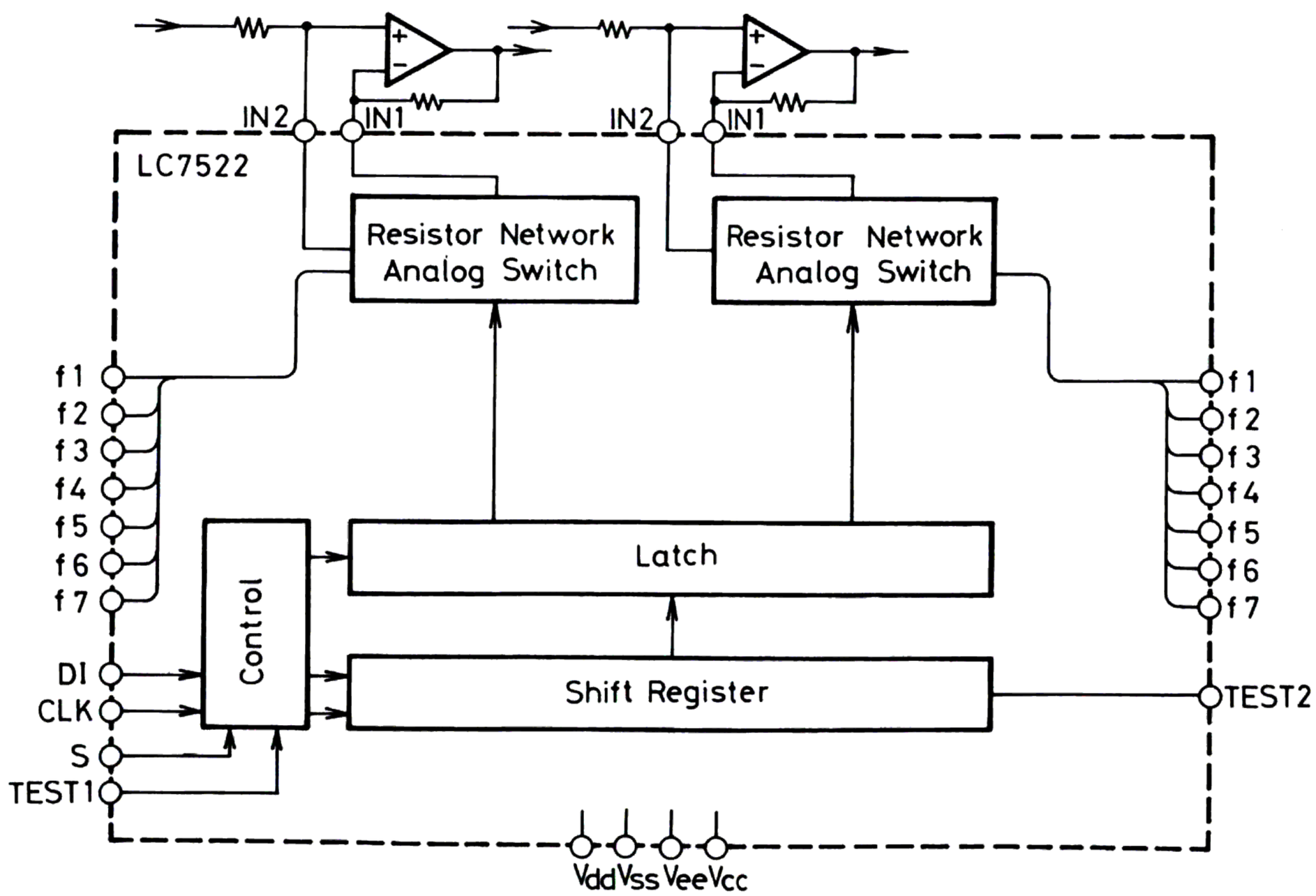

www.hifiengine.com

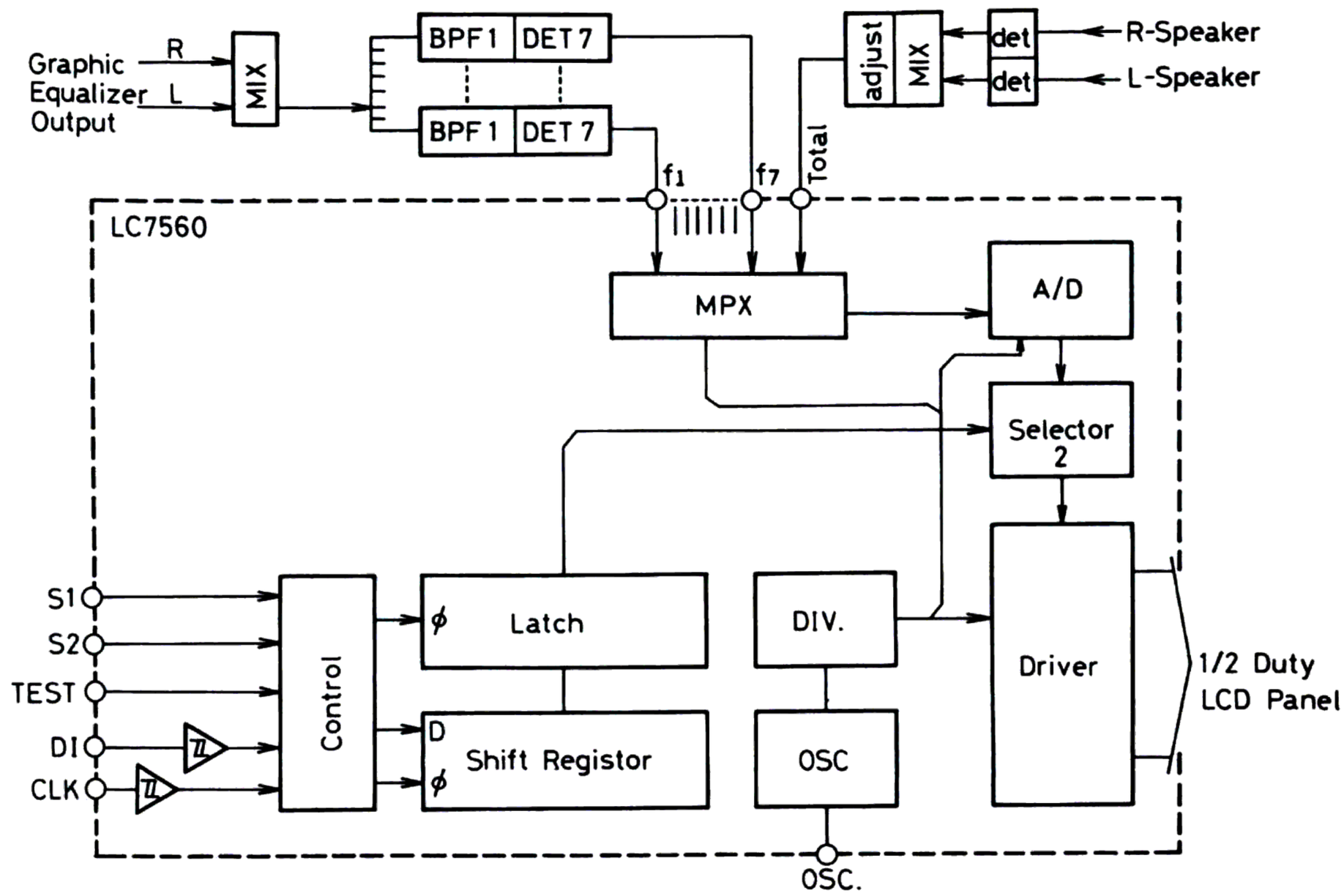

■ Explanation of Each Terminal

LC7522 (Graphic Equalizer) C-MOS LSI, 7 bands, right-side/left-side independent, ±2 dB step, ±10 dB variable

Name	Terminal No.	Terminal type	Explanation
V_{DD}	1	—	Power supply terminal, +7 V Power supply for voice signals
V_{CC}	15		Power supply terminal, +5 V Power supply for logic drive
V_{SS}	18		Power supply terminal, 0 V
V_{EE}	14		Power supply terminal, −7 V Power supply for voice signals
DI	16	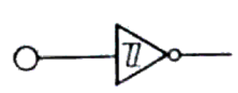	Terminal for data input from CPU Schmitt inverter type
CLK	17		Terminal for clock input from CPU Schmitt inverter type
GND	–	—	Voice-signal system GND
IN1	2, 27	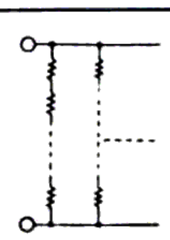	Input terminal for voice signals IN1 to be connected to OP amplifier inversion input
IN2	3, 26		IN2 to be connected to OP amplifier noninversion input Provided both on right side and on left side
$f_1 \sim f_7$	10 ~ 4 19 ~ 25	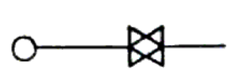	Connection terminal for band filter $f_1 \sim f_7$ x right side/left side Total 14 terminals
S	13	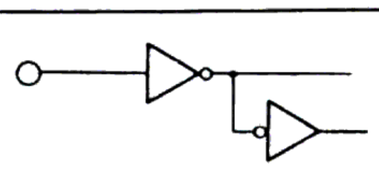	Select terminal when 2 chips are used Key code: 7C3 under "1" input → Connect to V_{DD}. Key code: 7C2 under "0" input → Connect to V_{EE}.

www.hifiengine.com

LC7560 (LCD Display Driver) C-MOS LSI, 7 bands, ±2 dB step, 11-point display

Name	Terminal No.	Terminal type	Explanation
V_{DD}	24 56	—	Power supply terminal, +13 V Power supply for A/D conversion
V_{CC}	52		Power supply terminal, +5 V Power supply for logic drive
V_{SS}	18		Power supply terminal, 0 V
DI	57		Terminal for data input from CPU Schmitt inverter type
CLK	55		Terminal for clock input from CPU Schmitt inverter type
COM1 COM2	53 54	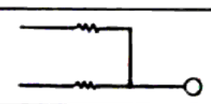	Output terminal to LCD common
$A_1 \sim A_{11}$	31 ~ 41	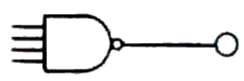	Output terminal to LCD segment For bands f_1 and f_2
$B_1 \sim B_{11}$	19 ~ 30		Output terminal to LCD segment For bands f_3 and f_4
$C_1 \sim C_{11}$	7 ~ 17		Output terminal to LCD segment For bands f_5 and f_6
$D_1 \sim D_{11}$	60 ~ 64 1 ~ 6		Output terminal to LCD segment For band f_7 and total display
$f_1 \sim f_7$	42 ~ 48	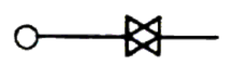	Input terminal for voice signal detection output
T	49		Input terminal for total display Inputs signal detection output
OSC	51	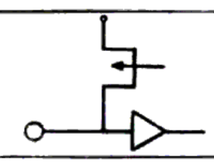	Open-drain-type output buffer Connection terminal of exterior-mounted CR for oscillator
S1	58	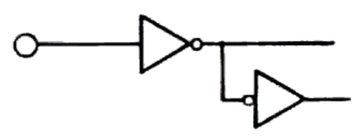	Select terminal when a plural number of chips is used (max. 4 chips)
S2	59		

S1	S2	Key Code
1	1	FB
0	1	FA
1	0	F9
0	0	F8

■ Data Transmission through Synchro Terminal

As the synchro terminal has a common bus line to other equipment to be connected externally, data of the both can be mutually exchanged according to the transmission method shown below.

■ Data transmission

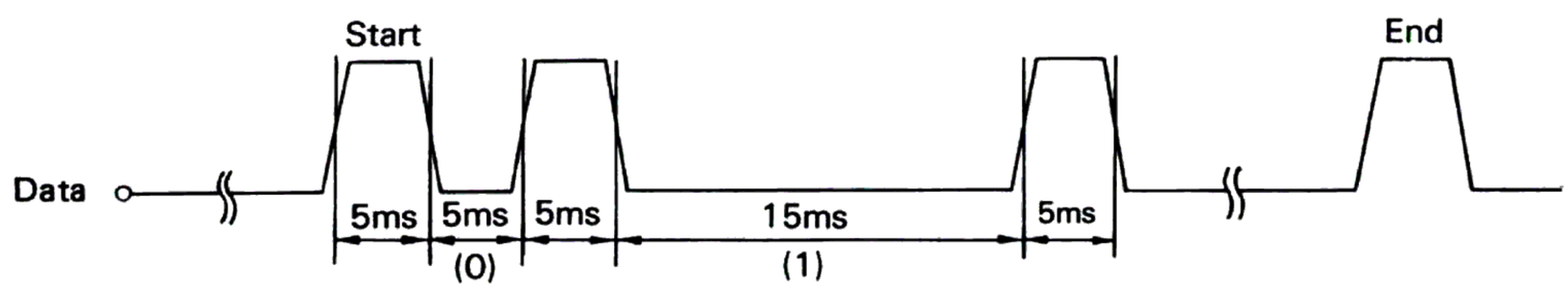

Signals "0" and "1" of data are transmitted being discriminated by different intervals between pulses.
Namely, pulse interval 5 ms . . . . . "0"
pulse interval 15 ms . . . . . "1"
Every transmission datum is composed of 8 bits, therefore, number of pulses for a datum is nine.

■ Configuration of datum

Binary-coded signal

b7	b6	b5	b4	b3	b2	b1	b0
1	0	1	0	0	0	0	1

Upper 4 bits
↓ Hexadecimal digit
A

Lower 4 bits
↓ Hexadecimal digit
1

A 1 : To change amplifier's sound source to PHONO.
DCS code — Content of code

www.hifiengine.com

■ Relationship between Remote Control Transmitter (RM-S20) and DCS Codes

	POWER		
	VCR	TV	AUDIO
	–	–	1) C0 2) C1
63 Hz/1	160 Hz/2	400 Hz/3	SEA CONTROL
3) D1	3) D2	3) D3	–
1 kHz/4	2.5 kHz/5	6.3 kHz/6	FM
3) D4	3) D5	3) D6	C2
16 kHz/7	8	9	AM
3) D7	3) D8	3) D9	C3
0	– PRESET STATION SEA LEVEL +		TV
3) D0	3) C7	3) C6	–
ACOUSTIC EXPANDER			VIDEO 2
–			–
AUDIO	SEA ON/DEFEAT	SEA PRESET	VIDEO 3
–	–	–	–
VCR/VIDEO 1	PHONO	CD	TAPE
–	A1	A3	A4
(⏮) – CHANNEL SKIP + (⏭)		STOP (■)	PLAY (▶)
7) 44 8) 2C	7) 43 8) 2B	6) 86 7) 42 8) 2E	6) 87 7) 41 8) 21
TAPE CONTROL	PAUSE/STILL (❚❚)	STOP (■)	REC (●)
–	9) 25 10) 2D	9) 22	11) 2D 12) 29
VCR CONTROL	◀◀	PLAY (▶)	▶▶
–	9) 24	9) 20 10) 29	9) 23
MUTE		– VOLUME +	
10) 26		–	–

Notes:

1) AUDIO (POWER) key is pressed in STANDBY mode.
2) AUDIO (POWER) key is depressed at turning on power.
3) After depressing FM/AM key, another key is pressed.

6) After depressing PHONO key, another key is pressed.
7) After depressing CD key, another key is pressed.
8) After depressing TAPE key, another key is pressed.
9) After depressing TAPE CONTROL key, this key is pressed.
10) After depressing TAPE CONTROL key, this key and REC key are pressed at the same time.
11) After depressing TAPE CONTROL key, this key and PAUSE/STILL key are pressed at the same time.
12) After depressing TAPE CONTROL key, this key and PLAY key are pressed at the same time.

www.hifiengine.com

Removal Procedures

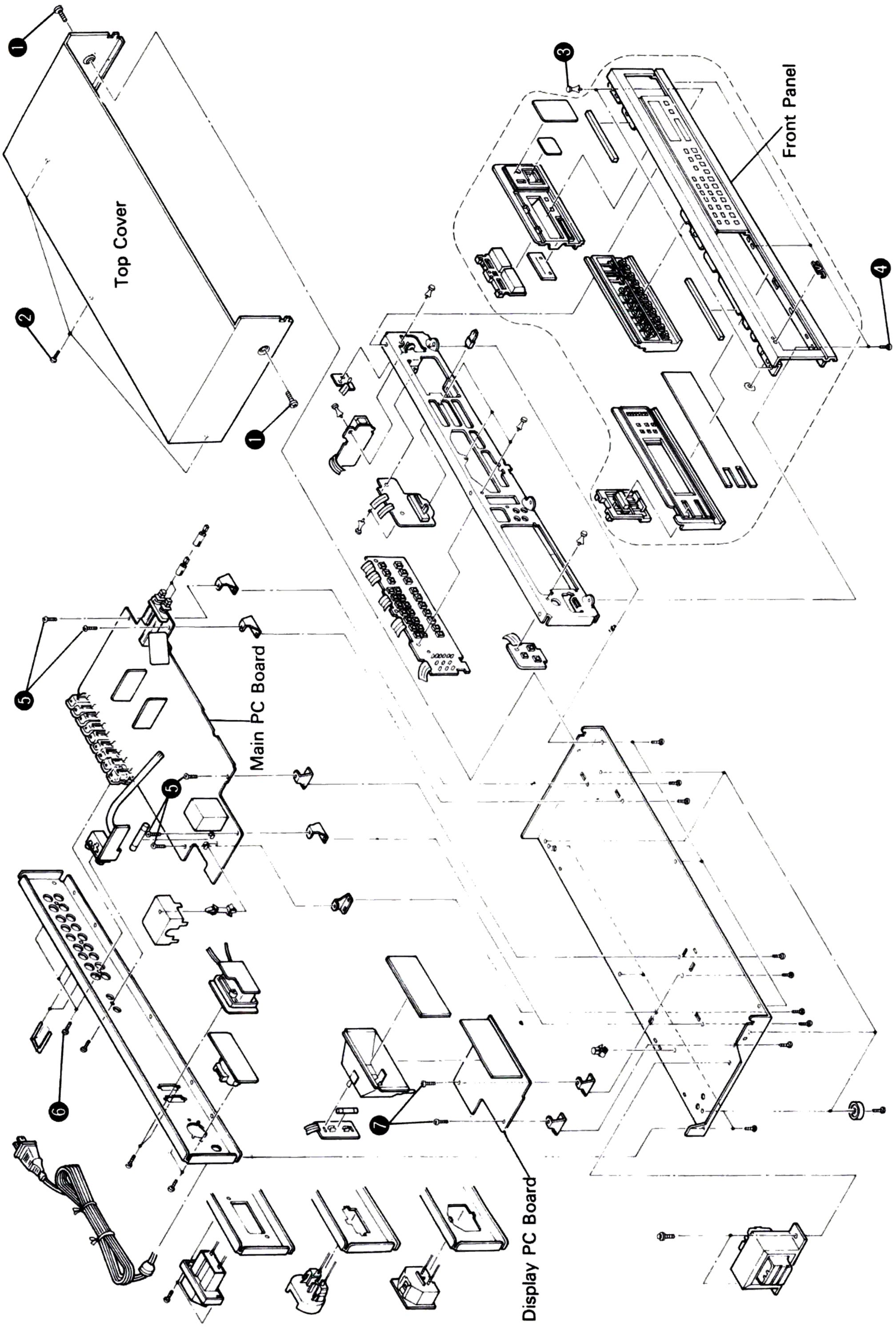

- **Removal of Top Cover**
  1. Remove the two screws ❶ of the both sides.
  2. Remove the three screws ❷ of the rear panel.
  3. Put off the top cover lifting it up by the rear end.
- **Removal of Front Panel**
  1. Remove the top cover (refer to the above).
  2. Remove the two plastic rivets ❸ securing the front panel from the top.
  3. Remove the three screws ❹ securing the front panel from the bottom.
- **Removal of Main P.C. Board**
  1. Remove the top cover (refer to the above).
  2. Remove the five screws ❺ securing the main P.C. board and the three screws ❻ securing it from the rear.
- **Removal of Display P.C. Board**
  1. Remove the top cover (refer to the above).
  2. Remove the two screws ❼ securing the display P.C. board.

Troubleshooting

Symptom	Checking Point	Test Point	Normal Voltage & Waveform	Measurement & Cause
• No operation at all	1. Secondary voltage of transformer	[Red]—[Red]	————	1. No voltage at any point: • Disconnection of power cord • Breaking of transformer's wire
	2. Voltage at:	Q801 Emitter Q802 Emitter Q804 Emitter	13.8 V −14.4 V 5.6 V	2. No voltage at checking points: • Fault of Q801—Q806 • Fault of D805, D806, D811 • Defective soldering of pattern
	3. Clock	IC101 pin 19 IC121 pin 16	4V IC101 : 4.19 MHz IC121 : 4 MHz	3. No waveform observed: • Fault of CX101, CX121 • Fault of IC101, IC121 • Defective soldering of pattern
• Abnormal LCD display	4. Output waveform of IC401 • Check waveform at common terminal (FL segment).	IC401 pins 53, 54, 1—17, 19—23, 25—41, 60—64. Waveform changes according to display's content.	————	4-1. No output from IC401: • Fault of IC401 4-2. Normal output from IC401: • Fault of LCD • Defective soldering of pattern
• Abnormal lighting of LED	5. Output of IC101	IC101 pins 3, 5, 10—12, 31—38	————	5. LED does not light. • Low voltage at IC101's pins • Defective soldering of pattern
• Fault of operation buttons S101—S121	6. Output waveform of IC101 & IC121 at a time of pressing operation button	IC101 pins 14—17 IC121 pins 5—8	5V 0	6. No waveform observed: • Fault of IC101, IC121 • Fault of S101—S108 • Fault of S121—S142 • Fault of D114—D119 • Fault of D121—D124 • Defective soldering of pattern
	7. Input waveform of IC101 & IC121 at a time of pressing operation button	IC101 pins 6—9, 45—48 IC121 pins 1—4, 9, 10, 13, 14	5V 0	7. No waveform observed: • Fault of IC101, IC121 • Defective soldering of pattern
• Relay inoperative (does not turn on)	8. Output voltage of IC101 • Relay voltage	IC101 pin 29 Collectors of Q901 & Q902	5 V (Relay ON) 0 V (Relay OFF) +29 V (Relay OFF)	8-1. No output: • Fault of IC101 8-2. Normal voltage: • Fault of Relay 8-3. Abnormal voltage: • Fault of Q901, Q902 • Defective soldering of pattern

www.hifiengine.com

Symptom	Checking Point	Test Point	Normal Voltage & Waveform	Measurement & Cause
• Remote controller inoperative	9. Output waveform of light-polarizing amplifier	IC601 pin 1 (Make sure to proceed this item with new battery.)	OFF reception 5V 0V ON reception 5V Waveform alters according to data received.	9-1. No waveform observed: • Fault of IC601 • Defective soldering of pattern • Fault of Remote Control Unit (RM-S20)
	• DCS output waveform	IC101 pin 27	At DCS output 5V 0 Waveform alters according to DCS data.	9-2. No waveform observed: • Fault of IC101 9-3. Waveform observed: • Defective soldering of pattern • Fault of Q152
• No backup	10. Charging voltage of C814	Plus (+) side of C814	5 V at Power ON, " at Standby. (In normal, voltage drops gradually in backup mode.)	10. Abnormal voltage drop after the unit enters Backup mode: • Fault of D810 • Fault of Q191–Q194 • Defective soldering of pattern

www.hifiengine.com

Connection Diagram

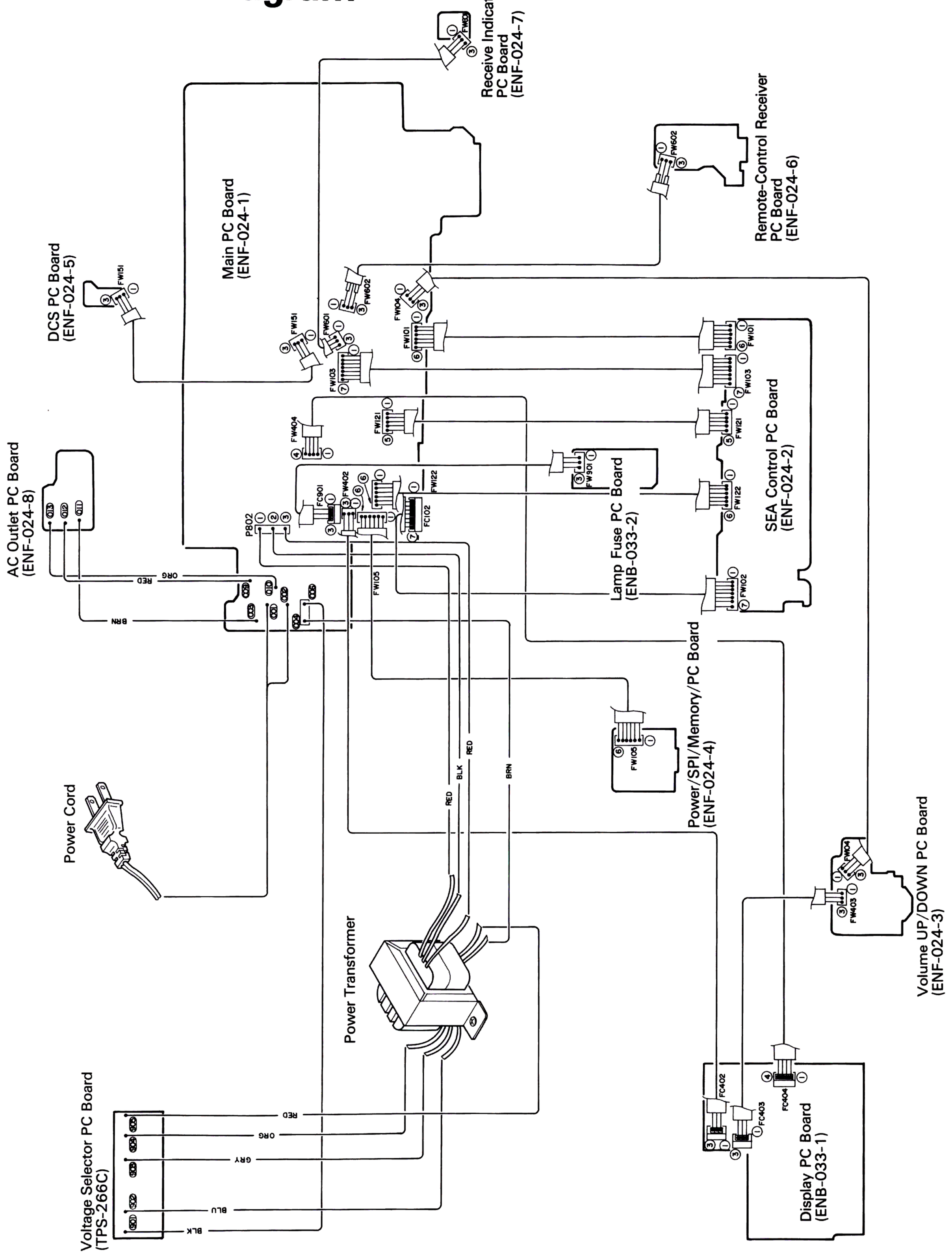

www.hifiengine.com

Handling precautions of LCD panels

The LCD (Liquid Crystal Display) panel employed in this device requires the following handling precautions.

1. Since the LCD is made of plate glass, never apply strong mechanical impact to it.

Do not forcibly press the light-polarizing plate.

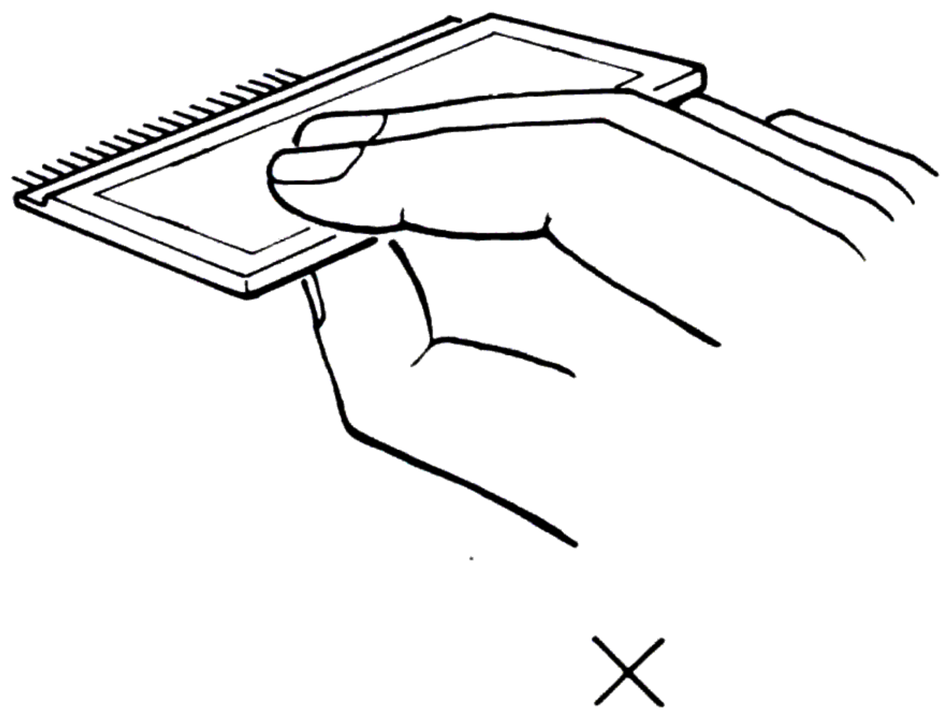

When handling, grip it as shown in the figure below.

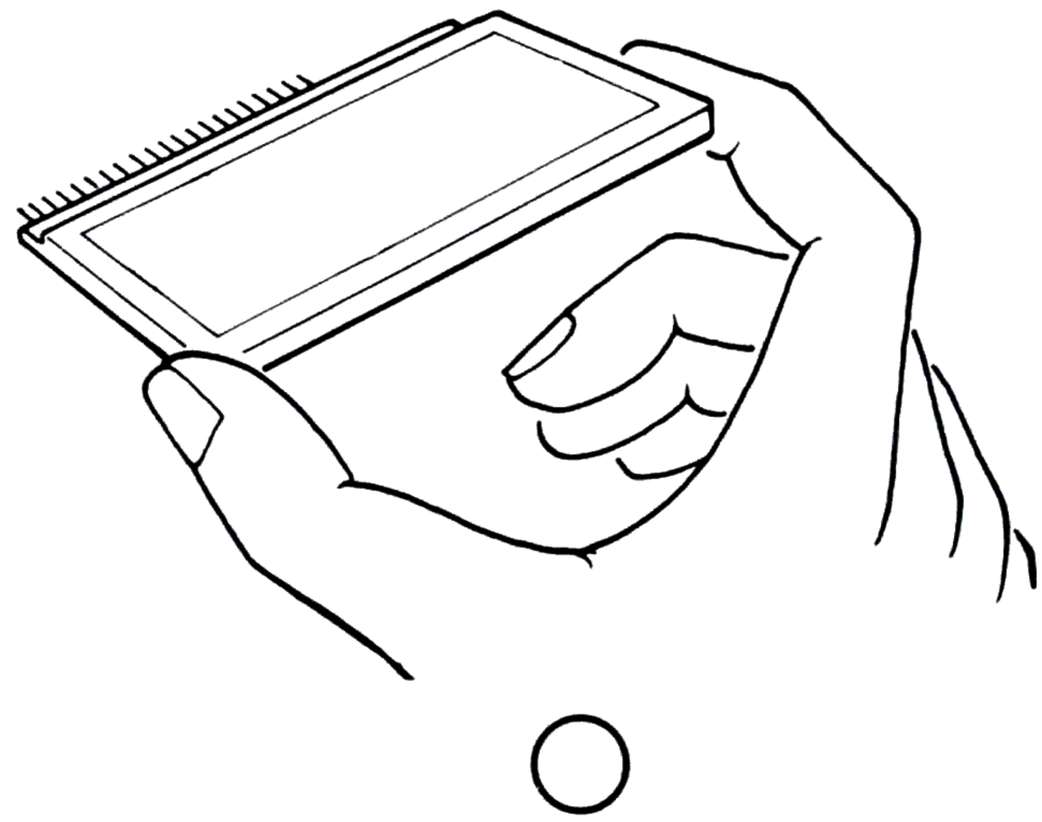

2. When handling the LCD, wear gloves whenever possible.
3. When the light-polarizing plate (surface other than silk-printed areas) becomes contaminated, use an applicator wet with isopropyl alcohol to gently wipe it clean. As for the silk-printed areas, use a soft cloth also to gently wipe it clean.

Note: The light-polarizing plate attached to the LCD surface and silk-printed areas are made of soft material.

4. As much as possible, avoid exposing the LCD to irradiation of harmful light (direct sunlight or ultraviolet rays), especially when the device is not in use.
5. Do not imprint DC voltage on pins of the LCD (characteristics will be degraded).
6. When the LCD is damaged, resulting in leakage of liquid crystal, be very cautious to avoid the liquid from penetrating one's mouth or being swallowed. Should liquid crystal contact the hands or clothing, immediately wash with water, using soap or other appropriate cleanser.

www.hifiengine.com

Servicing Method for AWG # 20 Wires with Clamping Terminals

(1) Application objective ⇨ Confirmation of safety
Used to prevent breakage/disconnection troubles of primary and secondary wires within PC boards (or between PC boards). Even when wire breakage/disconnection has actually occurred, a safe air-gap distance between the primary wire and the secondary wire/possibly contacting metal surface can be maintained because the terminal retains the wire sheathing.

(2) Type of wire used
① 1015 AWG-#20 (single-coated)
② 1672 AWG-#20 (double-coated)

(3) Servicing precautions
① The structural design of this terminal causes its catch to hook onto the PC board, preventing the wire from being easily pulled out. As shown in the figure, use cutting pliers or a similar tool to cut off the ends of the terminal and wire; then remove the remaining terminal clip by melting the soldering.

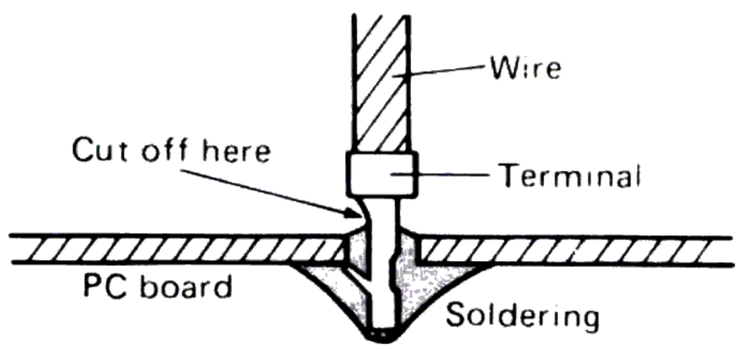

② Prior to soldering the wire onto the PC board, confirm safety by pressure-fitting the terminal to the wire by observing the following procedures.

1. Strip off the wire 5 ~ 6 mm from its end.

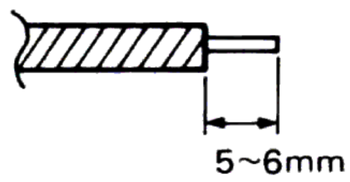

2. Insert the wire until its sheathing contacts section "A" of the terminal and pressure-fit the terminal clamp at three sections of ⓐ, ⓑ, and ⓒ (section ⓒ is especially important to assure safety. Exercise particular care to achieve secure clamping).

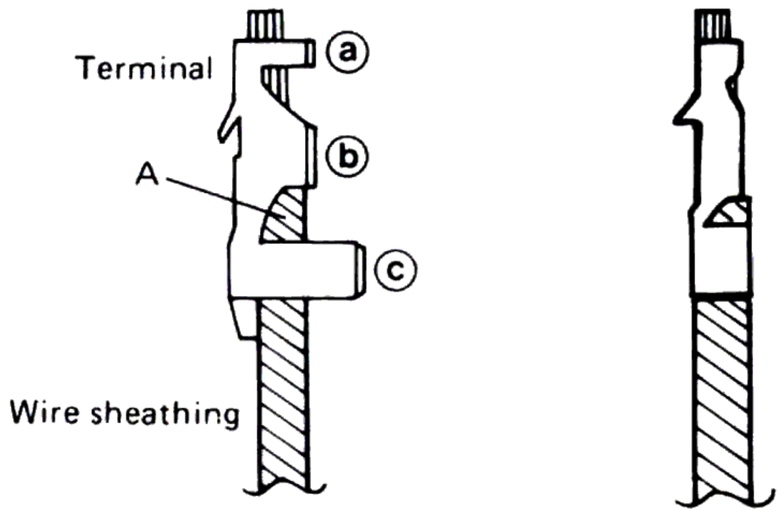

③ Part No., and name
Part No. : 5298T
Name : CRIMP PIN

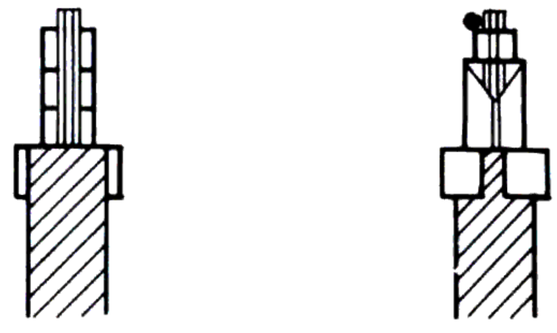

www.hifiengine.com

Internal Block Diagrams of Major ICs

IC101: μPD7508HC-074
IC121: μPD7507HG-507

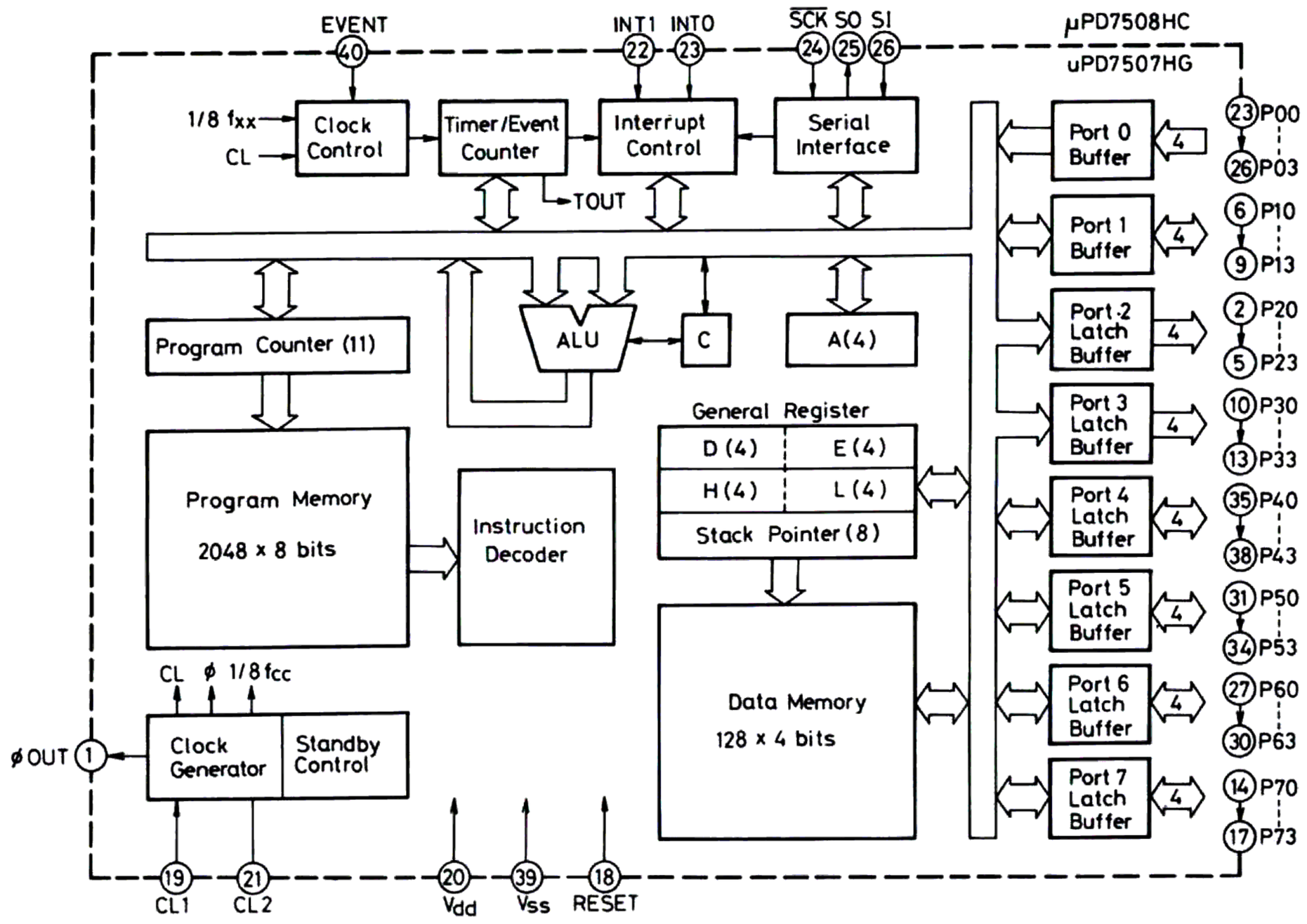

IC203, IC204: 7EL-GEQ-001

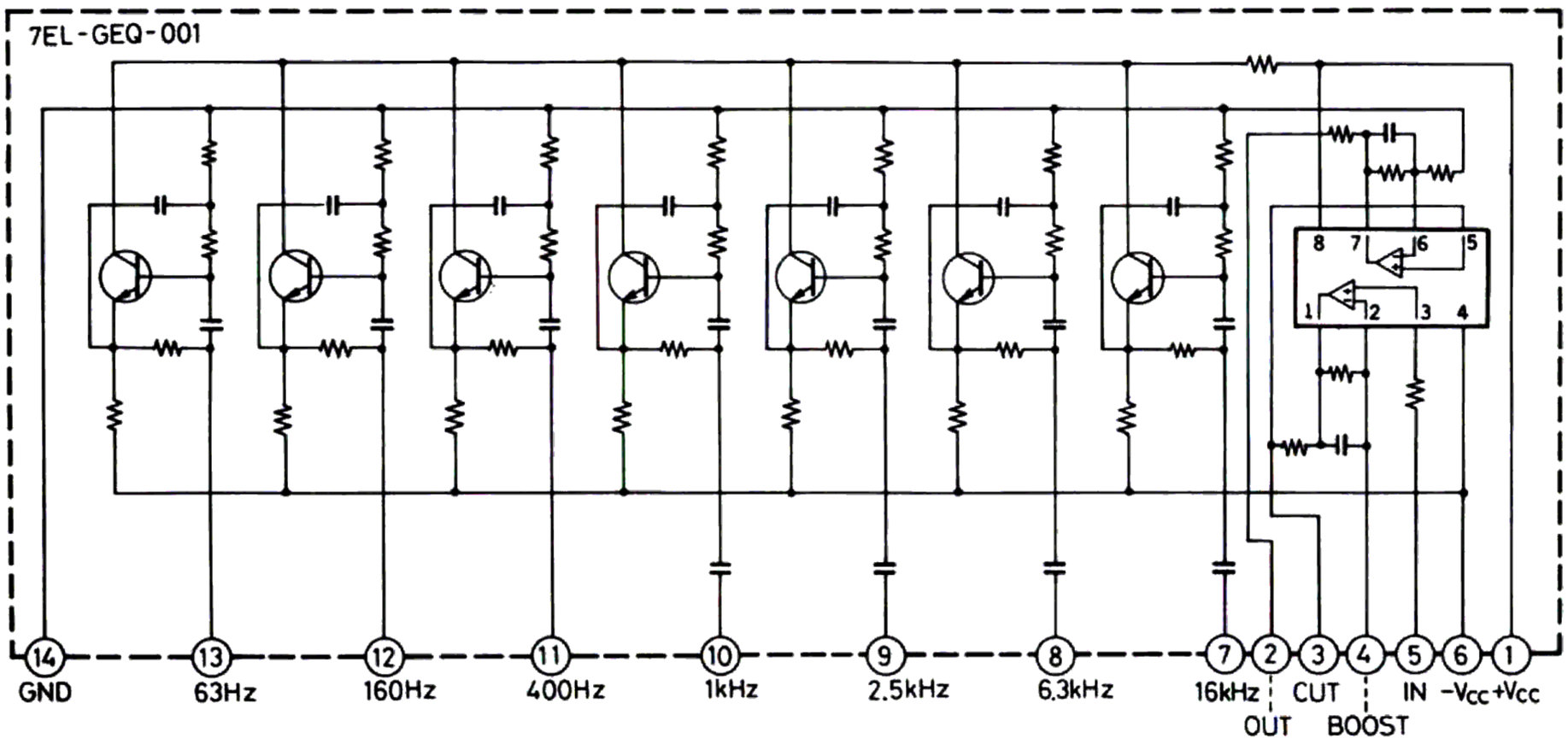

IC402: 7EL-SP1-001

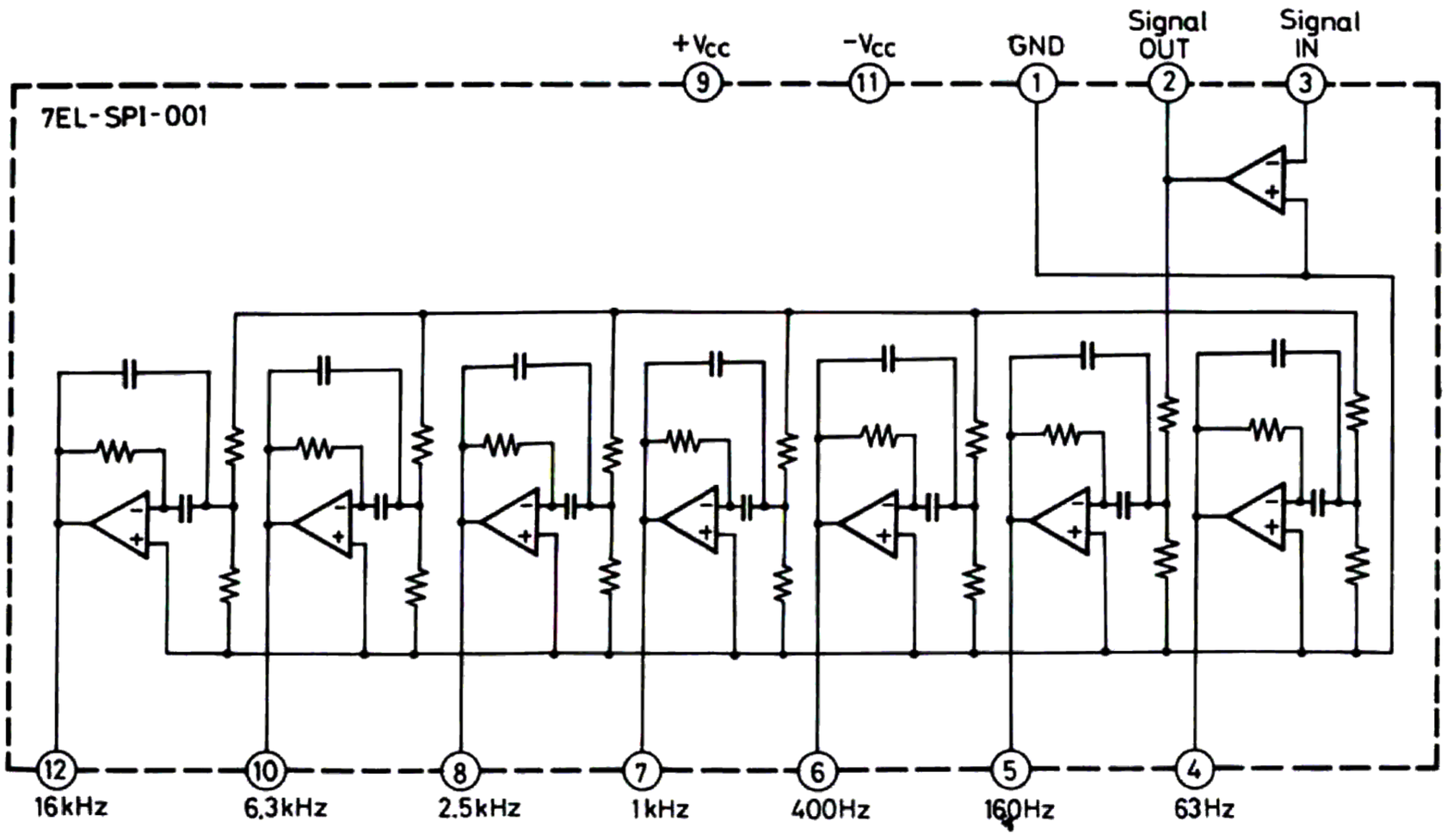

Schematic Diagrams

Main Control Section

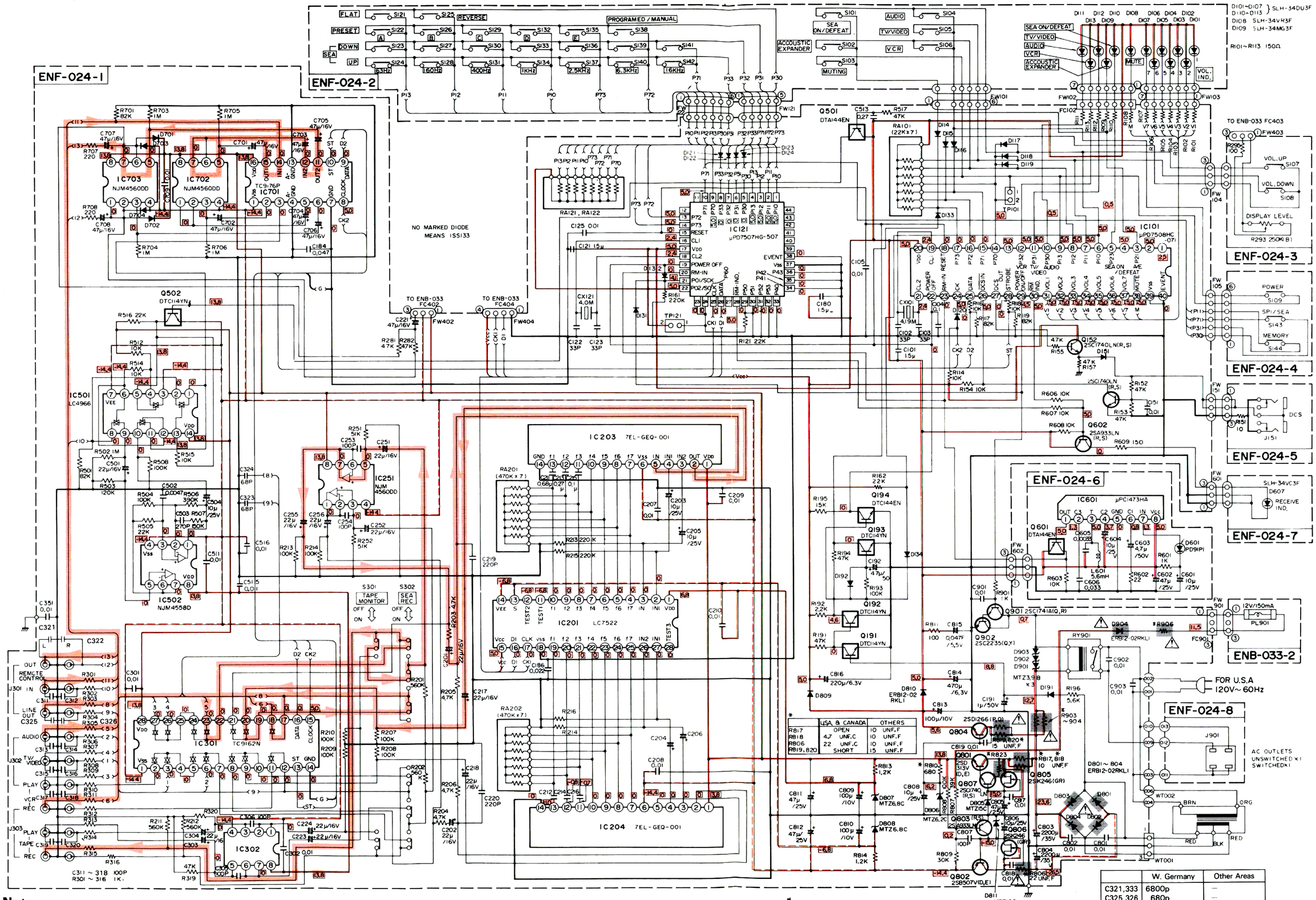

	USA & CANADA	OTHERS
R817	OPEN	10 UNF.F
R818	4.7 UNF.C	10 UNF.F
R806	22 UNF.C	10 UNF.F
R819,820	SHORT	15 UNF.F

	USA & CANADA	OTHERS
R823	SHORT	120 UNF.F
R903,904	270 (1W)	270 (2W)
R906	10 UNF.C	10 UNF.F
R810	680 1/6W	680 UNF.C

	W. Germany	Other Areas
C321,333	6800p	—
C325,326	680p	—
C305,306	220p	100p
C319,320	220p	100p
C323,324	470p	68p

Notes:

1. ——— indicates positive B power supply.
2. - - - indicates negative B power supply.
3. ▒ indicates signal path.
4. When replacing the parts in the darkened area (▒) and those marked with ⚠, be sure to use the designated parts to ensure safety.
5. This is the standard circuit diagram.
   The design and contents are subject to change without notice.

(No. 2893)

LCD Display and Power Supply Section

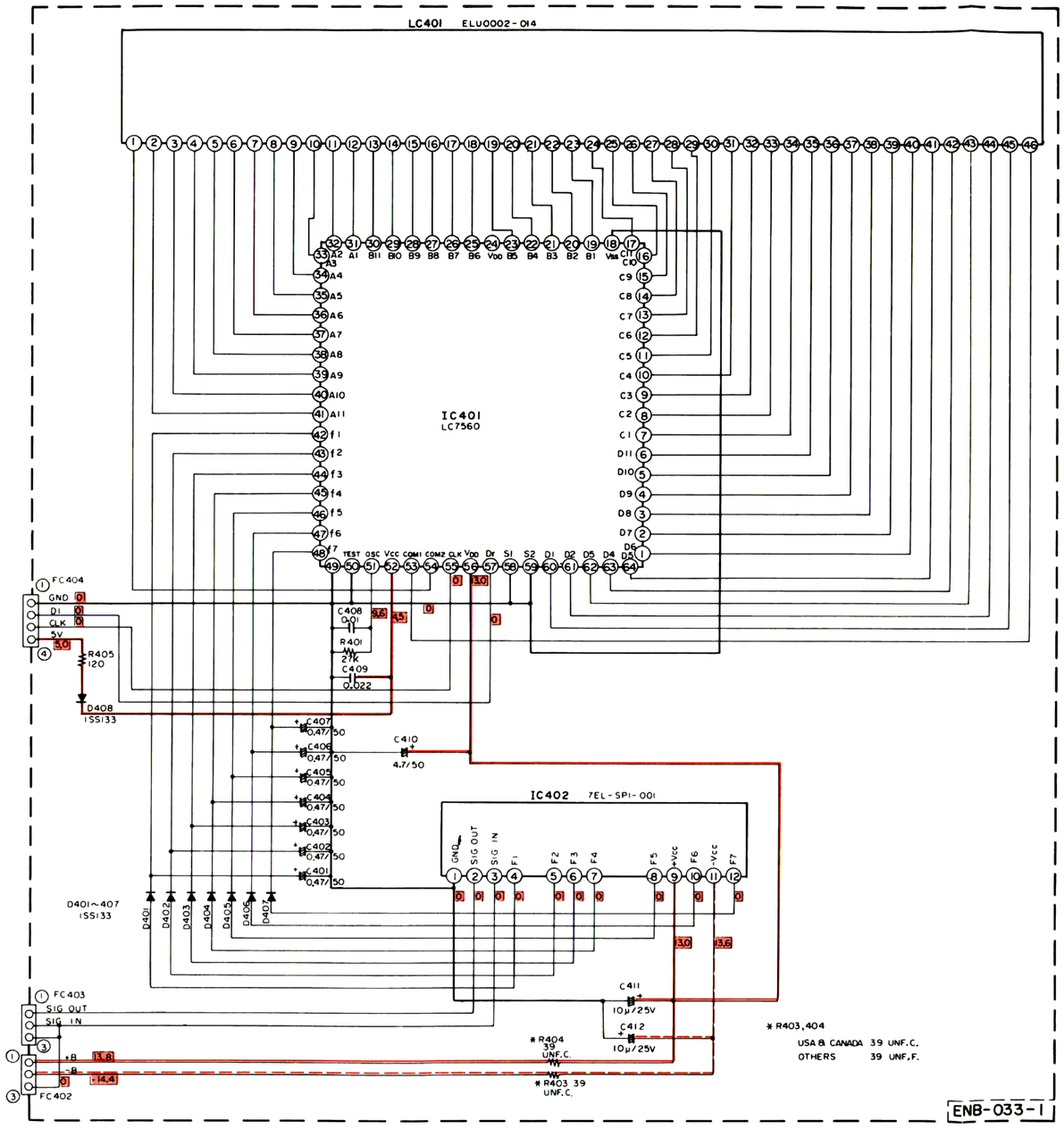

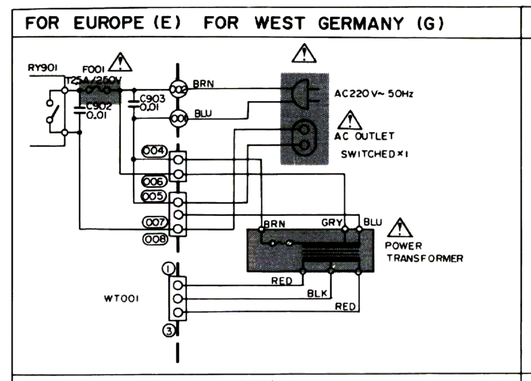

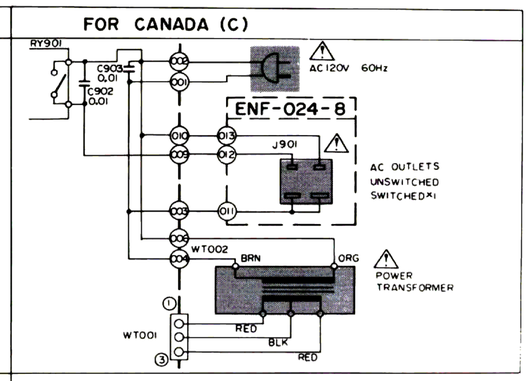

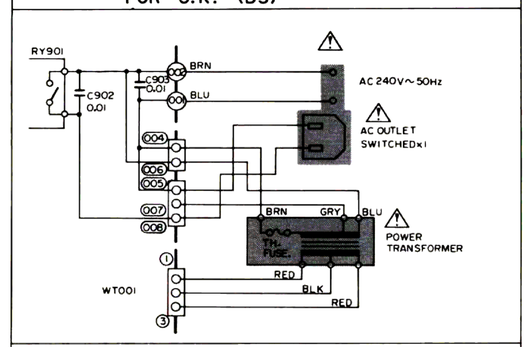

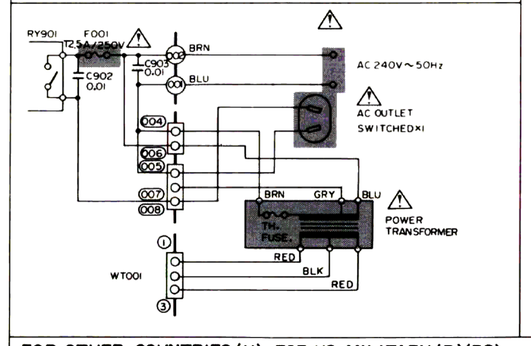

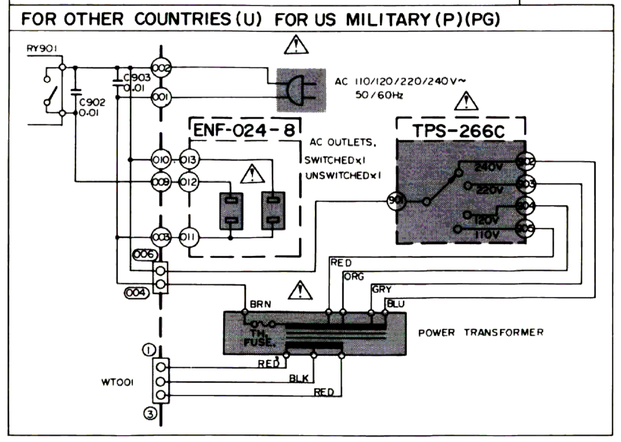

Notes:

1. ——— indicates positive B power supply.
2. - - - indicates negative B power supply.
3. ▒ indicates signal path.
4. When replacing the parts in the darkened area (▒) and those marked with ⚠ , be sure to use the designated parts to ensure safety.
5. This is the standard circuit diagram.
   The design and contents are subject to change without notice.

PARTS LIST

Contents

Main Parts Locations 2-2
- Top View. 2-2
- Front View. 2-2
- Rear View 2-2

Exploded View and Part Numbers 2-3
Printed Circuit Board Ass'y and Parts List 2-5
- ENF-024 □ Main P.C. Board Ass'y 2-5
- ENB-033 □ Display P.C.Board Ass'y 2-9
- TPS-266C Voltage Selector P.C. Board Ass'y 2-9

Packing Materials and Part Numbers 2-10
Accessories List 2-10

www.hifiengine.com

Main Parts Locations

■ Front View

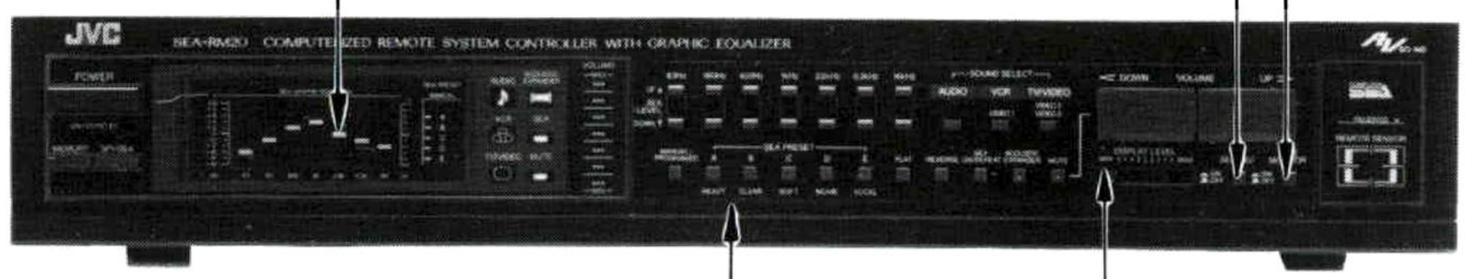

■ Top View

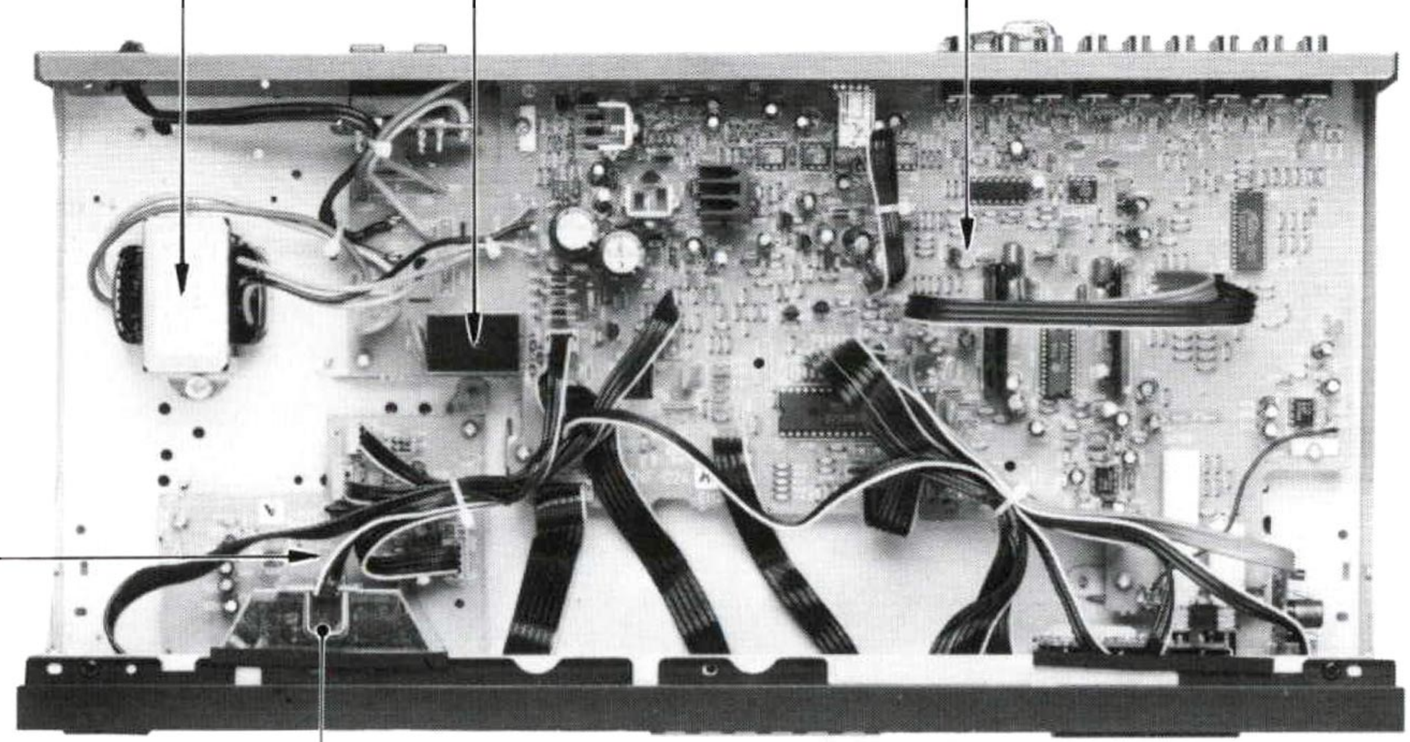

■ Rear View

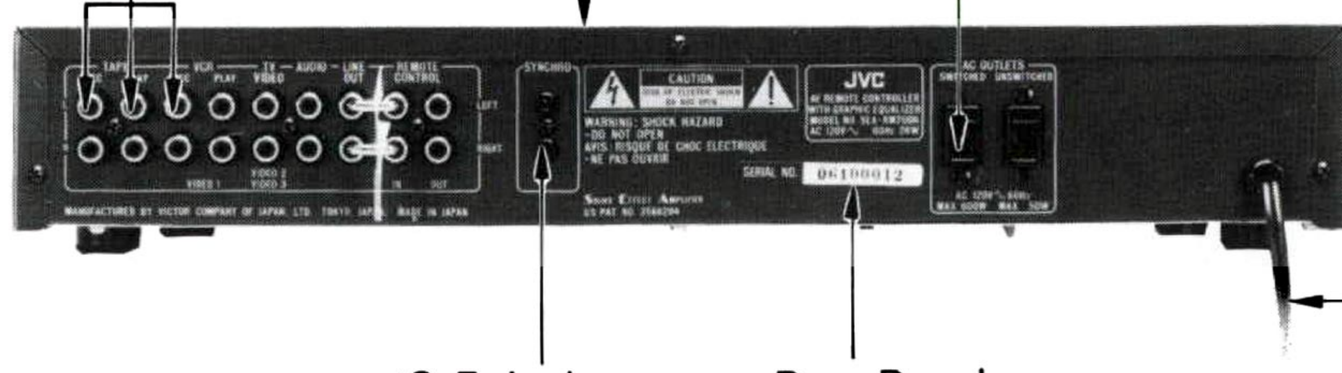

Note: As the picture is of a trial product, location of the φ3.5 jack is different from that of products on the market.

www.hifiengine.com

Exploded View and Part Numbers

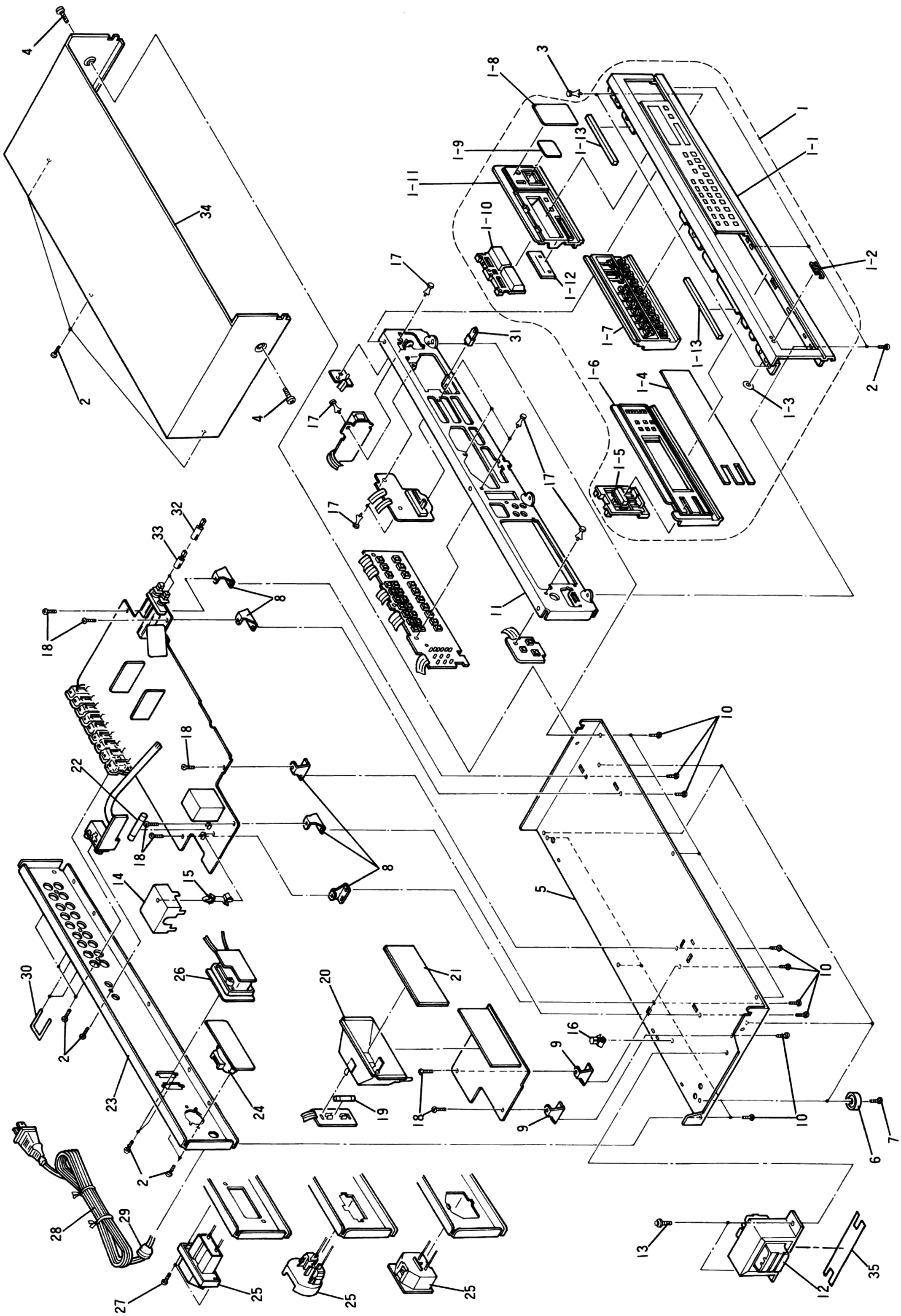

www.hifiengine.com

△	Item	Part Number	Part Name	Q'ty	Description	Areas
	1	EFP-SEARM20BKE	Front Panel Ass'y	1		
	1-1	E25274-001	Front Panel	1		
	1-2	E72968-001	JVC Mark	1		
	1-3	E60912-003	Speed Nut	1		
	1-4	E304116-003	Window Screen	1		
	1-5	E25235-001	Push Knob	1	Power	
	1-6	E25276-001	LCD Escutcheon	1		
	1-7	E25278-001	Push Knob	1	SEA	
	1-8	E72824-001	Sheet	1		
	1-9	E71959-002	Screen	1	Remote	
	1-10	E304087-002	Push Knob	1	Volume	
	1-11	E25277-001	Knob Escutcheon	1		
	1-12	E72828-001	Felt Spacer	1	Slide	
	1-13	EX0075005N40S02	Felt Spacer	2	Upper	
	2	SBSB3008M	Screw	14		
	3	E48729-009	Plastic Rivet	2		
	4	E61660-004	Special Screw	2		
	5	E24658-004	Chassis Base	1		
	6	E47227-012	Foot	4		
	7	SBSB3010N	Screw	4		
	8	E68587-003	Bracket	5		
	9	E68587-006	Bracket	2		
	10	SBSB3008N	Screw	13		
	11	E11248-001	Front Bracket	1		
△	12	ETP1010-29JA	Power Transformer	1		J,C
△	12	ETP1010-29HA	Power Transformer	1		U,P,PG
△	12	ETP1010-29EA	Power Transformer	1		E,A,G
△	12	ETP1010-29EABS	Power Transformer	1		BS
	13	E65389-004	Screw	2		
△	14	E72946-001	Primary Cover	1		E,A,G,BS
	15	E302321-001	Fastener	1	Primary Cover	E,A,G,BS
	16	E72628-002	Fastener	1	Supporting	
	17	E48729-008	Plastic Rivet	8		
	18	SBSB3008CC	Screw	7	Coppered Screw	
△	19	ELP4101-003	Fuse Lamp	1	LCD	
	20	E303283-001	Lamp Holder	1	LCD	
	21	E73005-002	Sheet	1	LCD	
△	22	QMF51A2-2R5S	Fuse	1	F001	E,A,G
	23	E25279-006	Rear Panel	1		J
	23	E25279-007	Rear Panel	1		C
	23	E25279-008	Rear Panel	1		U,P,PG
	23	E25279-009	Rear Panel	1		E,G
	23	E25279-010	Rear Panel	1		BS
	23	E25279-011	Rear Panel	1		A
△	24	QSR0074-001	Voltage Selector	1		U,P,PG
△	25	QMC0240-002	AC Socket	1		E,G
△	25	EMC0233-001	AC Outlet	1		A
△	25	EMC0232-001BS	AC Outlet	1		BS
△	25	QMC0437-002	AC Outlet	1		J,U,P,PG
△	25	QMC0440-001	AC Outlet	1		C
	26	E69589-008	Spacer	1	AC Outlet	J
	27	SBSB3016M	Screw	2	AC Socket	E,G
△	28	QMP1200-200	Power Cord	1		J
△	28	QMP1340-200	Power Cord	1		C
△	28	QMP7600-250	Power Cord	1		U,P,PG
△	28	QMP3900-200	Power Cord	1		E,G
△	28	QMP2560-244	Power Cord	1		A
△	28	QMP9017-008BS	Power Cord	1		BS
△	29	QHS3876-162BS	Cord Stopper	1		BS
△	29	QHS3876-162	Cord Stopper	1		Except BS
	30	EMZ3001-001	Short Pin	2		
	31	E72826-001	Slide Knob	1		
	32	E69907-007	Push Knob	2		
	33	E67393-002	Push Shaft	2		
	34	E24661-012	Metal Cover	1		
	35	E73116-001	Spacer	1	Power Transformer	

△ : Safety Parts

The Marks for Designated Areas

J . . . . . U.S.A.
C . . . . . Canada
A . . . . . Australia
E . . . . . Continental Europe
G . . . . . West Germnay
P,PG . . . . . U.S. Military Market
BS . . . . . U.K.
U . . . . . Other Countries

www.hifiengine.com

Printed Circuit Board Ass'y and Parts List

■ ENF-024 □ Main P. C. Board Ass'y

Note: ENF-024 □ varies according to the areas employed. See note (1) when placing an order.

Note (1)

P.C. Board Ass'y	Designated Aseas
ENF-024 A	U.S.A.
ENF-024 B	Canada
ENF-024 C	U.S. Miltary & Other Coantries
ENF-024 D	Europe & Australia
ENF-024 EBS	U.K.
ENF-024 F	West Germany

Note (2)
The symbols (赤、黒、白 . . . . . etc.) on P.C. Board surface are factory process only.

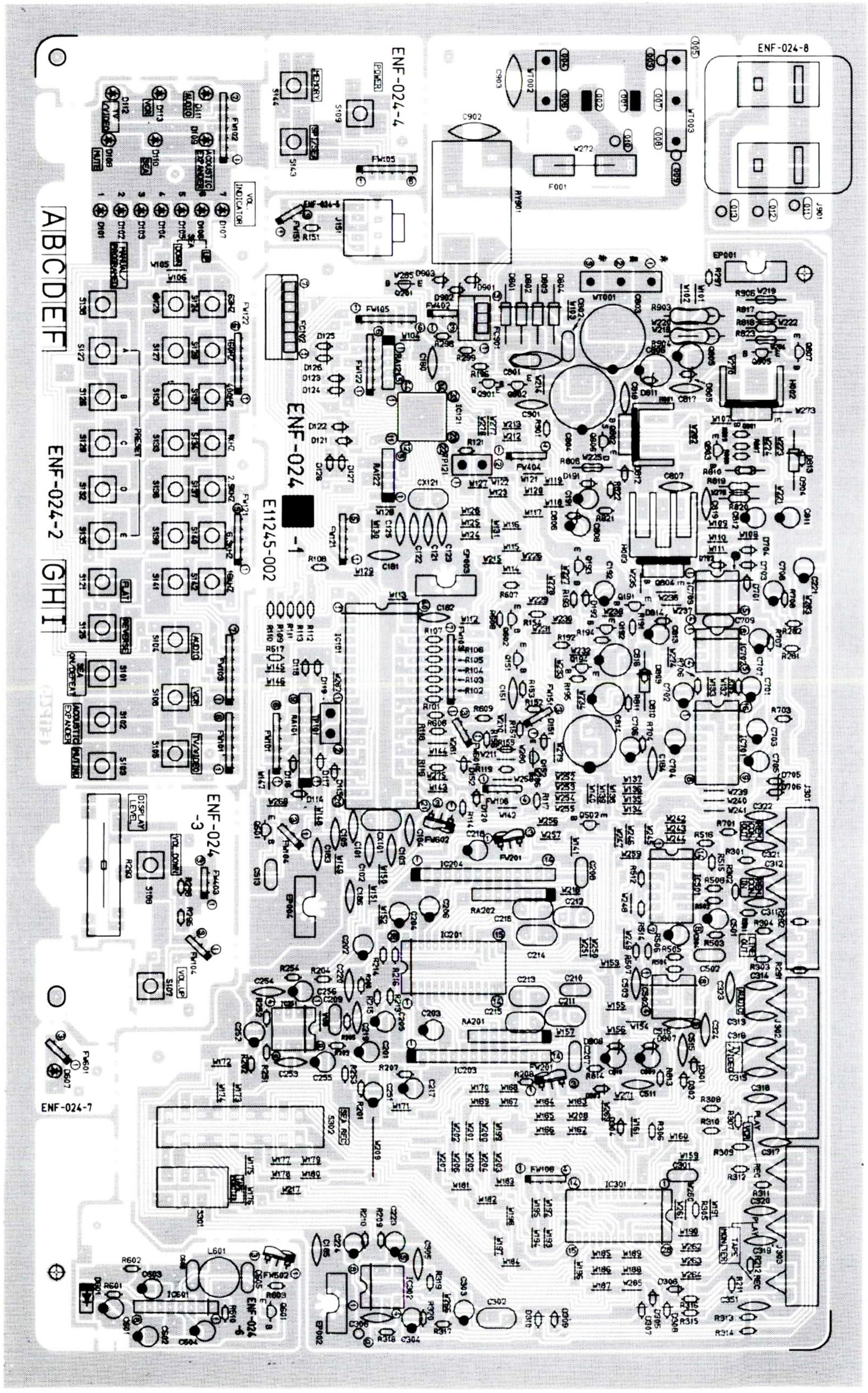

TRANSITORS

⚠	ITEM	PART NUMBER	DESCRIPTION	MAKER	AREA
	Q151	2SC1740LN(R,S)	SILICON	ROHM	
	Q152	2SC1740LN(R,S)	SILICON	ROHM	
	Q191	DTC114YN	SILICON	ROHM	
	Q192	DTC114YN	SILICON	ROHM	
	Q193	DTC114YN	SILICON	ROHM	
	Q194	DTC144EN	SILICON	ROHM	
	Q501	DTA144EN	SILICON	ROHM	
	Q502	DTC114YN	SILICON	ROHM	
	Q601	DTA144EN	SILICON	ROHM	
	Q602	2SA933LN(R,S)	SILICON	ROHM	
	Q801	2SD313V(D,E)	SILICON	SANYO	
	Q802	2SB507V(D,E)	SILICON	SANYO	
	Q803	2SA933LN(R,S)	SILICON	ROHM	
	Q804	2SD1266(P,Q)	SILICON	MATSUSHITA	
	Q805	2SK246(GR)	F.E.T	TOSHIBA	
	Q806	2SK246(GR)	F.E.T	TOSHIBA	
	Q807	2SC1740LN(R,S)	SILICON	ROHM	
	Q901	2SC1741A(Q,R)	SILICON	ROHM	
	Q902	2SC2235(O,Y)	SILICON	TOSHIBA	

I. C. S

⚠	ITEM	PART NUMBER	DESCRIPTION	MAKER	AREA
	IC101	UPD7508HC-074	I.C.	NEC	
	IC121	UPD7507HG-507	I.C.	NEC	
	IC201	LC7522	I.C.	SANYO	
	IC203	7EL-GEQ-001	I.C.	KYOCERA	
	IC204	7EL-GEQ-001	I.C.	KYOCERA	
	IC251	NJM4560DD	I.C.	JRC	
	IC301	TC9162N	I.C.	TOSHIBA	
	IC302	NJM4560DD	I.C.	JRC	
	IC501	LC4966	I.C.	SANYO	
	IC502	NJM4558D	I.C.	JRC	
	IC601	UPC1473HA	I.C.	NEC	
	IC701	TC9176P	I.C.	TOSHIBA	
	IC702	NJM4560DD	I.C.	JRC	
	IC703	NJM4560DD	I.C.	JRC	

DIODES

⚠	ITEM	PART NUMBER	DESCRIPTION	MAKER	AREA
	D101	SLH-34DU3F	L.E.D.	ROHM	
	D102	SLH-34DU3F	L.E.D.	ROHM	
	D103	SLH-34DU3F	L.E.D.	ROHM	
	D104	SLH-34DU3F	L.E.D.	ROHM	
	D105	SLH-34DU3F	L.E.D.	ROHM	
	D106	SLH-34DU3F	L.E.D.	ROHM	
	D107	SLH-34DU3F	L.E.D.	ROHM	
	D108	SLH-34VR3F	L.E.D.	ROHM	
	D109	SLH-34MG3F	L.E.D.	ROHM	
	D110	SLH-34DU3F	L.E.D.	ROHM	
	D111	SLH-34DU3F	L.E.D.	ROHM	
	D112	SLH-34DU3F	L.E.D.	ROHM	
	D113	SLH-34DU3F	L.E.D.	ROHM	
	D114	1SS133	SILICON	ROHM	
	D115	1SS133	SILICON	ROHM	
	D116	1SS133	SILICON	ROHM	
	D117	1SS133	SILICON	ROHM	
	D118	1SS133	SILICON	ROHM	
	D119	1SS133	SILICON	ROHM	
	D120	1SS133	SILICON	ROHM	
	D121	1SS133	SILICON	ROHM	
	D122	1SS133	SILICON	ROHM	
	D123	1SS133	SILICON	ROHM	
	D124	1SS133	SILICON	ROHM	
	D131	1SS133	SILICON	ROHM	
	D132	1SS133	SILICON	ROHM	
	D133	1SS133	SILICON	ROHM	
	D134	1SS133	SILICON	ROHM	
	D151	1SS133	SILICON	ROHM	
	D191	1SS133	SILICON	ROHM	
	D192	1SS133	SILICON	ROHM	
	D601	PD49PI	SILICON	SHARP	
	D607	SLH-34VR3F	L.E.D.	ROHM	
	D701	1SS133	SILICON	ROHM	
	D702	1SS133	SILICON	ROHM	
	D703	1SS133	SILICON	ROHM	
	D704	1SS133	SILICON	ROHM	

⚠	ITEM	PART NUMBER	DESCRIPTION	MAKER	AREA
⚠	D801	ERB12-02RKL1	SILICON	FUJIDENKI	
⚠	D802	ERB12-02RKL1	SILICON	FUJIDENKI	
⚠	D803	ERB12-02RKL1	SILICON		
⚠	D804	ERB12-02RKL1	SILICON		
	D805	MTZ15C	ZENER	ROHM	
	D806	MTZ6.2C	ZENER	ROHM	
	D807	MTZ6.8C	ZENER	ROHM	
	D808	MTZ6.8C	ZENER	ROHM	
	D809	1SS133	SILICON	ROHM	
	D810	ERB12-02RKL1	SILICON	FUJIDENKI	
	D811	MTZ15C	ZENER	ROHM	
	D814	MTZ6.8C	ZENER	ROHM	C
	D814	MTZ6.8C	ZENER	ROHM	D
	D814	MTZ6.8C	ZENER	ROHM	EBS
	D814	MTZ6.8C	ZENER	ROHM	F
	D901	MTZ3.9B	ZENER	ROHM	
	D902	MTZ3.9B	ZENER	ROHM	
	D903	MTZ3.9B	ZENER	ROHM	
	D904	ERB12-02RKL1	SILICON		

⚠ : SAFETY PARTS

CAPACITORS

⚠	ITEM	PART NUMBER	DESCRIPTION			AREA
	C101	QCZ0202-155	1.5MF	50V	CERAMIC	
	C102	QCS21HJ-330	33PF	50V	CERAMIC	
	C103	QCS21HJ-330	33PF	50V	CERAMIC	
	C104	QCF21HP-103	0.1MF	50V	MYLAR	
	C105	QFN81HJ-104	0.01MF	50V	CERAMIC	
	C121	QCZ0202-155	1.5MF	50V	CERAMIC	
	C122	QCS21HJ-330	33PF	50V	CERAMIC	
	C123	QCS21HJ-330	33PF	50V	CERAMIC	
	C125	QCF21HP-103	0.01MF	50V	CERAMIC	
	C151	QCF21HP-103	0.01MF	50V	CERAMIC	
	C180	QCZ0202-155	1.5MF	50V	CERAMIC	
	C184	QCF21HP-473	0.047MF	50V	CERAMIC	
	C186	QCF21HP-223	0.022MF	50V	CERAMIC	
	C191	QETB1HM-105	1MF	50V	ELECTRO	
	C192	QETB1HM-475	4.7MF	50V	ELECTRO	
	C201	QETB1CM-226	22MF	16V	ELECTRO	
	C202	QETB1CM-226	22MF	16V	ELECTRO	
	C203	QETB1EM-106	10MF	25V	ELECTRO	
	C204	QETB1EM-106	10MF	25V	ELECTRO	
	C205	QETB1EM-106	10MF	25V	ELECTRO	
	C206	QETB1EM-106	10MF	25V	ELECTRO	
	C207	QFN81HK-103	0.01MF	50V	MYLAR	
	C208	QFN81HK-103	0.01MF	50V	MYLAR	
	C209	QFN81HK-103	0.01MF	50V	MYLAR	
	C210	QFN81HK-103	0.01MF	50V	MYLAR	
	C211	QFV81HJ-684	0.68MF	50V	T.FILM	
	C212	QFV81HJ-684	0.68MF	50V	T.FILM	
	C213	QFV81HJ-274	0.27MF	50V	T.FILM	
	C214	QFV81HJ-274	0.27MF	50V	T.FILM	
	C215	QFN81HJ-104	0.1MF	50V	MYLAR	
	C216	QFN81HJ-104	0.1MF	50V	MYLAR	
	C217	QETB1CM-226	22MF	16V	ELECTRO	
	C218	QETB1CM-226	22MF	16V	ELECTRO	
	C219	QCS21HJ-221	220PF	50V	CERAMIC	
	C220	QCS21HJ-221	220PF	50V	CERAMIC	
	C221	QETB1CM-476	47MF	16V	ELECTRO	
	C223	QETB1CM-226	22MF	16V	ELECTRO	
	C224	QETB1CM-226	22MF	16V	ELECTRO	
	C251	QETB1CM-226	22MF	16V	ELECTRO	
	C252	QETB1CM-226	22MF	16V	ELECTRO	
	C253	QCS21HJ-101	100PF	50V	CERAMIC	
	C254	QCS21HJ-101	100PF	50V	CERAMIC	
	C255	QETB1CM-226	22MF	16V	ELECTRO	
	C256	QETB1CM-226	22MF	16V	ELECTRO	
	C301	QFN81HK-103	0.01MF	50V	MYLAR	
	C302	QFN81HK-103	0.01MF	50V	MYLAR	
	C303	QETB1CM-226	22MF	16V	ELECTRO	
	C304	QETB1CM-226	22MF	16V	ELECTRO	
	C305	QCS21HJ-101	100PF	50V	CERAMIC	
	C306	QCS21HJ-101	100PF	50V	CERAMIC	
	C311	QCS21HJ-101	100PF	50V	CERAMIC	
	C312	QCS21HJ-101	100PF	50V	CERAMIC	
	C313	QCS21HJ-101	100PF	50V	CERAMIC	
	C314	QCS21HJ-101	100PF	50V	CERAMIC	
	C315	QCS21HJ-101	100PF	50V	CERAMIC	
	C316	QCS21HJ-101	100PF	50V	CERAMIC	

⚠ : SAFETY PARTS

www.hifiengine.com

CAPACITORS

⚠	ITEM	PART NUMBER	DESCRIPTION			AREA
	C317	QCS21HJ-101	100PF	50V	CERAMIC	
	C318	QCS21HJ-101	100PF	50V	CERAMIC	
	C319	QCS21HJ-101	100PF	50V	CERAMIC	
	C320	QCS21HJ-101	100PF	50V	CERAMIC	
	C323	QCS21HJ-680	68PF	50V	CERAMIC	
	C324	QCS21HJ-680	68PF	50V	CERAMIC	
	C351	QCF21HP-103	0.01MF	50V	CERAMIC	
	C501	QETB1CM-226	22MF	16V	ELECTRO	
	C502	QFN81HK-472	4700PF	50V	MYLAR	
	C503	QCS21HJ-271	270PF	50V	CERAMIC	
	C504	QETB1EM-106	10MF	25V	ELECTRO	
	C511	QFN81HK-103	0.01MF	50V	MYLAR	
	C513	QFV81HJ-274	0.27MF	50V	T.FILM	
	C515	QFN81HK-103	0.01MF	50V	MYLAR	
	C516	QFN81HK-103	0.01MF	50V	MYLAR	
	C601	QETB1EM-106	10MF	25V	ELECTRO	
	C602	QETB1EM-476	47MF	25V	ELECTRO	
	C603	QETB1HM-475	4.7MF	50V	ELECTRO	
	C604	QETB1EM-106	10MF	25V	ELECTRO	
	C605	QFN81HJ-332	3300PF	50V	MYLAR	
	C606	QFN81HK-333	0.033MF	50V	MYLAR	
	C701	QETB1CM-476	47MF	16V	ELECTRO	
	C702	QETB1CM-476	47MF	16V	ELECTRO	
	C703	QETB1CM-476	47MF	16V	ELECTRO	
	C704	QETB1CM-476	47MF	16V	ELECTRO	
	C705	QETB1CM-476	47MF	16V	ELECTRO	
	C706	QETB1CM-476	47MF	16V	ELECTRO	
	C707	QETB1CM-476	47MF	16V	ELECTRO	
	C708	QETB1CM-476	47MF	16V	ELECTRO	
	C709	QFN81HK-103	0.01MF	50V	MYLAR	
	C801	QFM82AK-103	0.01MF	100V	MYLAR	
	C802	QFM82AK-103	0.01MF	100V	MYLAR	
	C803	QETB1VM-228E	2200MF	35V	ELECTRO	
	C804	QETB1VM-228E	2200MF	35V	ELECTRO	
	C805	QETB1EM-476	47MF	25V	ELECTRO	
	C806	QETB1EM-106	10MF	25V	ELECTRO	
	C807	QCS21HJ-101	100PF	50V	CERAMIC	
	C808	QETB1EM-106	10MF	25V	ELECTRO	
	C809	QETB1AM-107	100MF	10V	ELECTRO	
	C810	QETB1AM-107	100MF	10V	ELECTRO	
	C811	QETB1EM-476	47MF	25V	ELECTRO	
	C812	QETB1EM-476	47MF	25V	ELECTRO	
	C813	QETB1AM-107	100MF	10V	ELECTRO	
	C814	QETB0JM-477	470MF	6.3V	ELECTRO	
	C815	EEZ0502-479	47MF		ELECTRO	
	C816	QETB0JM-227	220MF	6.3V	ELECTRO	
	C817	QCF21HP-103	0.01MF	50V	CERAMIC	
	C818	QCF21HP-103	0.01MF	50V	CERAMIC	
	C819	QCF21HP-103	0.01MF	50V	CERAMIC	
	C901	QCF21HP-103	0.01MF	50V	CERAMIC	
	C902	QCZ9038-103	0.01MF		CERAMIC	A
	C902	QCZ9038-103	0.01MF		CERAMIC	B
	C902	QCZ9038-103	0.01MF		CERAMIC	C
	C902	QCZ9038-103	0.01MF		CERAMIC	D
	C902	QCZ9038-103	0.01MF		CERAMIC	F
	C902	QCZ9038-103BS	0.01MF		CERAMIC	EBS
	C903	QCZ9038-103	0.01MF		CERAMIC	
	C903	QCZ9038-103	0.01MF		CERAMIC	A
	C903	QCZ9038-103	0.01MF		CERAMIC	B
	C903	QCZ9038-103	0.01MF		CERAMIC	C
	C903	QCZ9038-103	0.01MF		CERAMIC	D
	C903	QCZ9038-103	0.01MF		CERAMIC	F
	C903	QCZ9038-103BS	0.01MF		CERAMIC	EBS

⚠ : SAFETY PARTS

RESISTORS

⚠	ITEM	PART NUMBER	DESCRIPTION			AREA
	R101	QRD161J-151	150	1/6W	CARBON	
	R102	QRD161J-151	150	1/6W	CARBON	
	R103	QRD161J-151	150	1/6W	CARBON	
	R104	QRD161J-151	150	1/6W	CARBON	
	R105	QRD161J-151	150	1/6W	CARBON	
	R106	QRD161J-151	150	1/6W	CARBON	
	R107	QRD161J-151	150	1/6W	CARBON	
	R108	QRD161J-151	150	1/6W	CARBON	
	R109	QRD161J-151	150	1/6W	CARBON	
	R110	QRD161J-151	150	1/6W	CARBON	
	R111	QRD161J-151	150	1/6W	CARBON	
	R112	QRD161J-151	150	1/6W	CARBON	
	R113	QRD161J-151	150	1/6W	CARBON	
	R114	QRD161J-103	10K	1/6W	CARBON	
	R116	QRD161J-103	10K	1/6W	CARBON	

⚠	ITEM	PART NUMBER	DESCRIPTION			AREA
	R117	QRD161J-823	82K	1/6W	CARBON	
	R118	QRD161J-103	10K	1/6W	CARBON	
	R119	QRD161J-823	82K	1/6W	CARBON	
	R121	QRD161J-223	22K	1/6W	CARBON	
	R151	QRD161J-100	10	1/6W	CARBON	
	R152	QRD161J-473	47K	1/6W	CARBON	
	R153	QRD161J-473	47K	1/6W	CARBON	
	R154	QRD161J-103	10K	1/6W	CARBON	
	R155	QRD161J-472	4.7K	1/6W	CARBON	
	R157	QRD161J-473	47K	1/6W	CARBON	
	R161	QRD161J-224	220K	1/6W	CARBON	
	R162	QRD161J-223	22K	1/6W	CARBON	
	R191	QRD161J-473	47K	1/6W	CARBON	
	R192	QRD161J-222	2.2K	1/6W	CARBON	
	R193	QRD161J-104	100K	1/6W	CARBON	
	R194	QRD161J-473	47K	1/6W	CARBON	
	R195	QRD161J-153	15K	1/6W	CARBON	
	R196	QRD161J-562	5.6K	1/6W	CARBON	
	R201	QRD161J-564	560K	1/6W	CARBON	
	R202	QRD161J-564	560K	1/6W	CARBON	
	R203	QRD161J-472	4.7K	1/6W	CARBON	
	R204	QRD161J-472	4.7K	1/6W	CARBON	
	R205	QRD161J-472	4.7K	1/6W	CARBON	
	R206	QRD161J-472	4.7K	1/6W	CARBON	
	R207	QRD161J-104	100K	1/6W	CARBON	
	R208	QRD161J-104	100K	1/6W	CARBON	
	R209	QRD161J-104	100K	1/6W	CARBON	
	R210	QRD161J-104	100K	1/6W	CARBON	
	R211	QRD161J-564	560K	1/6W	CARBON	
	R212	QRD161J-564	560K	1/6W	CARBON	
	R213	QRD161J-224	220K	1/6W	CARBON	
	R214	QRD161J-224	220K	1/6W	CARBON	
	R215	QRD161J-224	220K	1/6W	CARBON	
	R216	QRD161J-224	220K	1/6W	CARBON	
	R251	QRD161J-513	51K	1/6W	CARBON	
	R252	QRD161J-513	51K	1/6W	CARBON	
	R253	QRD161J-104	100K	1/6W	CARBON	
	R254	QRD161J-104	100K	1/6W	CARBON	
	R281	QRD161J-472	4.7K	1/6W	CARBON	
	R282	QRD161J-103	10K	1/6W	CARBON	
	R293	QVWA01B-EF5B			VARIABLE	
	R295	QRD161J-101	100	1/6W	CARBON	
	R301	QRD161J-102	1K	1/6W	CARBON	
	R302	QRD161J-102	1K	1/6W	CARBON	
	R303	QRD161J-102	1K	1/6W	CARBON	
	R304	QRD161J-102	1K	1/6W	CARBON	
	R305	QRD161J-102	1K	1/6W	CARBON	
	R306	QRD161J-102	1K	1/6W	CARBON	
	R307	QRD161J-102	1K	1/6W	CARBON	
	R308	QRD161J-102	1K	1/6W	CARBON	
	R309	QRD161J-102	1K	1/6W	CARBON	
	R310	QRD161J-102	1K	1/6W	CARBON	
	R311	QRD161J-102	1K	1/6W	CARBON	
	R312	QRD161J-102	1K	1/6W	CARBON	
	R313	QRD161J-102	1K	1/6W	CARBON	
	R314	QRD161J-102	1K	1/6W	CARBON	
	R315	QRD161J-102	1K	1/6W	CARBON	
	R316	QRD161J-102	1K	1/6W	CARBON	
	R319	QRD161J-473	47K	1/6W	CARBON	
	R320	QRD161J-473	47K	1/6W	CARBON	
	R501	QRD161J-823	82K	1/6W	CARBON	
	R502	QRD161J-105	1M	1/6W	CARBON	
	R503	QRD161J-124	120K	1/6W	CARBON	
	R504	QRD161J-104	100K	1/6W	CARBON	
	R505	QRD161J-223	22K	1/6W	CARBON	
	R506	QRD161J-394	390K	1/6W	CARBON	
	R507	QRD161J-154	150K	1/6W	CARBON	
	R508	QRD161J-104	100K	1/6W	CARBON	
	R512	QRD161J-103	10K	1/6W	CARBON	
	R514	QRD161J-103	10K	1/6W	CARBON	
	R515	QRD161J-103	10K	1/6W	CARBON	
	R516	QRD161J-223	22K	1/6W	CARBON	
	R517	QRD161J-473	47K	1/6W	CARBON	
	R601	QRD161J-102	1K	1/6W	CARBON	
	R602	QRD161J-220	22	1/6W	CARBON	
	R603	QRD161J-103	10K	1/6W	CARBON	
	R606	QRD161J-103	10K	1/6W	CARBON	
	R607	QRD161J-103	10K	1/6W	CARBON	
	R608	QRD161J-103	10K	1/6W	CARBON	
	R609	QRD161J-151	150	1/6W	CARBON	
	R701	QRD161J-823	82K	1/6W	CARBON	
	R703	QRD161J-105	1M	1/6W	CARBON	
	R704	QRD161J-105	1M	1/6W	CARBON	
	R705	QRD161J-105	1M	1/6W	CARBON	
	R706	QRD161J-105	1M	1/6W	CARBON	
	R707	QRD161J-221	220	1/6W	CARBON	
	R708	QRD161J-221	220	1/6W	CARBON	

www.hifiengine.com

RESISTORS

⚠	ITEM	PART NUMBER	DESCRIPTION			AREA
⚠	R806	QRD145J-220S	22	1/4W	UNF.CARBON	A
⚠	R806	QRD145J-220S	22	1/4W	UNF.CARBON	B
⚠	R806	QRZ0062-100	10	1/4W	FUSIBLE	C
⚠	R806	QRZ0062-100	10	1/4W	FUSIBLE	D
⚠	R806	QRZ0062-100	10	1/4W	FUSIBLE	EBS
⚠	R806	QRZ0062-100	10	1/4W	FUSIBLE	F
	R807	QRD161J-393	39K	1/6W	CARBON	
	R808	QRD161J-104	100K	1/6W	CARBON	
	R809	QRD161J-303	30K	1/6W	CARBON	
⚠	R810	QRD145J-681S	680	1/4W	UNF.CARBON	C
⚠	R810	QRD145J-681S	680	1/4W	UNF.CARBON	D
⚠	R810	QRD145J-681S	680	1/4W	UNF.CARBON	EBS
⚠	R810	QRD145J-681S	680	1/4W	UNF.CARBON	F
	R810	QRD161J-681	680	1/6W	CARBON	A
	R810	QRD161J-681	680	1/6W	CARBON	B
	R811	QRD161J-101	100	1/6W	CARBON	
	R813	QRD161J-122	1.2K	1/6W	CARBON	
	R814	QRD161J-122	1.2K	1/6W	CARBON	
⚠	R817	QRZ0062-100	10	1/4W	FUSIBLE	C
⚠	R817	QRZ0062-100	10	1/4W	FUSIBLE	D
⚠	R817	QRZ0062-100	10	1/4W	FUSIBLE	EBS
⚠	R817	QRZ0062-100	10	1/4W	FUSIBLE	F
⚠	R818	QRD145J-4R7S	4.7	1/4W	UNF.CARBON	A
⚠	R818	QRD145J-4R7S	4.7	1/4W	UNF.CARBON	B
⚠	R818	QRZ0062-100	10	1/4W	FUSIBLE	C
⚠	R818	QRZ0062-100	10	1/4W	FUSIBLE	D
⚠	R818	QRZ0062-100	10	1/4W	FUSIBLE	EBS
⚠	R818	QRZ0062-100	10	1/4W	FUSIBLE	F
⚠	R819	QRZ0062-150	15	1/4W	FUSIBLE	C
⚠	R819	QRZ0062-150	15	1/4W	FUSIBLE	D
⚠	R819	QRZ0062-150	15	1/4W	FUSIBLE	EBS
⚠	R819	QRZ0062-150	15	1/4W	FUSIBLE	F
⚠	R820	QRZ0062-150	15	1/4W	FUSIBLE	C
⚠	R820	QRZ0062-150	15	1/4W	FUSIBLE	D
⚠	R820	QRZ0062-150	15	1/4W	FUSIBLE	EBS
⚠	R820	QRZ0062-150	15	1/4W	FUSIBLE	F
⚠	R823	QRZ0062-121	120	1/4W	FUSIBLE	C
⚠	R823	QRZ0062-121	120	1/4W	FUSIBLE	D
⚠	R823	QRZ0062-121	120	1/4W	FUSIBLE	EBS
	R901	QRD161J-102	1K	1/6W	CARBON	
⚠	R903	QRG012J-271A	270	1W	O.M.FILM	A
⚠	R903	QRG012J-271A	270	1W	O.M.FILM	B
⚠	R903	QRG026J-271AF	270	2W	O.M.FILM	C
⚠	R903	QRG026J-271AF	270	2W	O.M.FILM	D
⚠	R903	QRG026J-271AF	270	2W	O.M.FILM	EBS
⚠	R903	QRG026J-271AF	270	2W	O.M.FILM	F
⚠	R904	QRG012J-271A	270	1W	O.M.FILM	A
⚠	R904	QRG012J-271A	270	1W	O.M.FILM	B
⚠	R904	QRG026J-271AF	270	2W	O.M.FILM	C
⚠	R904	QRG026J-271AF	270	2W	O.M.FILM	D
⚠	R904	QRG026J-271AF	270	2W	O.M.FILM	EBS
⚠	R904	QRG026J-271AF	270	2W	O.M.FILM	F
⚠	R906	QRD145J-100S	10	1/4W	UNF.CARBON	A
⚠	R906	QRD145J-100S	10	1/4W	UNF.CARBON	B
⚠	R906	QRZ0062-100	10	1/4W	FUSIBLE	C
⚠	R906	QRZ0062-100	10	1/4W	FUSIBLE	D
⚠	R906	QRZ0062-100	10	1/4W	FUSIBLE	EBS
⚠	R906	QRZ0062-100	10	1/4W	FUSIBLE	F
	RA101	QRB075J-223	22K	8W	ARRAY	
	RA121	QRB045J-223	22K	4W	ARRAY	
	RA122	QRB045J-223	22K	4W	ARRAY	
	RA201	QRB075J-474	470K	7W	ARRAY	
	RA202	QRB075J-474	470K	7W	ARRAY	

⚠ : SAFETY PARTS

OTHERS

⚠	ITEM	PART NUMBER	DESCRIPTION	AREA
		EMG7331-001	FUSE CLIP	D
		EMG7331-001	FUSE CLIP	F
		EWT011-078	TERMINAL WIRE	
		E11245-002	CIRCUIT BOARD	A
		E11245-002	〃	B
		E11245-002	〃	C
		E11245-002	〃	D
		E11245-002	〃	F
		E11245-002BS	〃	EBS
		E48269-001	SPACER	C
		E48269-001	SPACER	D
		E48269-001	SPACER	EBS
		E48269-001	SPACER	F
		E65508-002	TAB	
		E65654-001	SPACER	C
		E65654-001	SPACER	D
		E65654-001	SPACER	EBS
		E65654-001	SPACER	F
		E67132-T2R5	FUSE LABEL	D
		E67132-T2R5	〃	EBS
		E67132-T2R5	〃	F
		E67883-001	SHIELD PLATE	
		E71504-001	SHIELD COVER	
		SBSB3008CC	SCREW	
		SBSB3008CC	SCREW	
		SBST3006Z	SCREW	
	H001	E70306-001	HEAT SINK	
	H002	E70306-001	HEAT SINK	
	H003	E69826-H40B	HEAT SINK	
	J151	QMS3533-001	JACK ASSY	
	J301	EMN00TV-602A	PIN JACK ASSY	
	J302	EMN00TV-602A	PIN JACK ASSY	
	J303	EMN00TV-602A	PIN JACK ASSY	
⚠	J901	QMC0437-002	AC SOCKET	A
⚠	J901	QMC0437-002	AC SOCKET	C
⚠	J901	QMC0440-001	AC SOCKET	B
	L601	EQL2103-562	INDUCTOR	
	S101	ESP0001-007	PUSH SWITCH	
	S102	ESP0001-007	PUSH SWITCH	
	S103	ESP0001-007	PUSH SWITCH	
	S104	ESP0001-007	PUSH SWITCH	
	S105	ESP0001-007	PUSH SWITCH	
	S106	ESP0001-007	PUSH SWITCH	
	S107	ESP0001-007	PUSH SWITCH	
	S108	ESP0001-007	PUSH SWITCH	
	S109	ESP0001-007	PUSH SWITCH	
	S121	ESP0001-007	PUSH SWITCH	
	S122	ESP0001-007	PUSH SWITCH	
	S123	ESP0001-007	PUSH SWITCH	
	S124	ESP0001-007	PUSH SWITCH	
	S125	ESP0001-007	PUSH SWITCH	
	S126	ESP0001-007	PUSH SWITCH	
	S127	ESP0001-007	PUSH SWITCH	
	S128	ESP0001-007	PUSH SWITCH	
	S129	ESP0001-007	PUSH SWITCH	
	S130	ESP0001-007	PUSH SWITCH	
	S131	ESP0001-007	PUSH SWITCH	
	S132	ESP0001-007	PUSH SWITCH	
	S133	ESP0001-007	PUSH SWITCH	
	S134	ESP0001-007	PUSH SWITCH	
	S135	ESP0001-007	PUSH SWITCH	
	S136	ESP0001-007	PUSH SWITCH	
	S137	ESP0001-007	PUSH SWITCH	
	S138	ESP0001-007	PUSH SWITCH	
	S139	ESP0001-007	PUSH SWITCH	
	S140	ESP0001-007	PUSH SWITCH	
	S141	ESP0001-007	PUSH SWITCH	
	S142	ESP0001-007	PUSH SWITCH	
	S143	ESP0001-007	PUSH SWITCH	
	S144	ESP0001-007	PUSH SWITCH	
	S301	QST4241-E09	PUSH SWITCH	
	CX101	ECX0004-190KU	RESONATOR	
	CX121	ECX0004-000KU	RESONATOR	
	EP001	E70859-001	EARTH PLATE	
	EP002	E70859-001	EARTH PLATE	
	FC102	EMV7112-007	SOCKET WIRE	
	FC901	EMV7112-003	SOCKET WIRE	
	RY901	ESK1D12-113	RELAY	
	TP101	E67764-002	TERMINAL ASSY	
	TP121	E67764-002	TERMINAL ASSY	
	WT001	E67764-103	TERMINAL	
	WT002	E67764-202	TERMINAL	
	WT003	E67764-203	TERMINAL ASSY	
	WT003	E67764-203	TERMINAL ASSY	
	WT003	E67764-203	TERMINAL ASSY	D
	WT003	E67764-203	TERMINAL ASSY	EBS
	WT003	E67764-203	TERMINAL ASSY	F

⚠ : SAFETY PARTS

www.hifiengine.com

■ ENB-033□ P.C. Board Ass'y

Note: ENB-033□ varies according to the areas employed. See note (1) when placing an order.

Note (1)

P.C. Board Ass'y	Designated Areas
ENB-033 A	U.S.A. & Canada
ENB-033 B	Other countries

Note (2)
They symbols (赤、黒、白. . . . etc.) on P.C. Board sarface are factory process only.

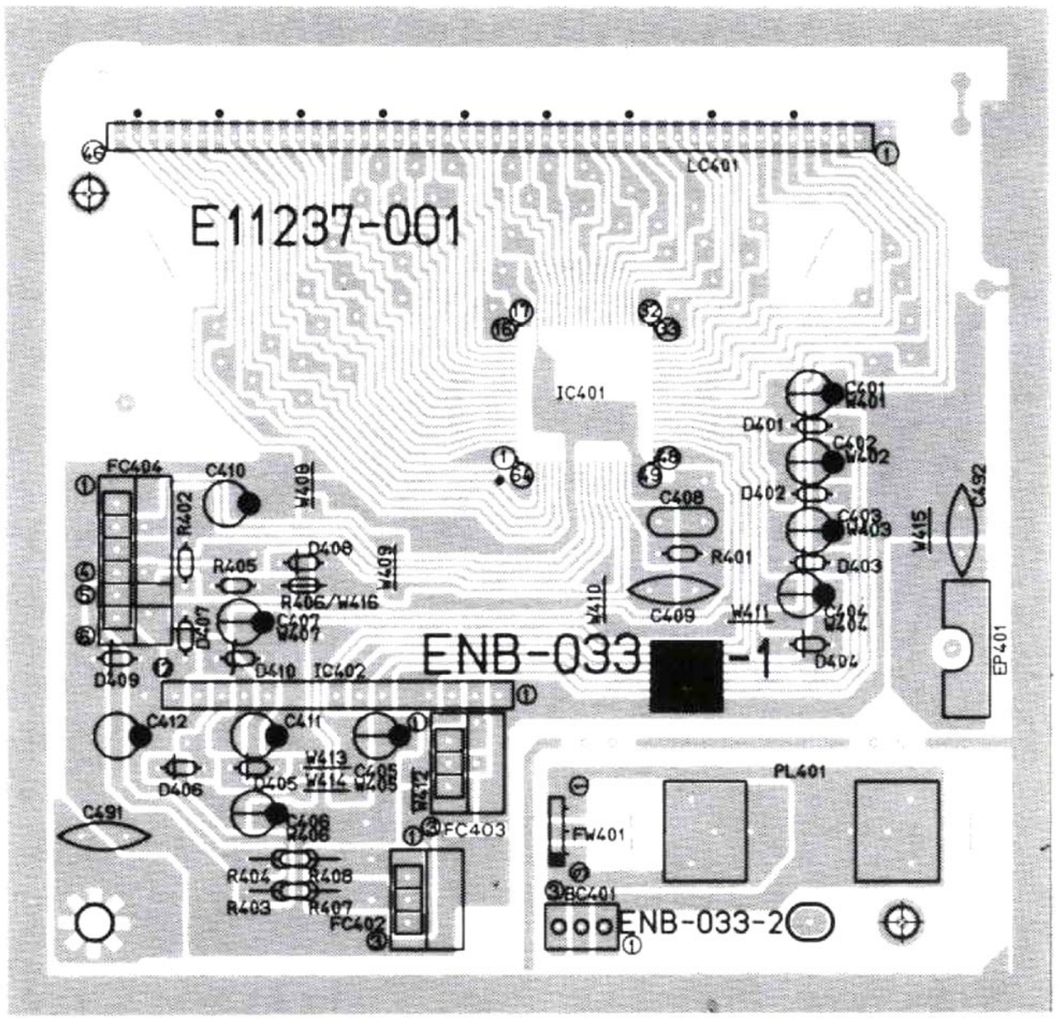

DIODES

⚠	ITEM	PART NUMBER	DESCRIPTION	MAKER	AREA
	D401	1SS133	SILICON	ROHM	
	D402	1SS133	SILICON	ROHM	
	D403	1SS133	SILICON	ROHM	
	D404	1SS133	SILICON	ROHM	
	D405	1SS133	SILICON	ROHM	
	D406	1SS133	SILICON	ROHM	
	D407	1SS133	SILICON	ROHM	
	D408	1SS133	SILICON	ROHM	

CAPACITORS

⚠	ITEM	PART NUMBER	DESCRIPTION			AREA
	C401	QETB1HM-474	0.47MF	50V	ELECTRO	
	C402	QETB1HM-474	0.47MF	50V	ELECTRO	
	C403	QETB1HM-474	0.47MF	50V	ELECTRO	
	C404	QETB1HM-474	0.47MF	50V	ELECTRO	
	C405	QETB1HM-474	0.47MF	50V	ELECTRO	
	C406	QETB1HM-474	0.47MF	50V	ELECTRO	
	C407	QETB1HM-474	0.47MF	50V	ELECTRO	
	C408	QFN81HJ-103	0.01MF	50V	MYLAR	
	C409	QCF21HP-223	0.022MF	50V	CERAMIC	
	C410	QETB1HM-475	4.7MF	50V	ELECTRO	
	C411	QETB1EM-106	10MF	25V	ELECTRO	
	C412	QETB1EM-106	10MF	25V	ELECTRO	

RESISTORS

⚠	ITEM	PART NUMBER	DESCRIPTION			AREA
	R401	QRD161J-273	27K	1/6W	CARBON	
⚠	R403	QRZ0062-390	39	1/4W	FUSIBLE	B
⚠	R404	QRD145J-390S	39	1/4W	UNF.CARBON	A
⚠	R404	QRZ0062-390	39	1/4W	FUSIBLE	B
	R405	QRD161J-121	120	1/6W	CARBON	

I. C. S

⚠	ITEM	PART NUMBER	DESCRIPTION	MAKER	AREA
	IC401	LC7560	I.C.	SANYO	
	IC402	7EL-SPI-001	I.C.	KYOCERA	

OTHERS

⚠	ITEM	PART NUMBER	DESCRIPTION	AREA
		E11237-001	CIRCUIT BOARD	
		E45524-002	FUSE CLIP	
	FC402	EMV7112-003	SOCKET WIRE	
	FC403	EMV7112-003	SOCKET WIRE	
	FC404	EMV7112-004	SOCKET WIRE	
	LC401	ELU0002-014	F.L.TUBE	

■ TPS-266C Voltage Selector P.C. Board Ass'y

Note: for U.S. Military Market & other Countries.

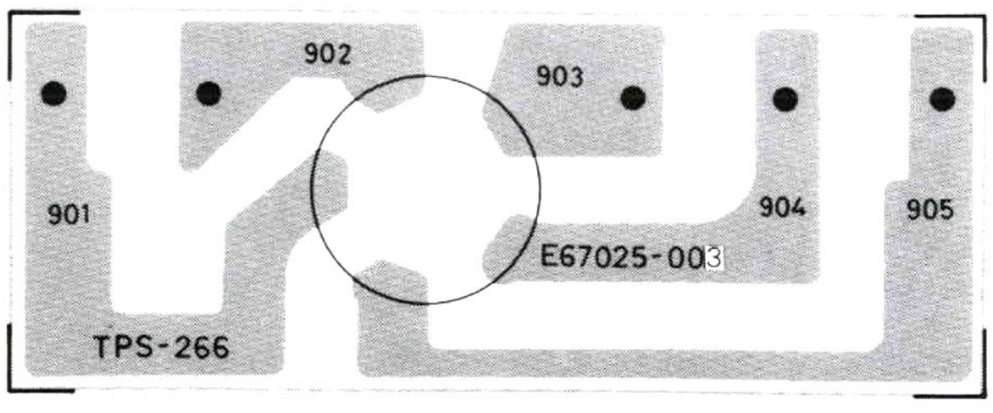

OTHERS

⚠	ITEM	PART NUMBER	DESCRIPTION	AREA
		E43727-002	TAB	
		E66342-001	HOLDER	
		E67025-003	CIRCUIT BOARD	
⚠		QSR0074-001	VOLTAGE SELECTOR	

www.hifiengine.com

Packing Materials and Part Numbers

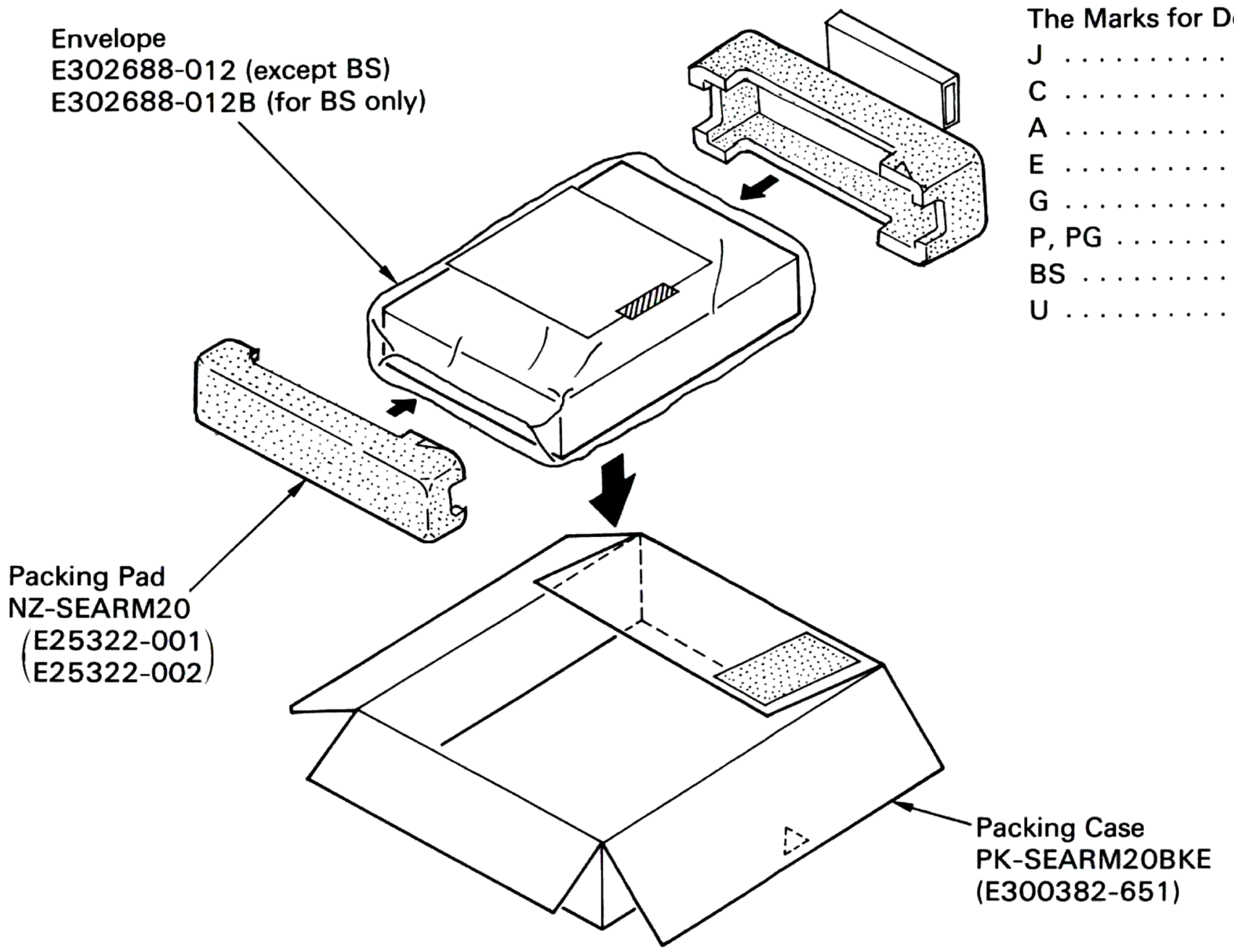

The Marks for Designated Areas

J	U.S.A.
C	Canada
A	Australia
E	Continental Europe
G	West Germany
P, PG	U.S. Military Market
BS	U.K.
U	Other Countries

Accessories List

Part Number	Part Name	Description	Areas
E30580-1293A	Instruction Book		except BS
E30580-1293ABS	Instruction Book		for BS only
E43486-222A	Connection Sheet		
E73088-001	Bracket	for Remote-Control unit	
RM-S20	Remote-Control unit		
UM-3(DJ)-2P	Battery	x2	
EWP302-101	Signal Cord	x4	
EWP805-001	1pin Plug Cord		
E04056	Siemens Plug		U,PG
E35497-019	Caution Sheet	220V	U,PG
E35497-017	Caution Sheet	110V	P
EMC0201-001BS	AC Plug		BS
BT20048B	Warranty Card	1year	J,P,PG
BT20046B	Service Information Card		J,P,PG
BT20044E	Safety Instruction Sheet		J
E66416-003	Envelope	for Warranty Card	J
BT20025H	Warranty Card		C
BT20071A	Service Center Card		C
BT20064	Warranty Card		G
BT20066	EEC Agency		G,BS
BT20054-006A	FTZ Information Sheet		G
BT20029C	Warranty Card		A
BT20060	Warranty Card		BS
E43486-165A	Instruction Sheet	for AC Plug	BS
E41202-2	Envelope	for Accessories	except BS
E41202-2B	Envelope	for Accessories	for BS only

www.hifiengine.com

IC701:TC9176P

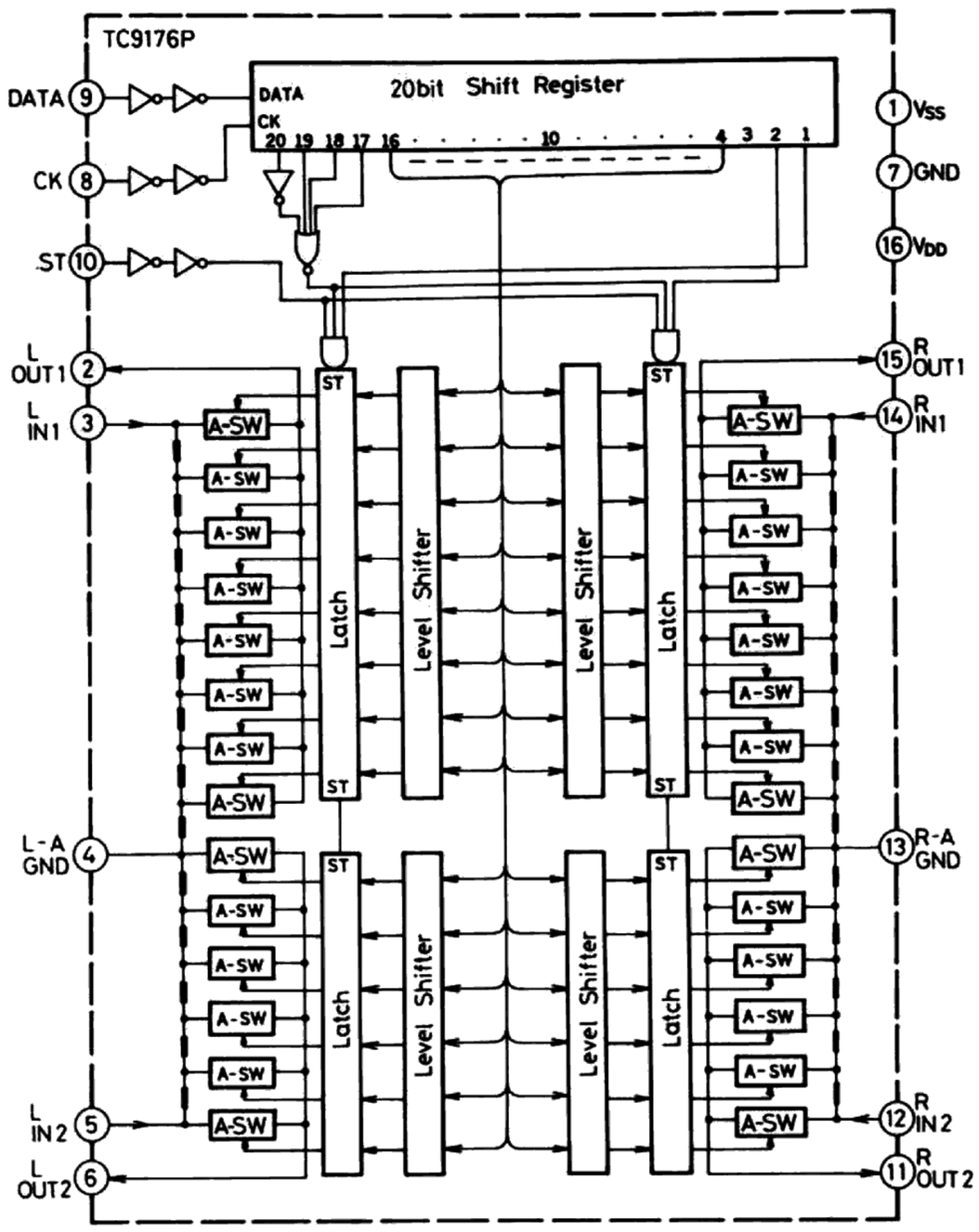

IC121:μPD7507HG-507

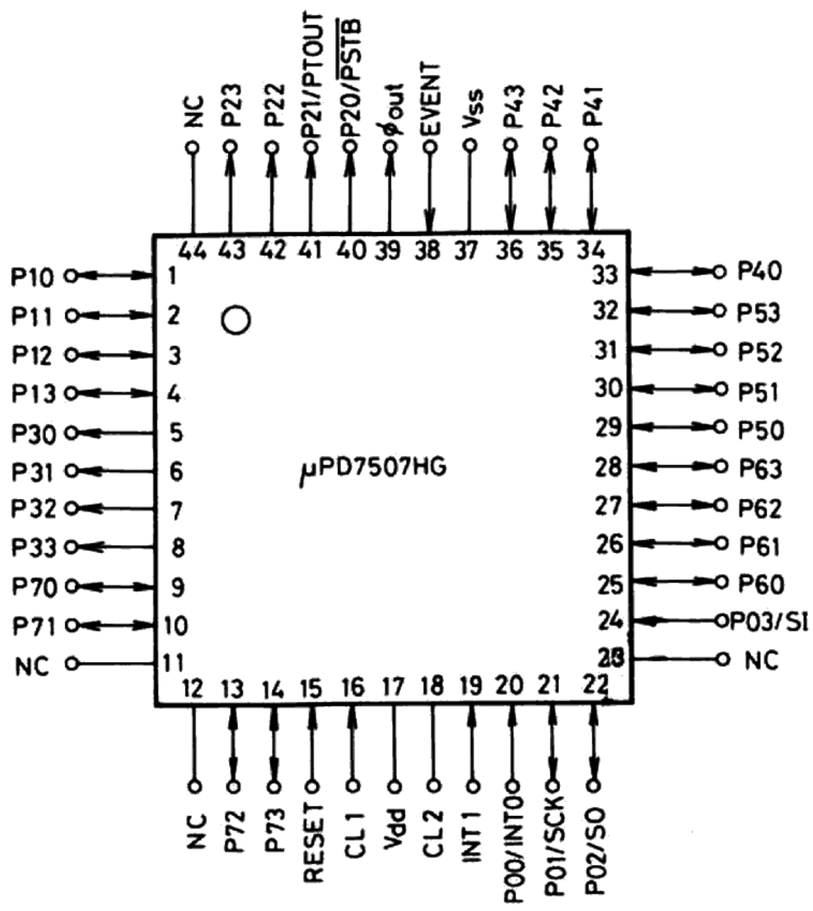

IC501:LC4966

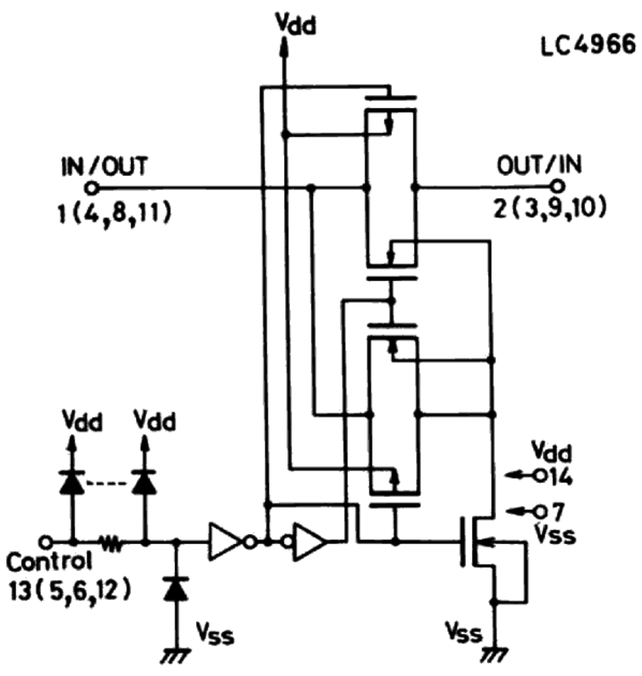

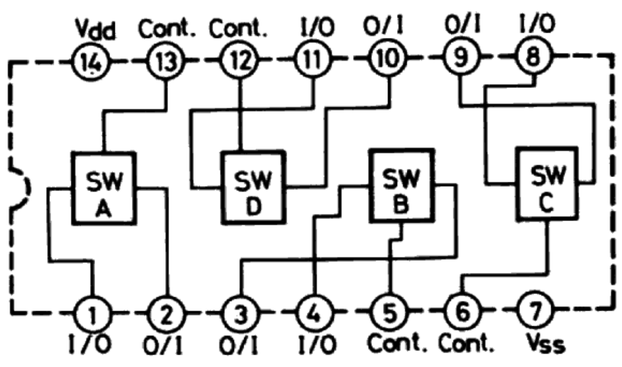

IC301:TC9162N

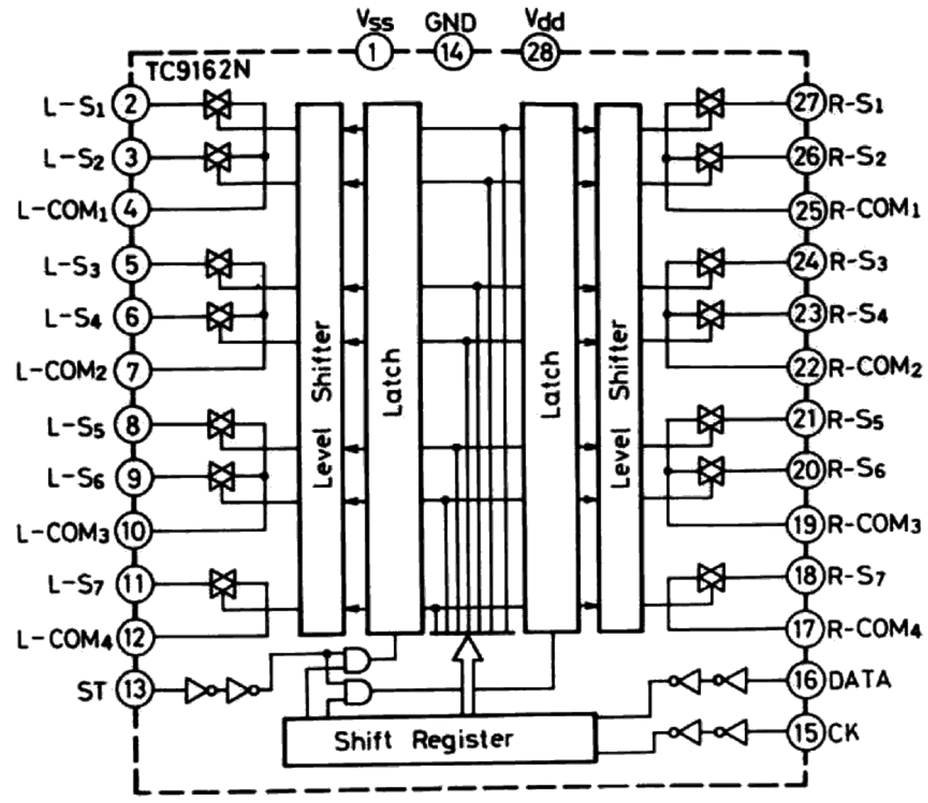

IC251, IC302, IC702, IC703:NJM4560DD
IC502:NJM4558D

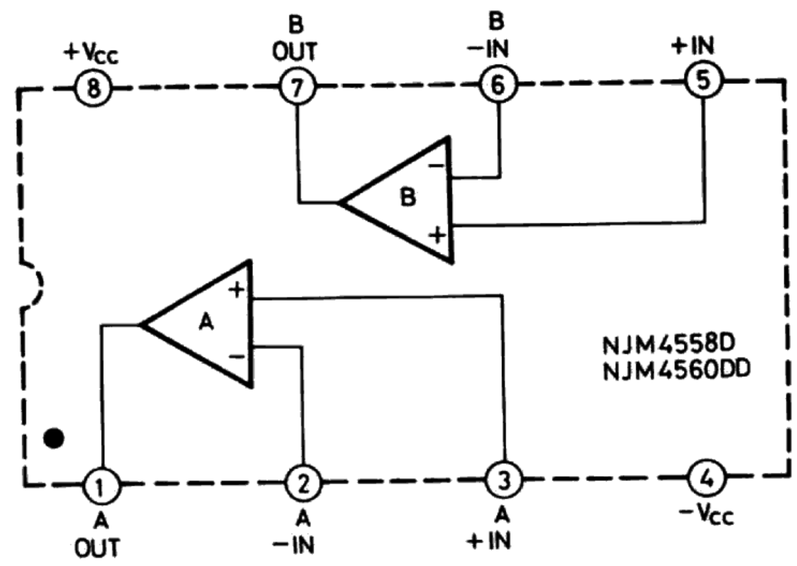

IC101:μPD7508HC-074

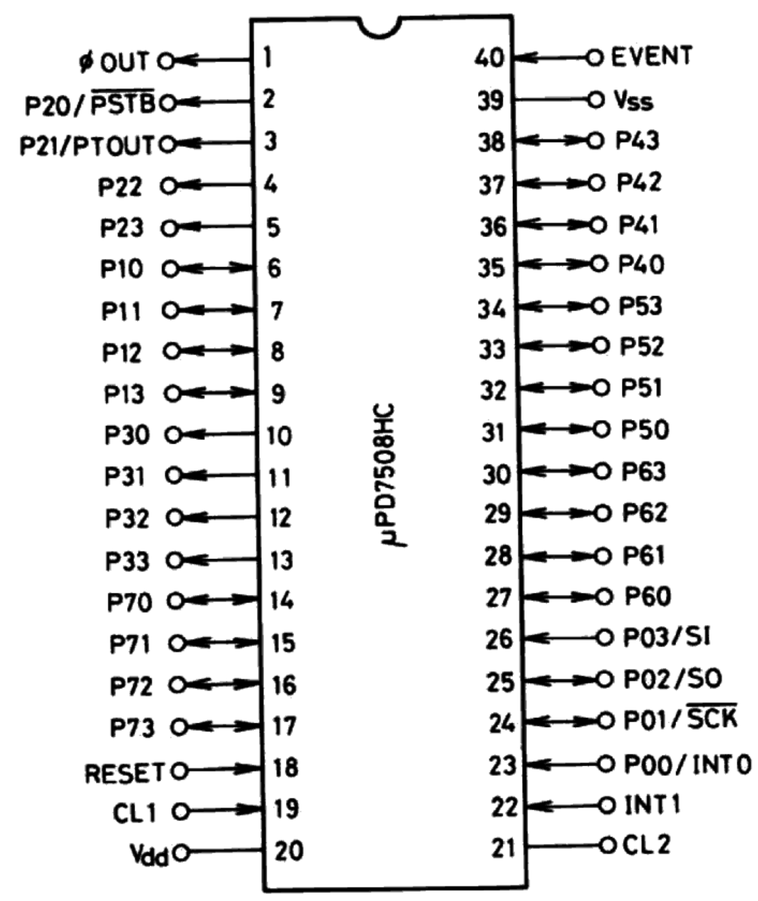

www.hifiengine.com

JVC
VICTOR COMPANY OF JAPAN, LIMITED
STEREO DIVISION, YAMATO PLANT, 1644, Shimotsuruma, Yamato-shi, Kanagawa-ken, 242, JAPAN

(No. 2893)

www.hifiengine.com