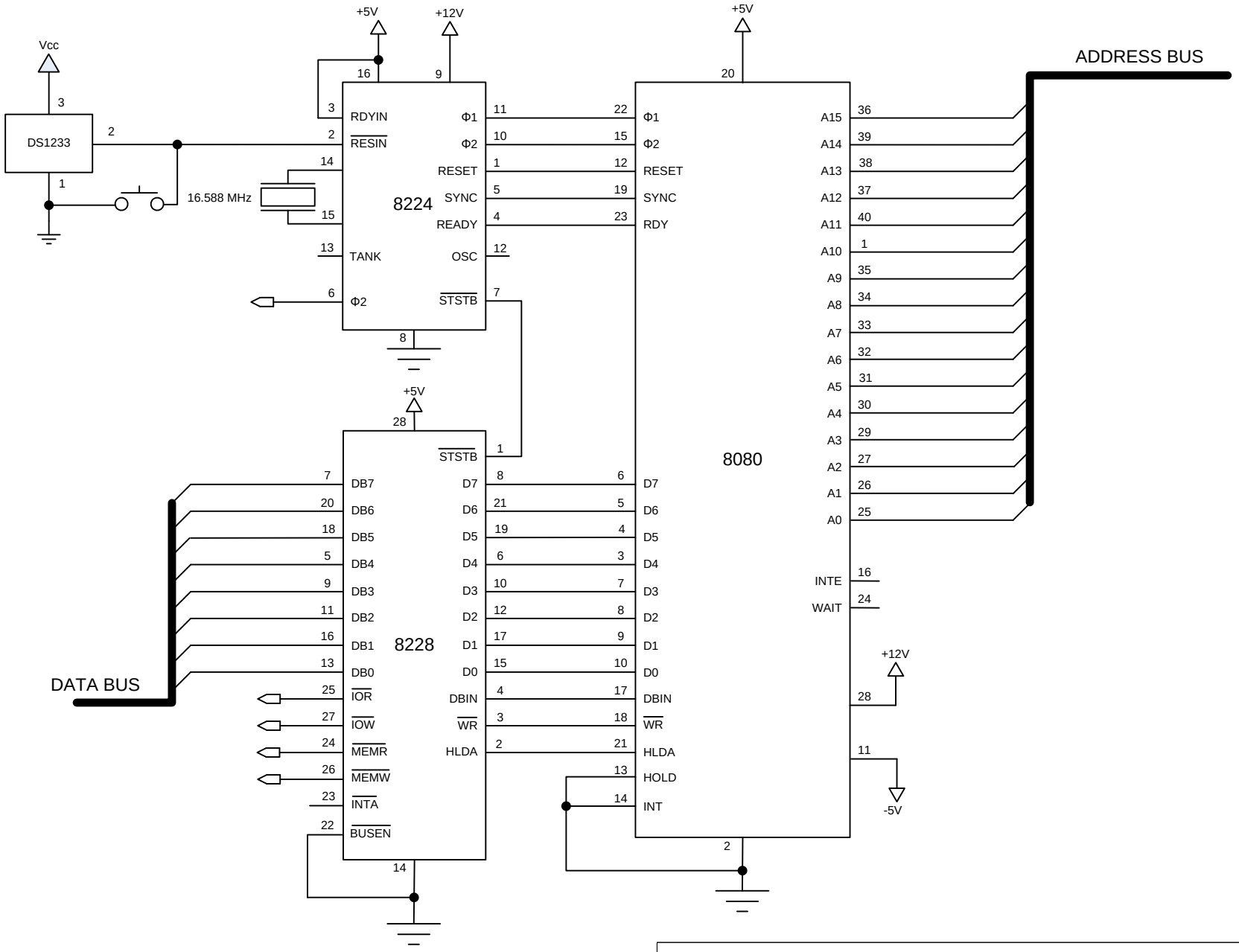

Note: 0.1 µF decoupling capacitors not shown.

CPU

Drawn by: jsl

Date:

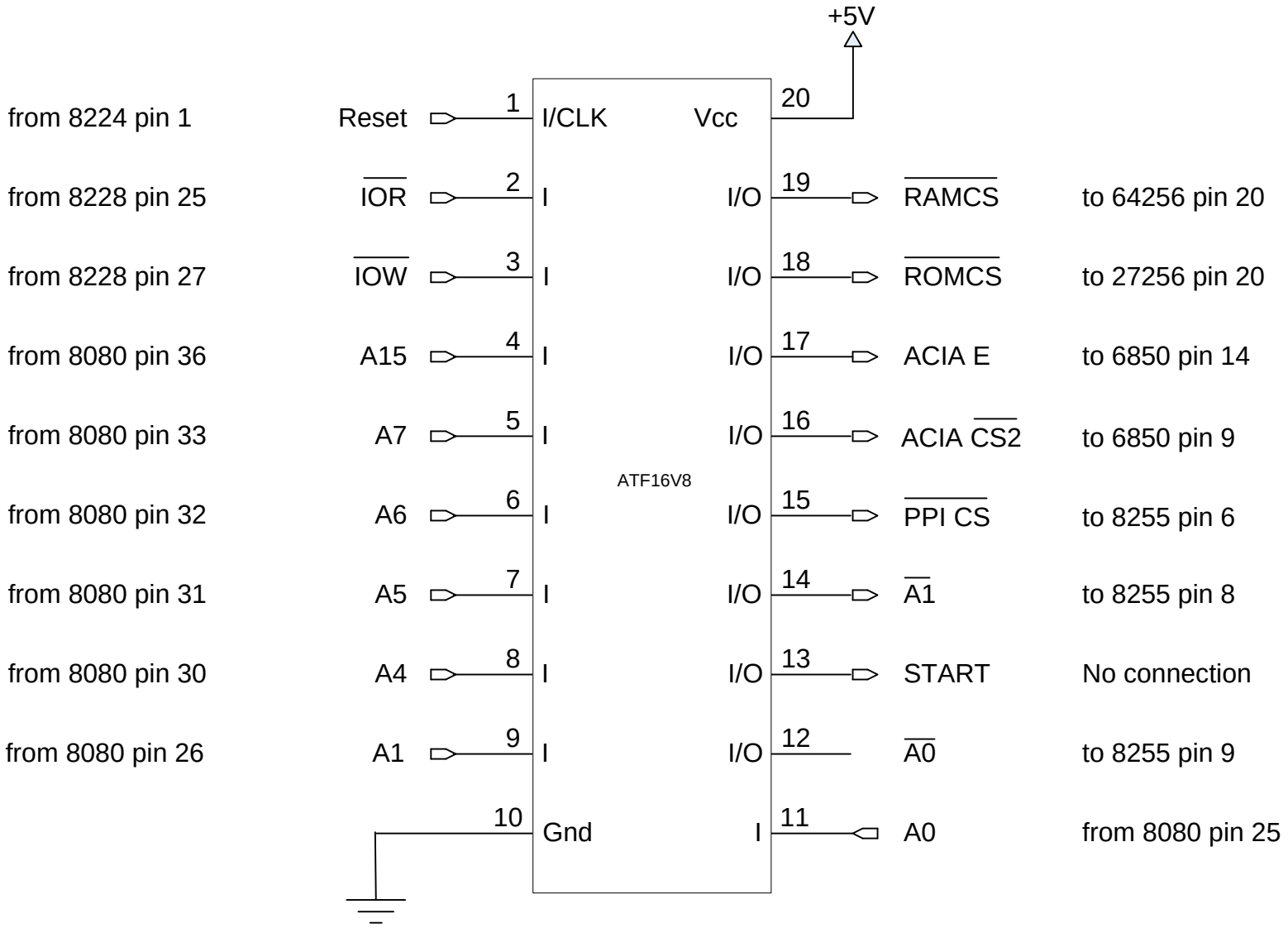

Note: 0.1 µF decoupling capacitors not shown.

GAL16V8

Drawn by: jsl

Date:

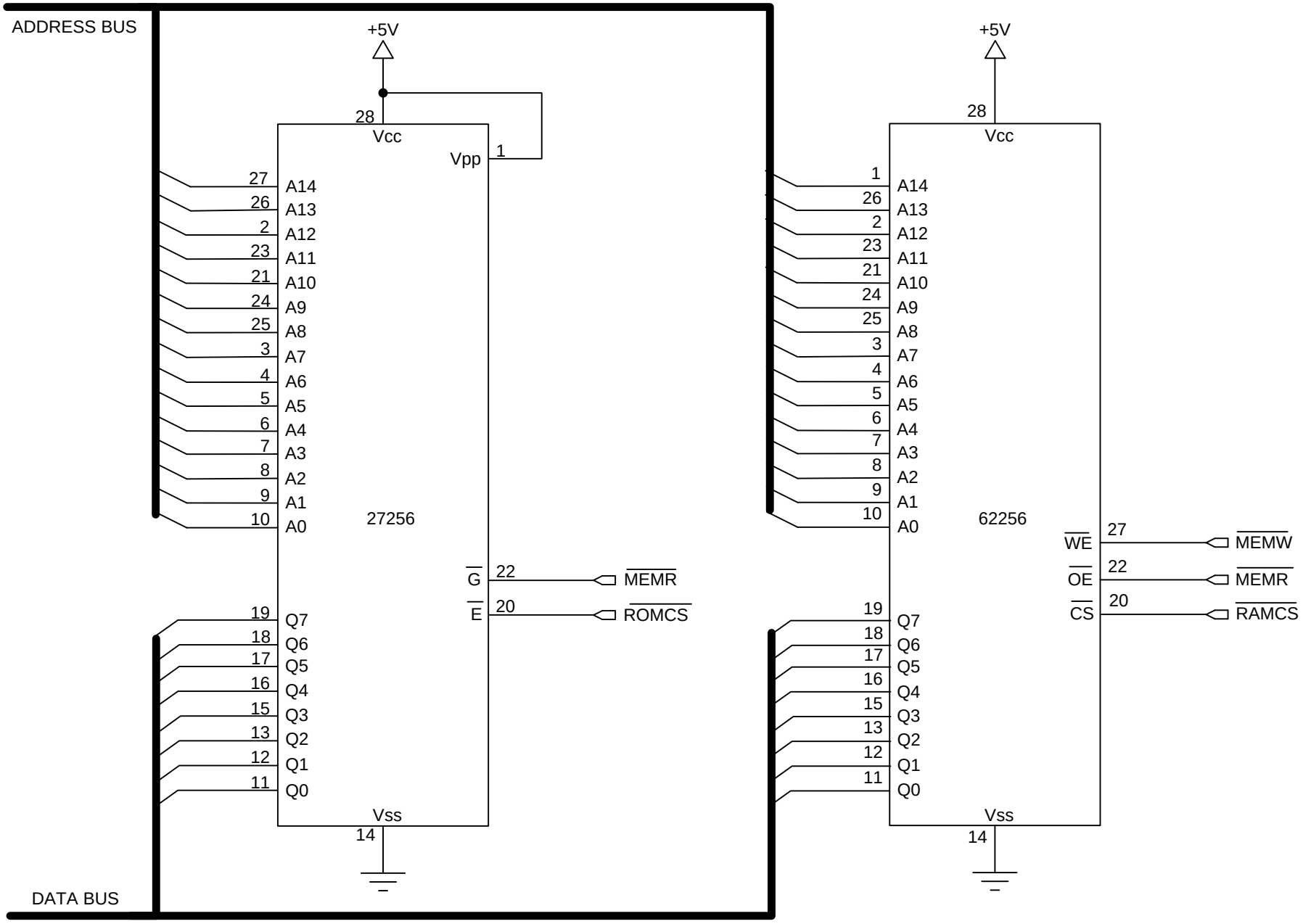

Note: 0.1 µF decoupling capacitors not shown.

Memory

Drawn by: jsl

Date:

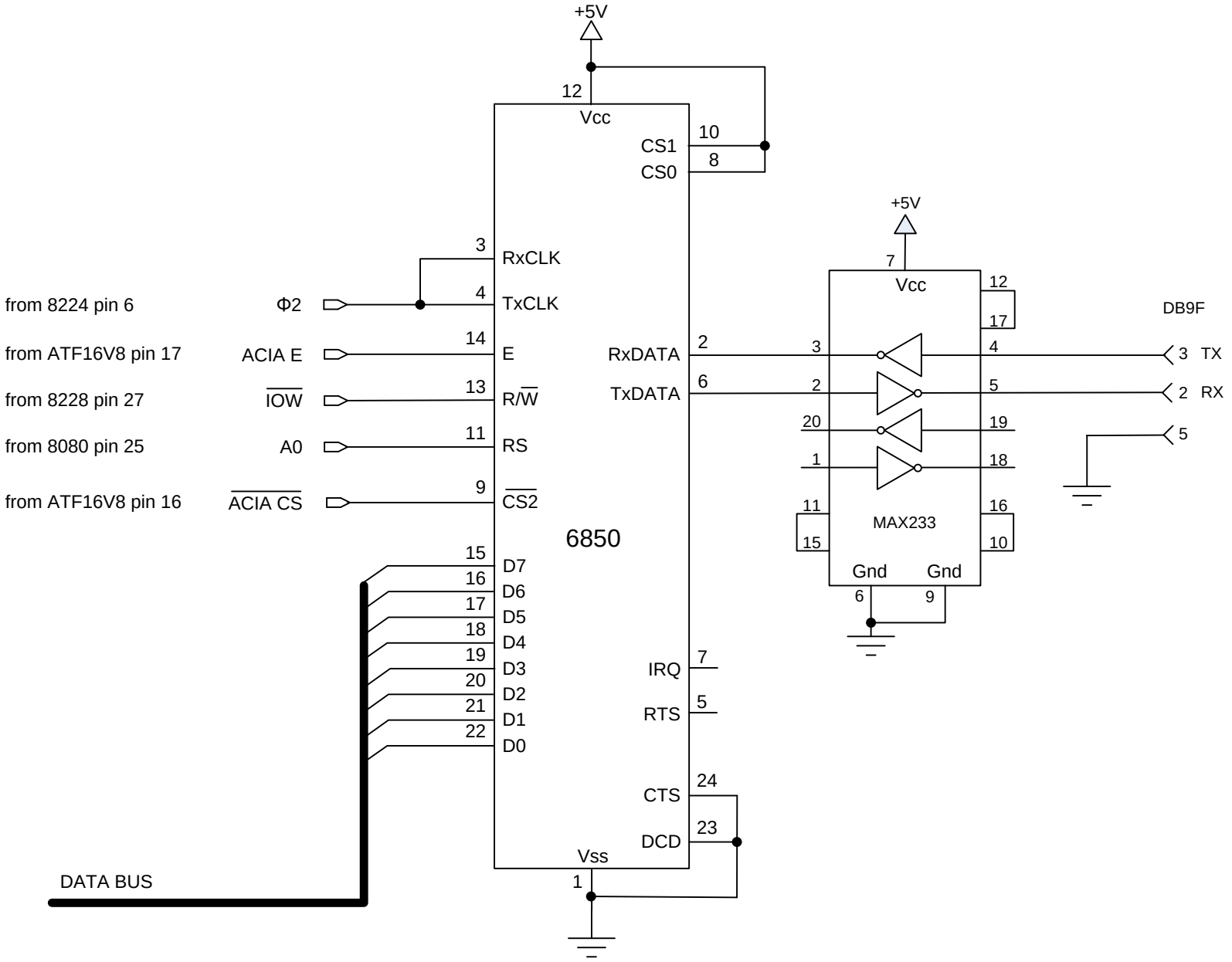

Note: 0.1 µF decoupling capacitors not shown.

ACIA

Drawn by: jsl

Date:

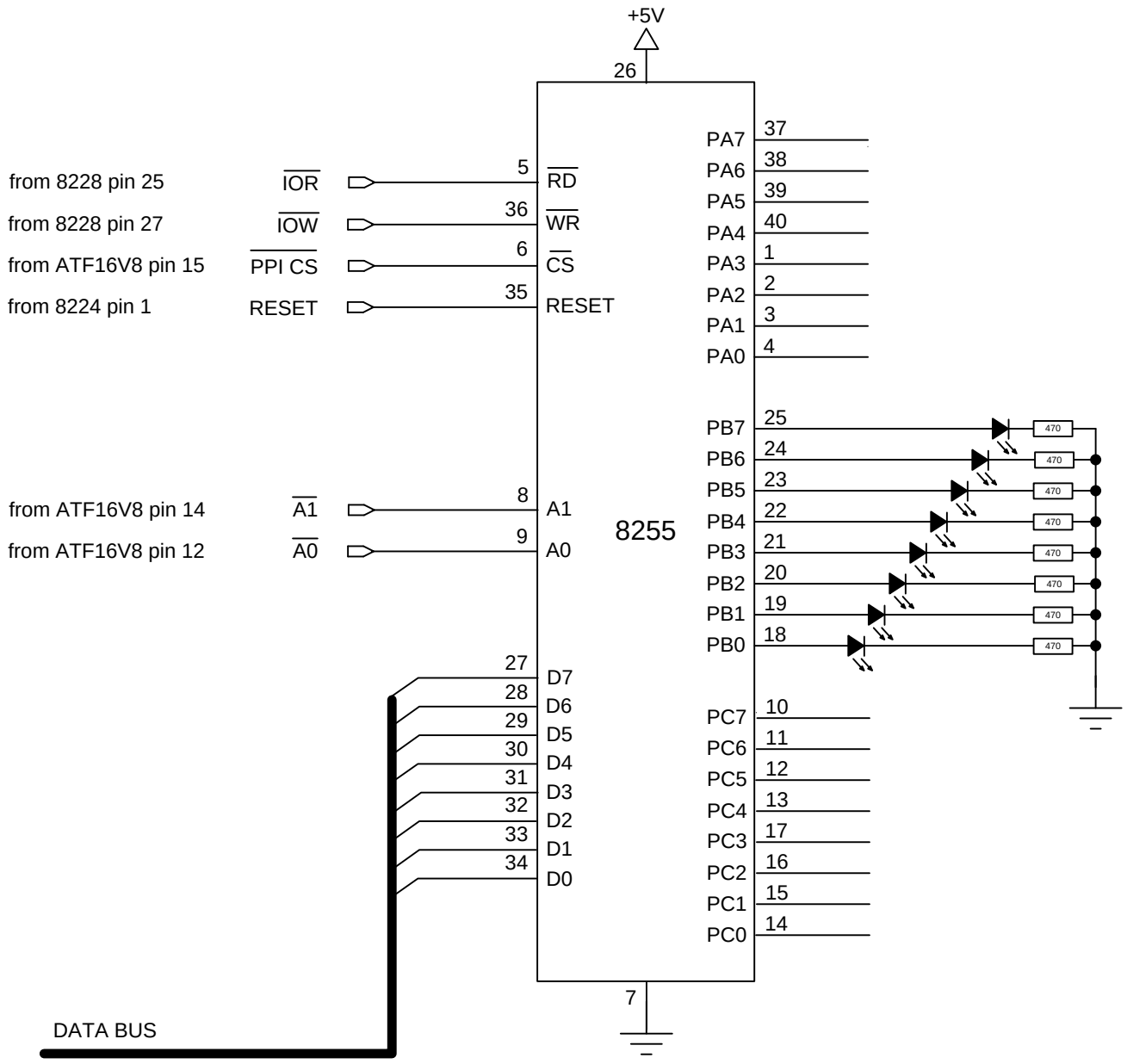

Note: 0.1 µF decoupling capacitors not shown.

8255 PPI

Drawn by: jsl

Date: