Model Exchange from Inventor to LabVIEW

University of California, Berkeley
Jonathan Shum

Inventor to LabVIEW

Our goal is to automate the workflow for the design and control of complex mechanical systems. We will need to move our Inventor model to the LabVIEW environment for simulation and control system design.

We can do this using the Functional Mockup Interface (FMI) standard, which simplifies the exchange of dynamic system models between different modeling, simulation, and co-simulation tools.

Modelica

Modelica is an open source equation based language used to model complex systems. It is used by many companies in the power and automotive industry.

Modelica Open Source Simulation Environments

OpenModelica Connection Editor (OMEdit): Linked text and graphical editor with simulation environment.

JModelica: Python package with improved support for FMI 2.0 Model Exchange and Co-Simulation.

FMI Standard 2.0

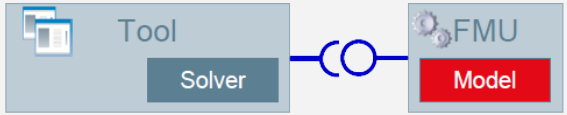

We can use this interface to evaluate the equations in different simulation environments and embedded control systems. Functional Mockup Interface allows for Model Exchange and Co-Simulation.

Model Exchange: Describes the dynamic system using differential, algebraic, discrete time equations.

Co-Simulation: Contains both the model and the solver. Also able to perform real-time data transfer between software environments.

FMI Toolbox available for MATLAB/SIMULINK, Dymola, Wolfram SystemModeler, LabVIEW, MapleSim, Python, and more.

Step 1: Inventor Model

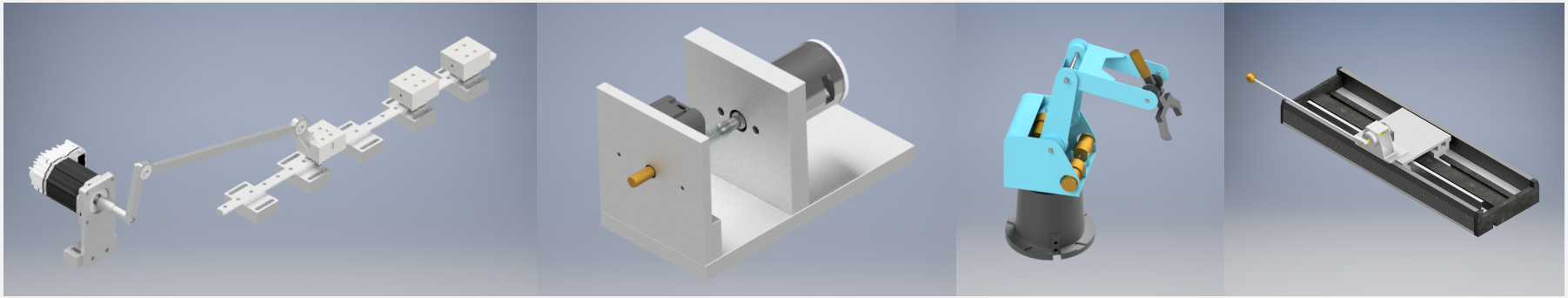

Things to Keep in Mind

Organize Using Subassemblies: Fix parts with no relative movement together

Remove Redundant Constraints: Unnecessary joints add complexity

Step 2: Autodesk Inventor to Modelica Trans

Prototype translator uses Autodesk Dynamic Motion Addin API to map Inventor assemblies into Modelica models.

Software Capabilities

Simplifying Rigid Bodies: Replace with Point Masses Located at Center of Mass

Recognizing Basic Joints: Revolute, Prismatic, Cylindrical, Spherical, Planar, Rigid

Calculating Degrees of Freedom: Between Parts Defined by Multiple Constraints

Grouping Rigid Components: Based on Mass Properties and Large Differentials

Step 3. Adding Multimedia Elements in Modelica

Take advantage of the **Modelica Standard Library** for ready-to-use components. (Several commercial libraries and system specific libraries are also available)

Fill in the Gaps

Missing Rigid Body Dynamics: Rigid Bodies, Friction, Gears, 3D Joints

Electronics: Sensors, Machines, Circuits, Analog, Digital

Complex Properties: Thermal, Fluid, Magnetic Components

Input and Output Terminals: Interfaces Crucial for Block Diagrams in LabVIEW

Step 4. Exporting an FMU

Functional Mockup Unit (FMU) is the file type that adheres to the Functional Mockup Interface protocol and is the file we use to export and import our model. FMU files contain a combination of compiled C-code and xml-files.

JModelica is currently the only successful open source Modelica platform able to reliably convert modelica code into FMU files.

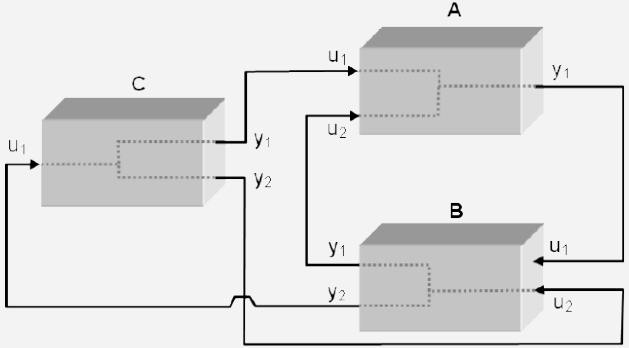

Step 5. LabVIEW VI

Import the FMU into a **LabVIEW Control & Simulation Loop** as a plant model and add observe the response of the system.

Also able to adjust system parameters without having to export another FMU.

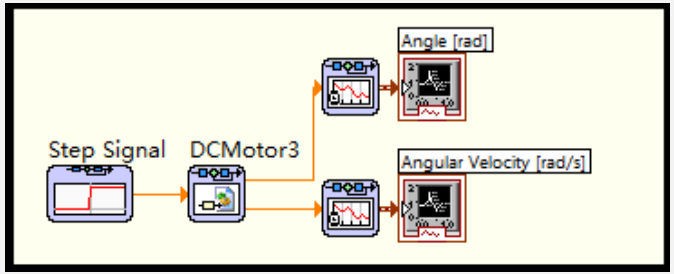

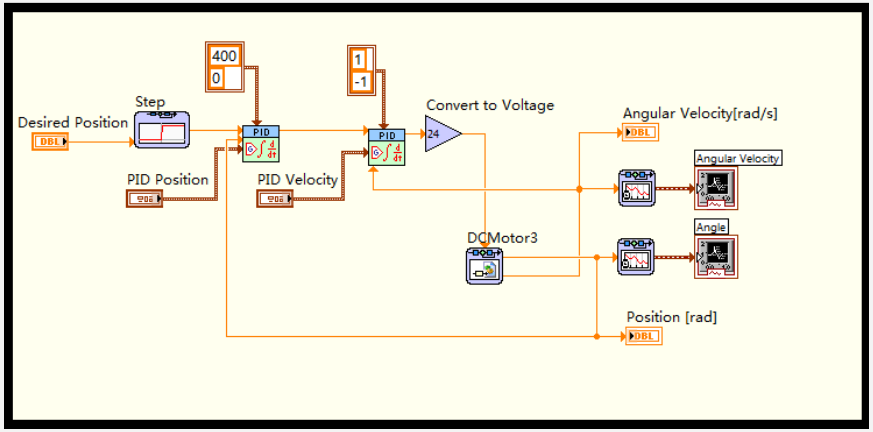

Testbeds

Six separate testbeds to demonstrate various properties of complex mechanical systems. We will look at specific advantages and challenges of transferring each Inventor model into LabVIEW.

DC Motor Test Stand

Inverted Pendulum

Five Axis Serial Robotic Arm

Go-Cart Drivetrain

Go-Cart Steering

Slider Crank

Common Challenges

Modeling

Multimedia elements

Rigid bodies & 3D contacts

Kinematic loops and redundant constraints

Verifying Simulations

Experimental system parameters

System behavior

Visualizations

DC Motor Test Stand

Advantages

Single degree of freedom

Neglect rigid bodies

Challenges

Modeling electronics

Connecting electronics to mechanical components

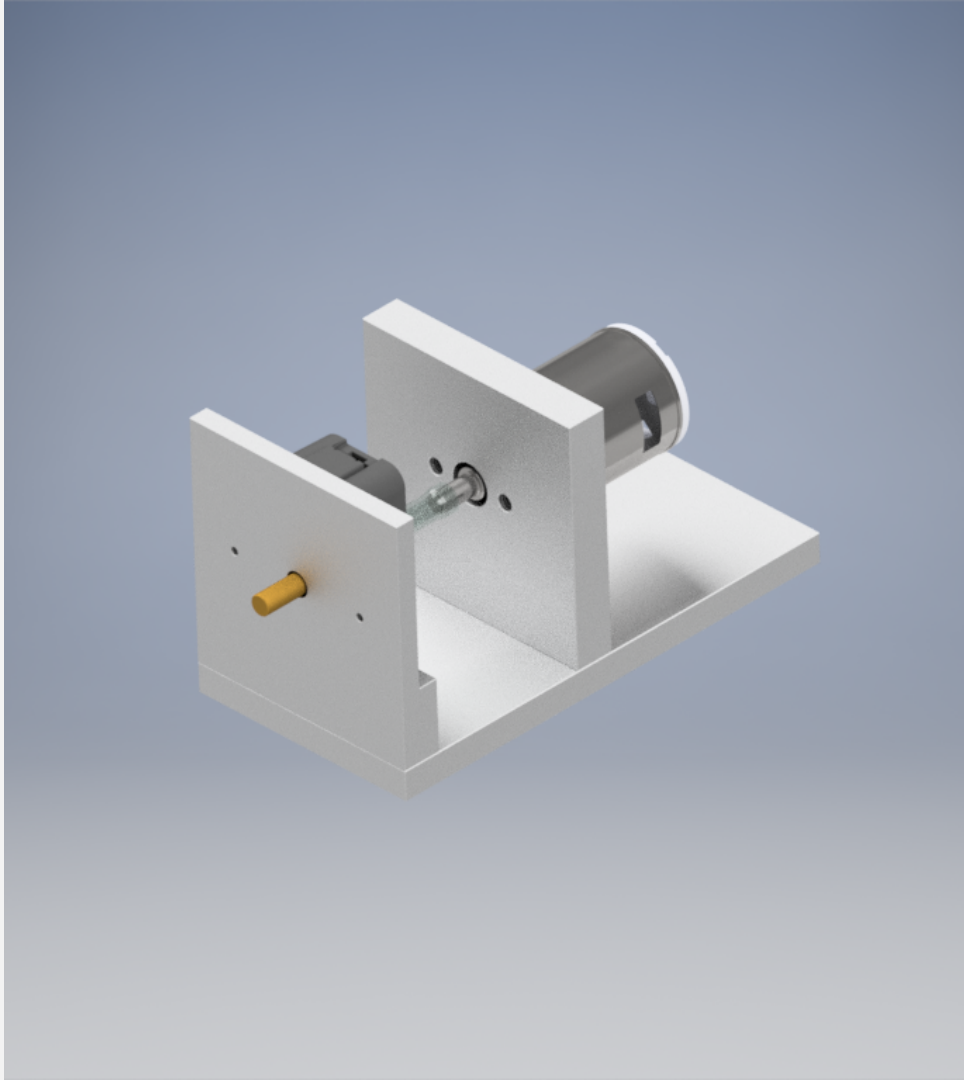

Inverted Pendulum

Advantages

Few constraints

System can be modeled as point masses

Easy to compare simulation

Challenges

Highly unstable system

Modeling friction forces

Experimental data

Five Axis Serial Robotic Arm

Advantages

Directly driven revolute joints

Challenges

Unstable inverted pendulum

Many degrees of freedom

Modeling friction forces: gear reduction, backlash

Complex gripper mechanism

Go-Cart Drivetrain

Advantages

Single axis to control

Challenges

Wheel dynamics

Modeling rigid bodies

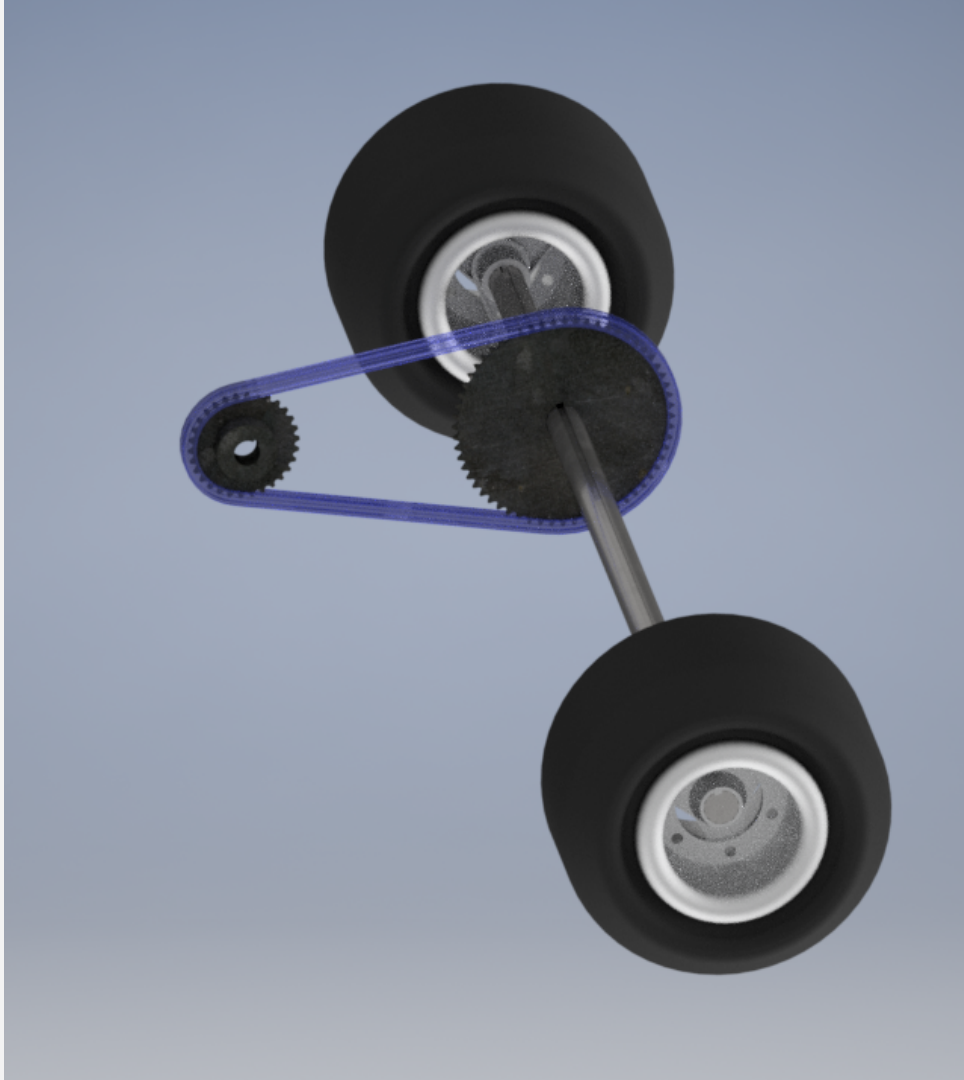

Go-Cart Steering

Advantages

Single axis to control

Challenges

Complex 5 bar mechanisms

Wheel dynamics

Modeling rigid bodies

Kinematic loops

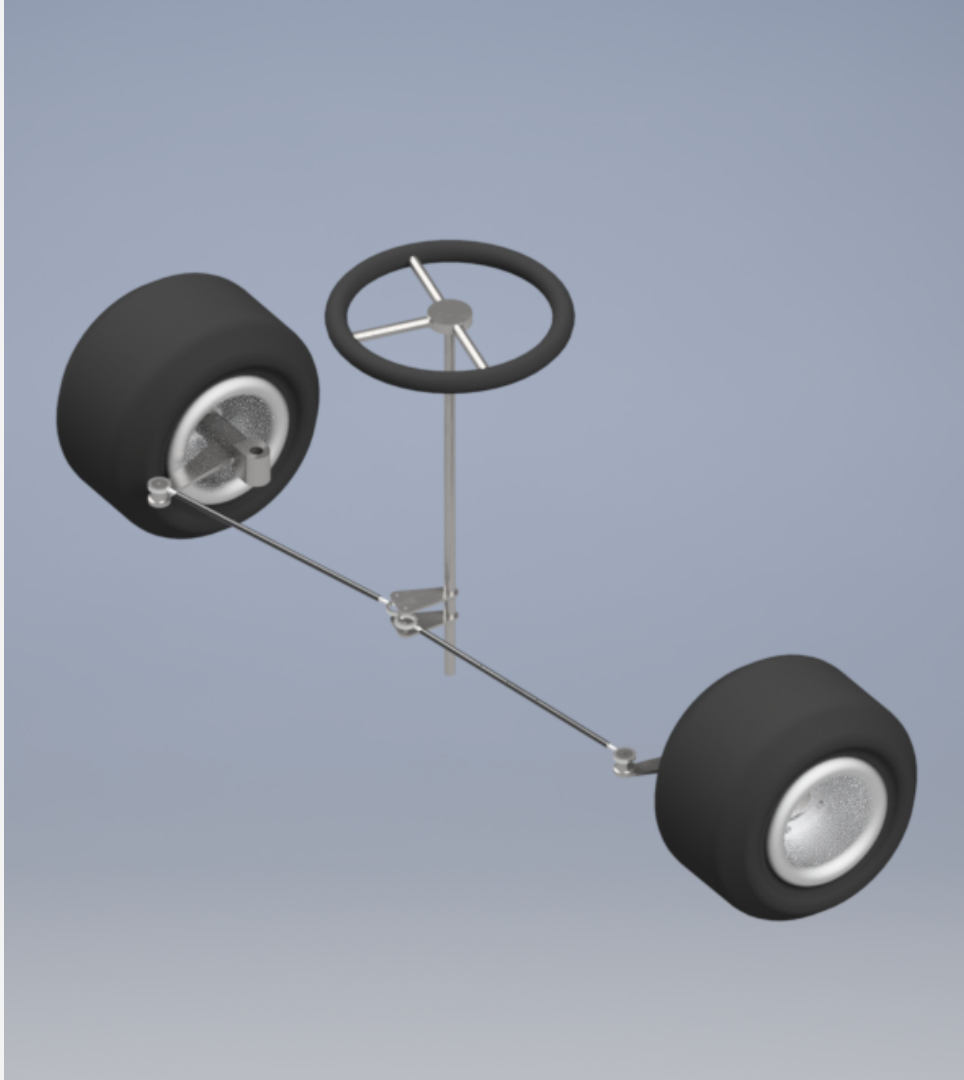

Slider Crank

Advantages

Single axis to control

Design project

Challenges

Modeling rigid bodies

Springs and 3D contacts

Fixed positions in space

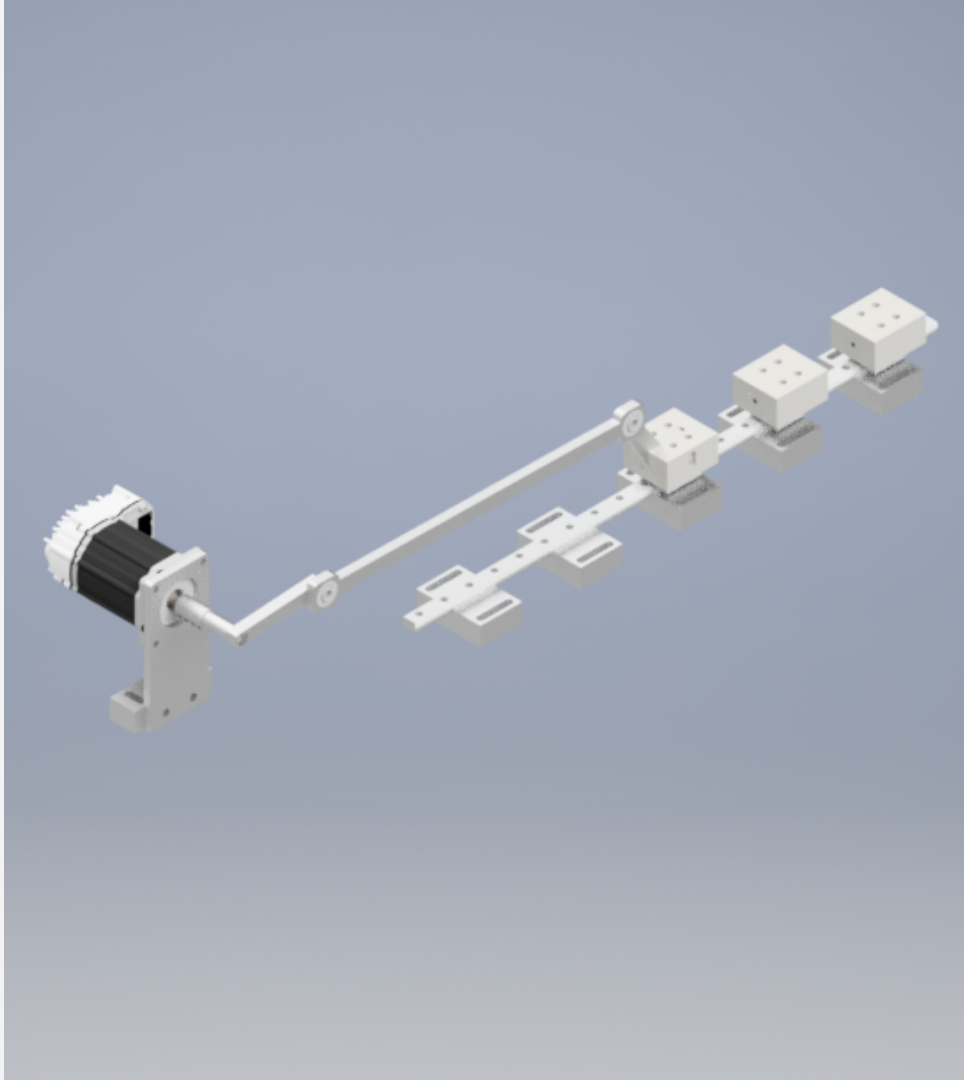

Possible Directions

Embed Modelica Packages into Autodesk Inventor

Include the ability to add multimedia components in the CAD process and provide a detailed simulation environment.

FMI for Co-Simulation

Couples multiple simulation tools together with runnable code.
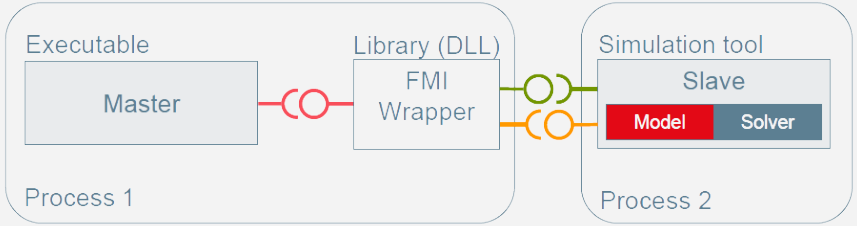
In theory able to support real-time visualizations with Autodesk Inventor using direct simulation data from NI LabVIEW.