to my mom,
on her birthday

DEMAREST

for Sam Solomon and the
Boston University Tanglewood Institute
Young Percussion Ensemble

Josiah Wolf Oberholtzer (1984)

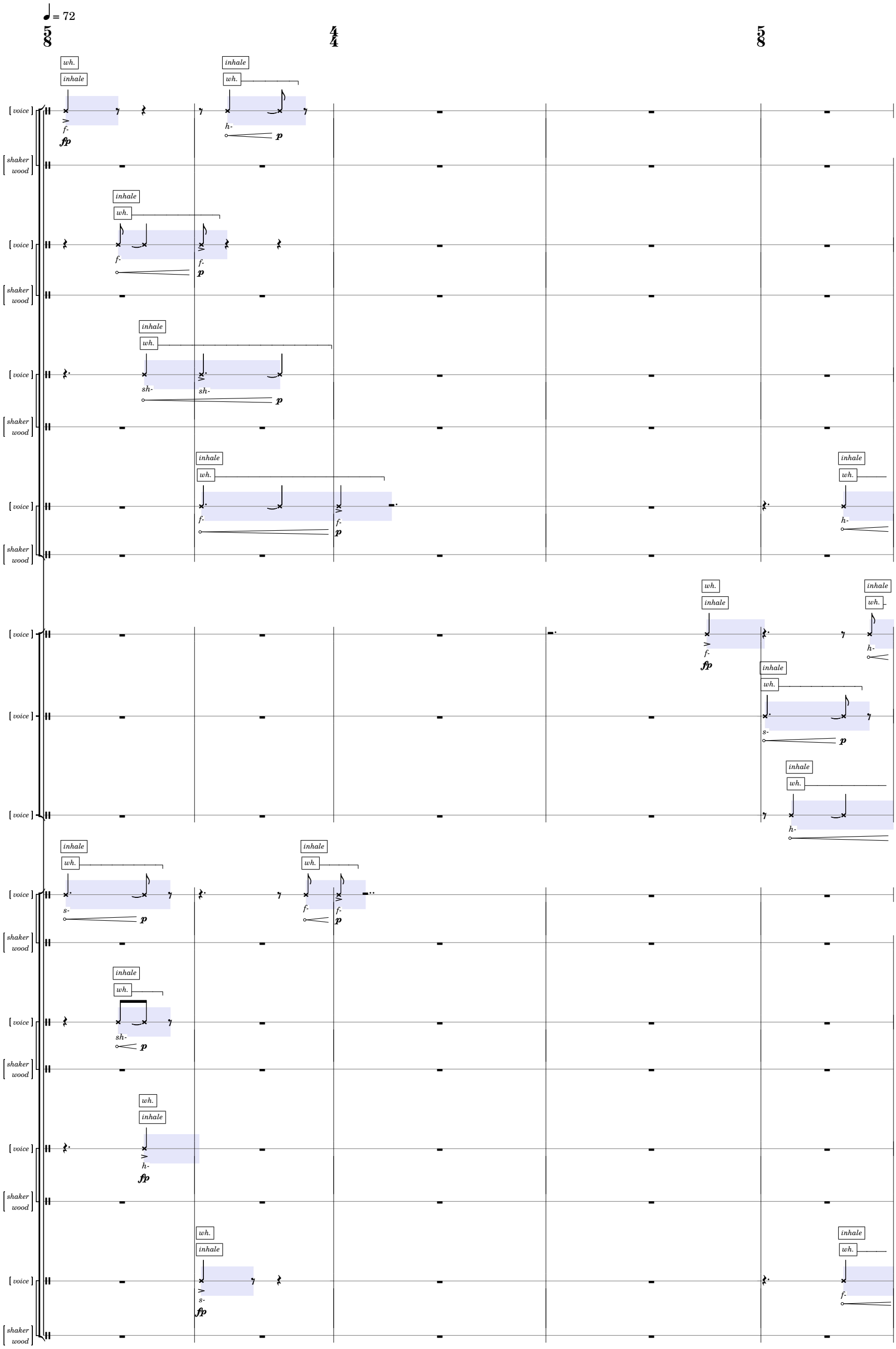

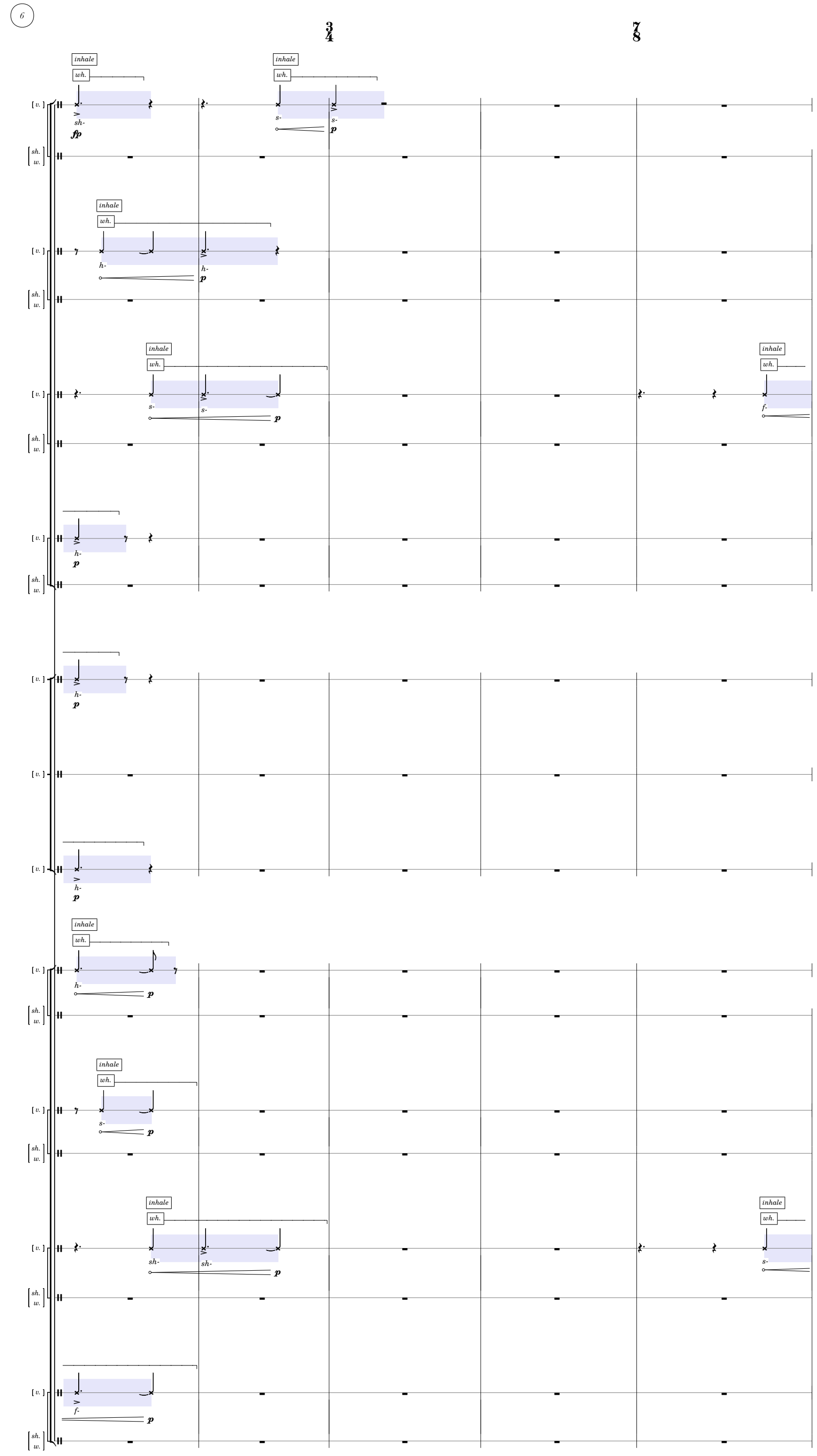
6
3/4
7/8
inhale
wh.
sh-
fp
s-
p
h-
sh.
w.
v.
f-

11

5/8 4/4 5/8 3/4

[v.] [sh. w.]

inhale wh. f- f- p

inhale wh. sh- sh- p

inhale wh. s- fp

wh. sh- p

wh. ch- p

inhale wh. f- p

inhale wh. h- h- p

inhale wh. sh- p

wh. inhale s- fp

inhale wh. sh- p

inhale wh. s-

inhale wh. f- f- f- p

inhale wh. sh- p

inhale wh. s-

inhale wh. sh- p

inhale wh. s- p

wh. inhale f- fp

inhale wh. h- p

wh. t- p

wh. ch- p

inhale wh. s- s- p

inhale wh. f- p

inhale wh. h- fp

inhale wh. sh- p

wh. s- p

16

7/8

5/8

[v.]
[sh. w.]
[v.]
[sh. w.]
[v.]
[sh. w.]
[v.]
[sh. w.]
[v.]
[sh. w.]
[v.]
[sh. w.]
[v.]
[sh. w.]
[v.]
[sh. w.]

inhale wh. sh- p
wh. inhale f- fp
inhale wh. h-
inhale wh. sh- fp
inhale wh. s-
wh. inhale f- fp
wh. inhale h- fp
s- p
inhale wh. f- fp
inhale wh. h- fp
inhale wh. sh- p
sh- p
wh. inhale f- fp
inhale wh. f- p
wh. inhale sh- fp
inhale wh. sh-
inhale wh. h- fp
wh. inhale s- fp

20

4/4 7/8 5/8

[v.] [sh. w.]

inhale wh. s- p
wh. f- p
wh. s- p
wh. h- p
wh. t- p
wh. ch- p
wh. s- p
wh. sh- p
wh. s- p
wh. f- p
wh. s- p
wh. inhale sh- fp
wh. inhale s- p
inhale wh. h- p
inhale wh. sh- p
inhale wh. s- fp
inhale wh. f- p
wh. inhale h- fp
inhale wh. sh- p
inhale wh. h- p
wh. ch- p
wh. inhale s- p
wh. s- p
wh. f- p
wh. sh- p
wh. f- p
inhale wh. sh- p
wh. inhale f- fp
wh. sh- p
inhale wh. h- p

25

♩ = 96

4/4 A

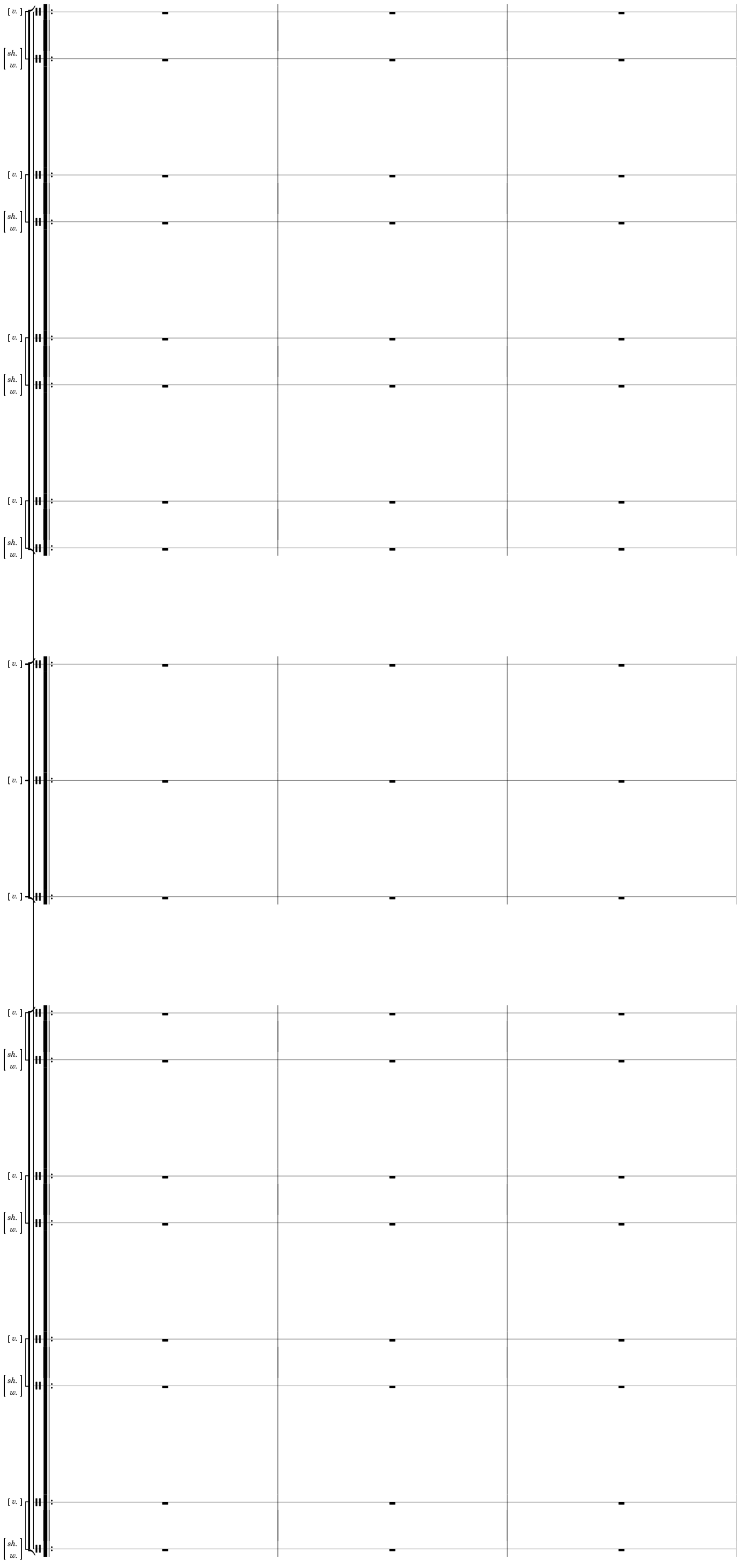

28

31

34

85

[v.]
[sh.
w.]
[v.]
[sh.
w.]
[v.]
[sh.
w.]
[v.]
[sh.
w.]
[v.]
[v.]
[v.]
[v.]
[sh.
w.]
[v.]
[sh.
w.]
[v.]
[sh.
w.]
[v.]
[sh.
w.]

38

♩ = 72

3/4 B

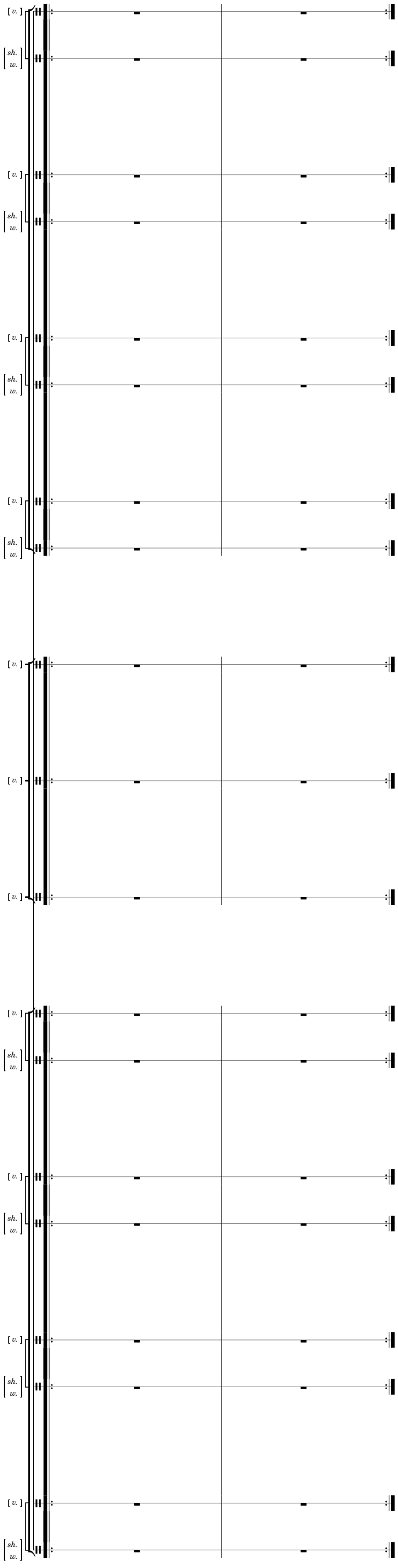

40

♩ = 64

4/4 C

[v.]
[sh.
w.]
[v.]
[sh.
w.]
[v.]
[sh.
w.]
[v.]
[sh.
w.]
[v.]
[v.]
[v.]
[sh.
w.]
[v.]
[sh.
w.]
[v.]
[sh.
w.]
[v.]
[sh.
w.]

44

47

50

53

57

61

85

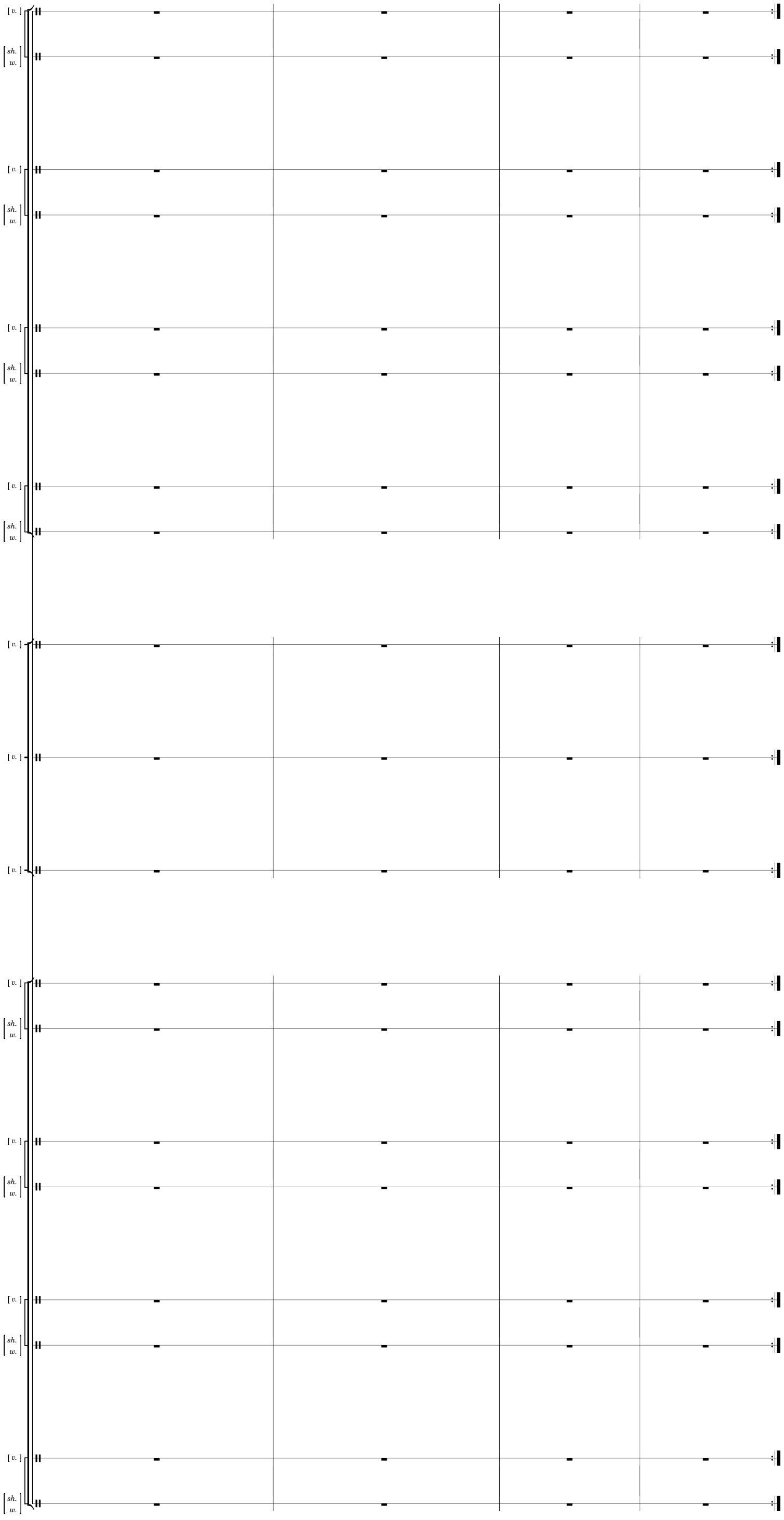

65

♩ = 48

4/4 D

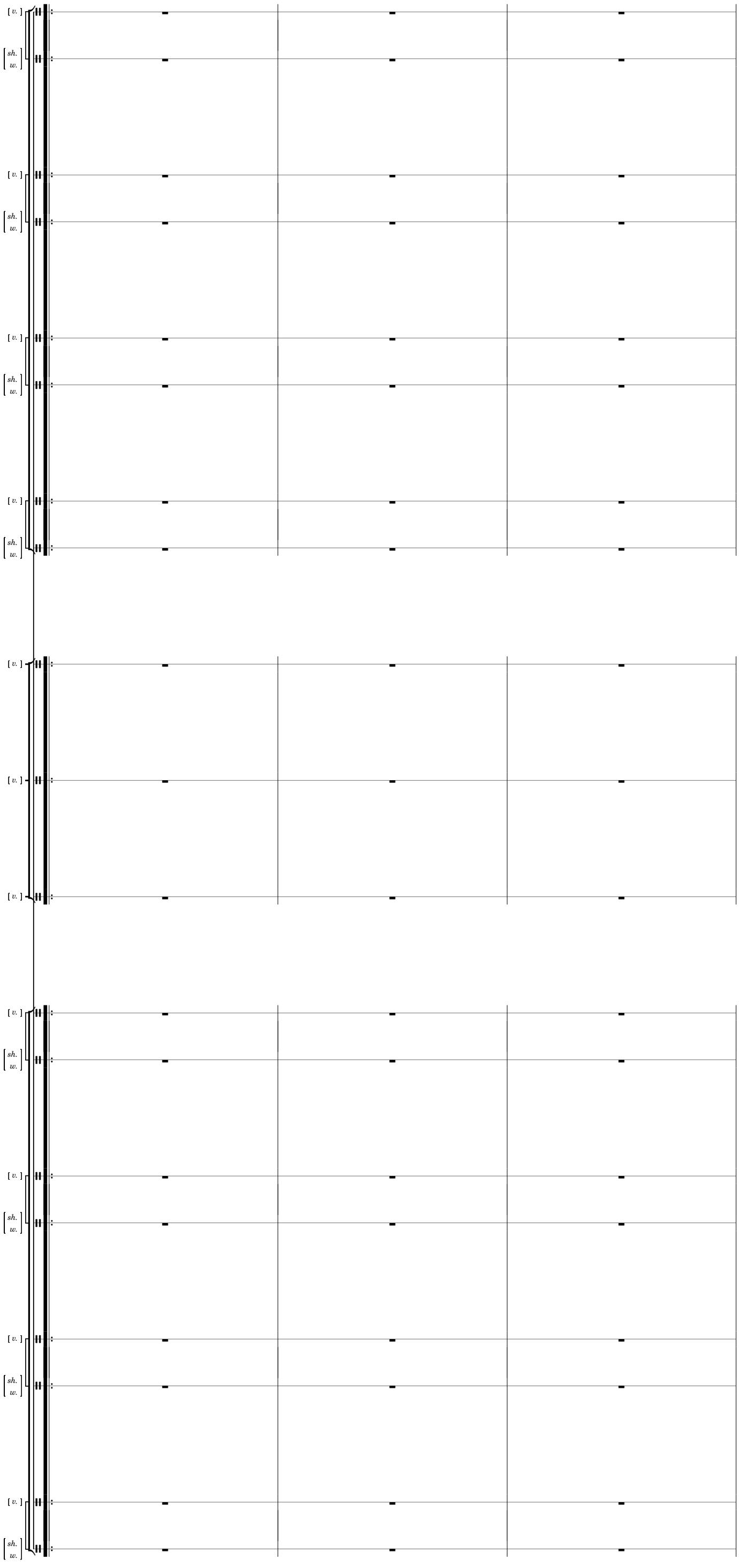

68

71

74

85

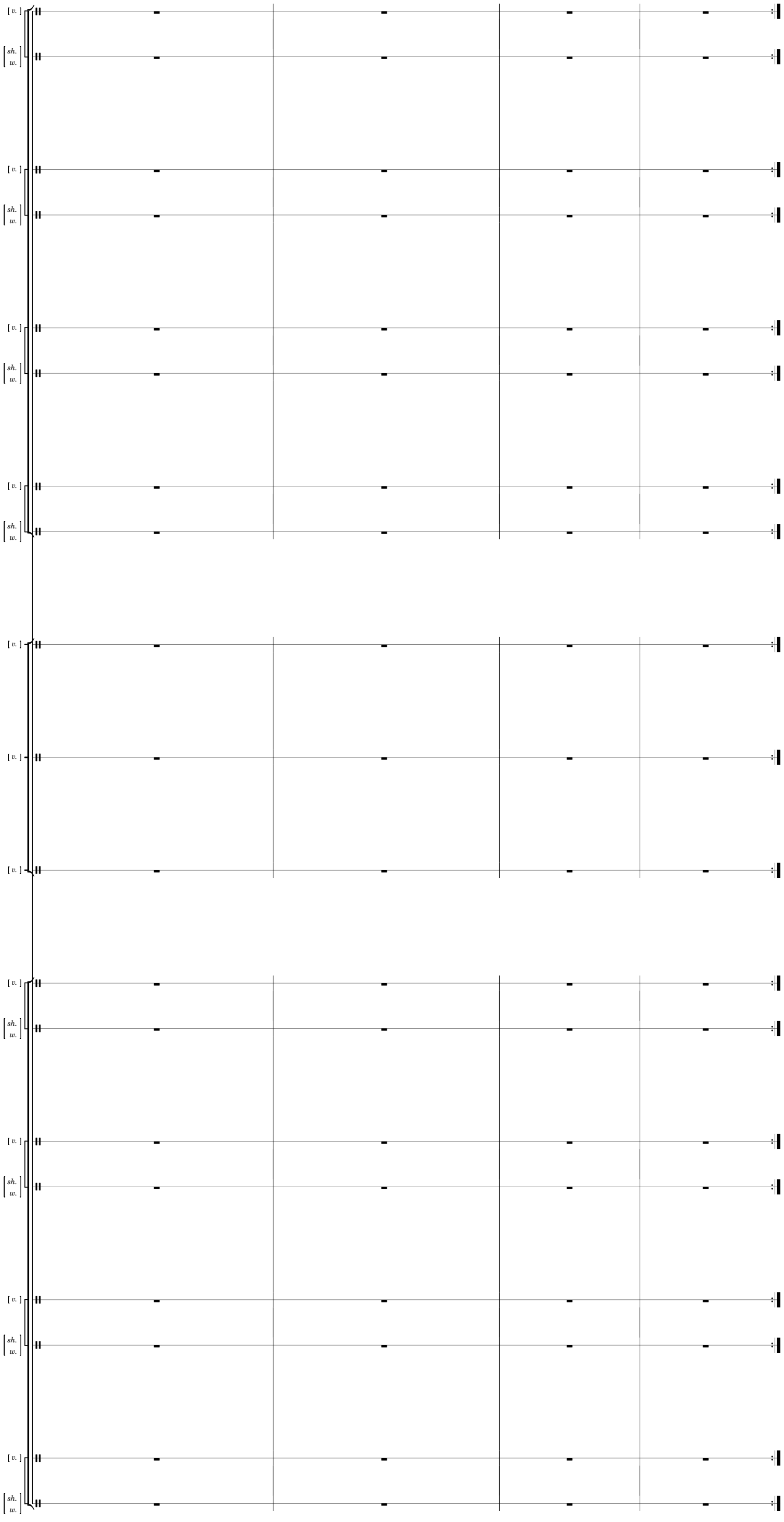

78

♩ = 48

E

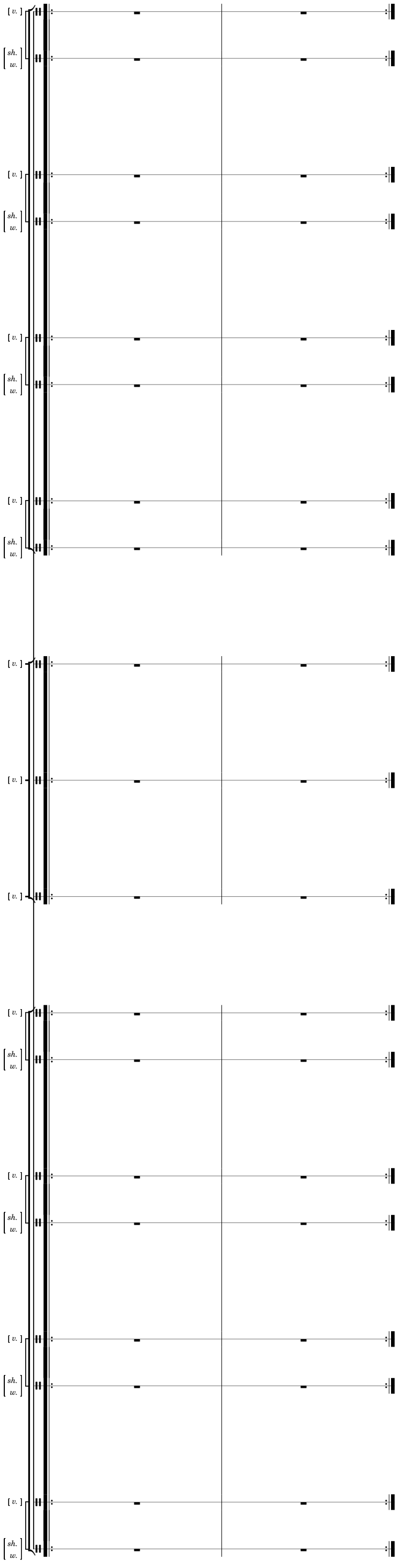

80

♩ = 96

4/4 F

[v.]
[sh.
w.]
[v.]
[sh.
w.]
[v.]
[sh.
w.]
[v.]
[sh.
w.]
[v.]
[v.]
[v.]
[sh.
w.]
[v.]
[sh.
w.]
[v.]
[sh.
w.]
[v.]
[sh.
w.]

83

86

89

85

[v.]
[sh.
w.]
[v.]
[sh.
w.]
[v.]
[sh.
w.]
[v.]
[sh.
w.]
[v.]
[v.]
[v.]
[v.]
[sh.
w.]
[v.]
[sh.
w.]
[v.]
[sh.
w.]
[v.]
[sh.
w.]

93

♩ = 96

3/4 G

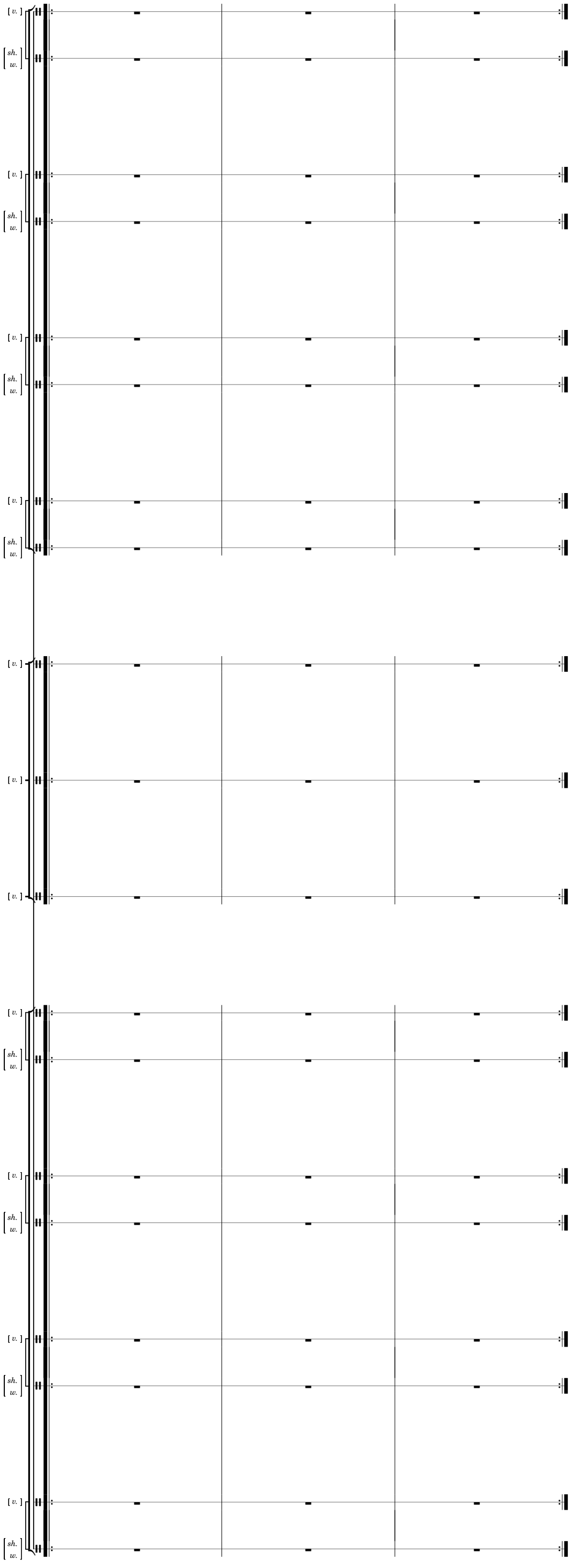

96

♩ = 64

H

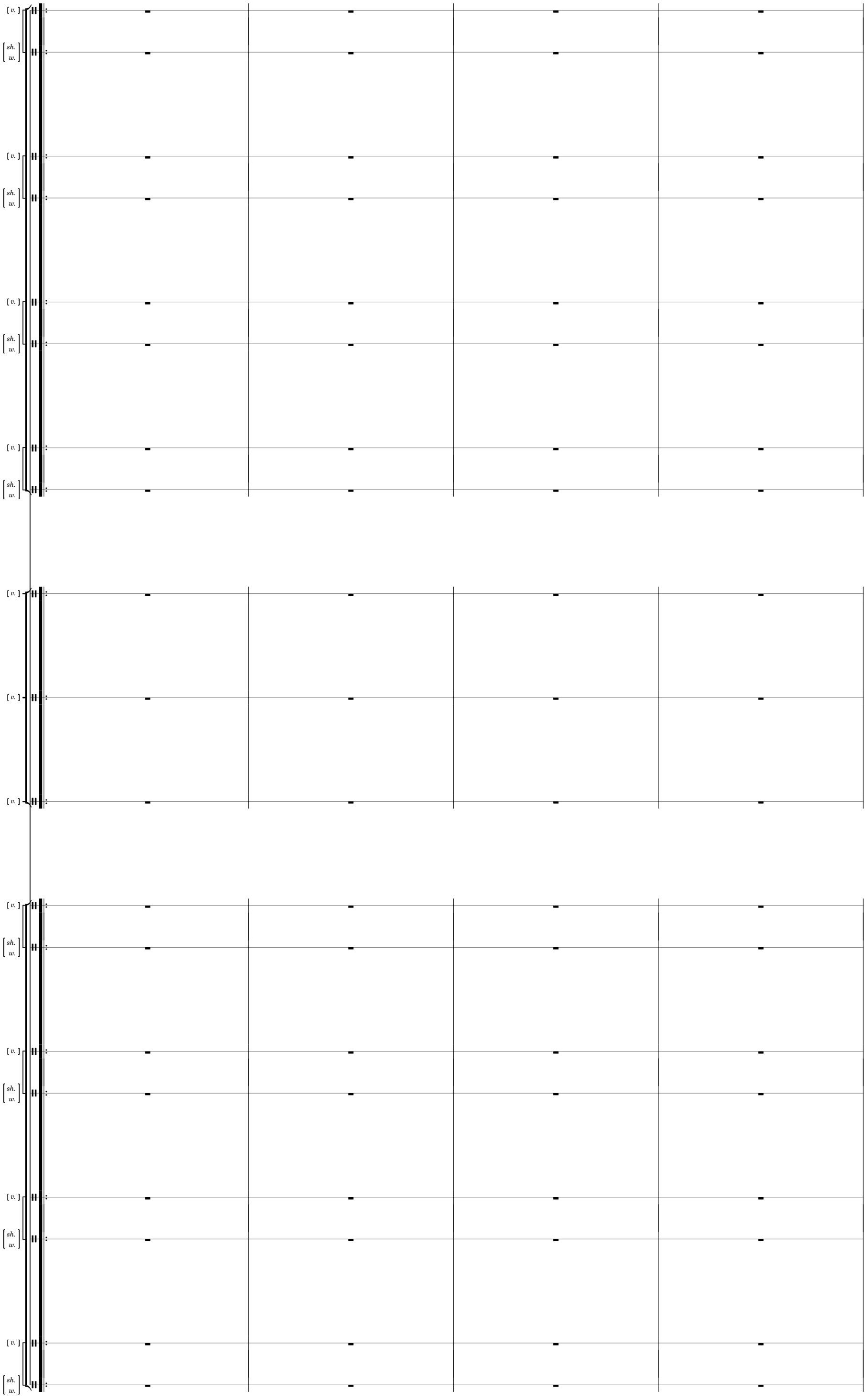

100

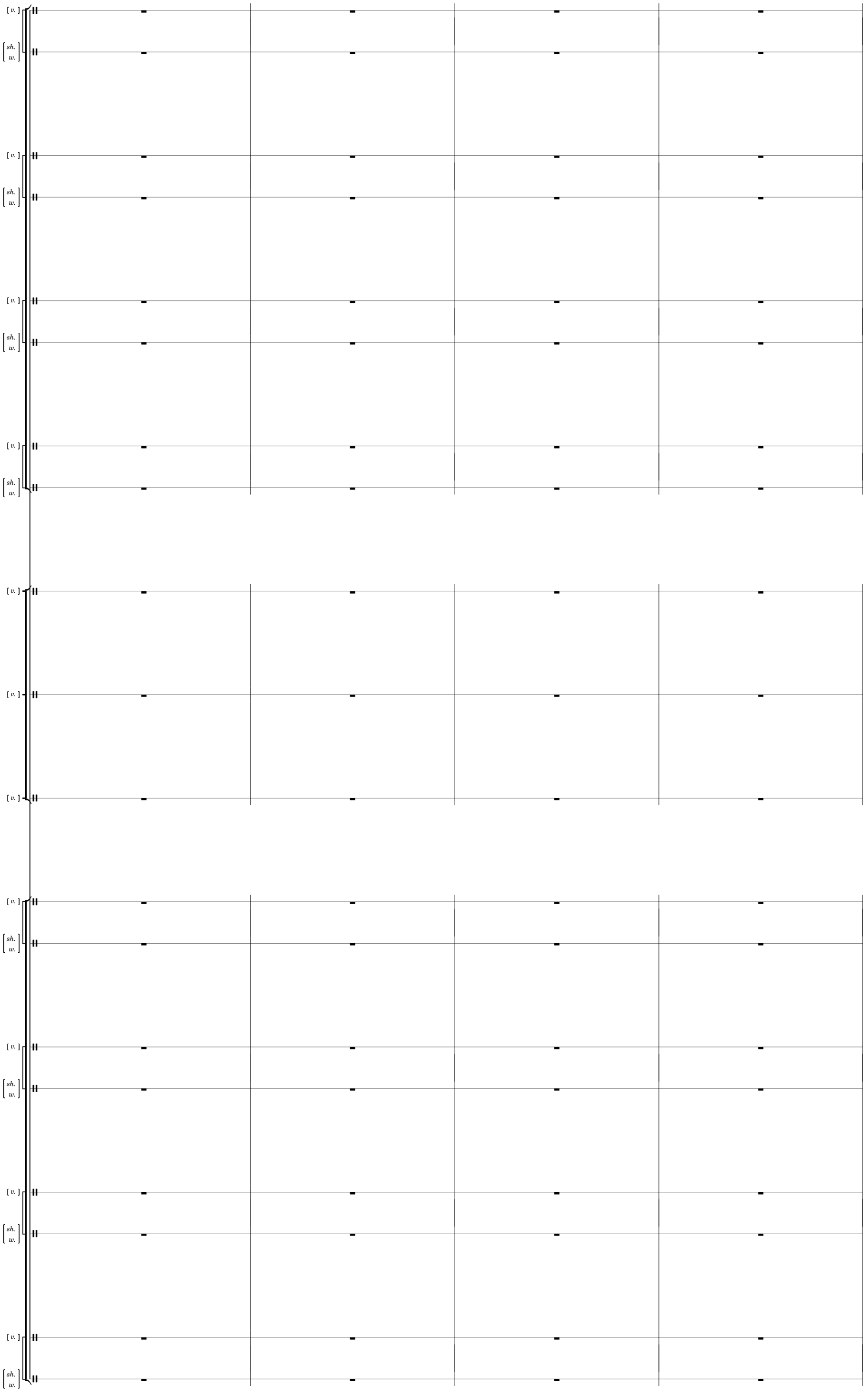

104

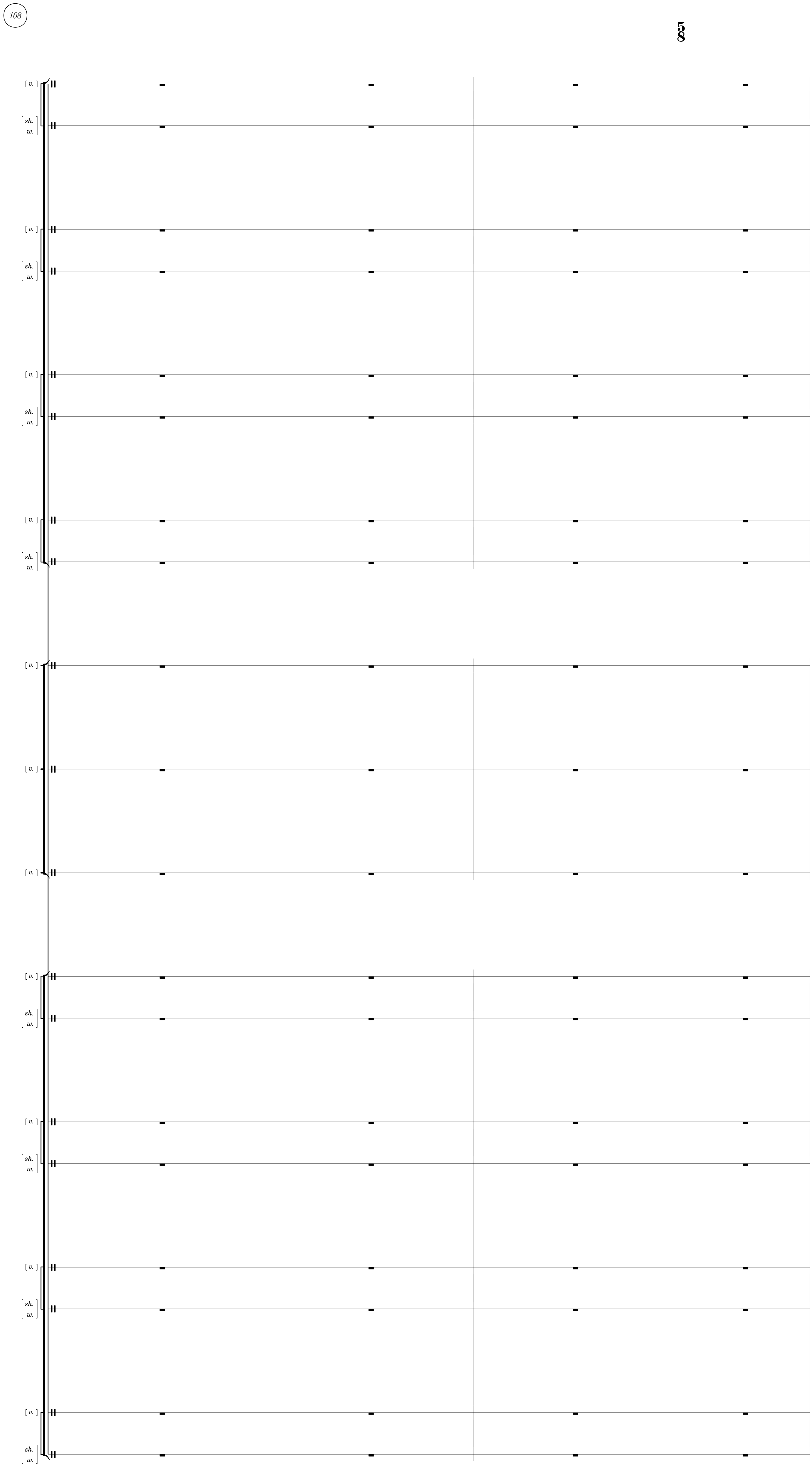
108
5
8
[v.]
sh.
w.
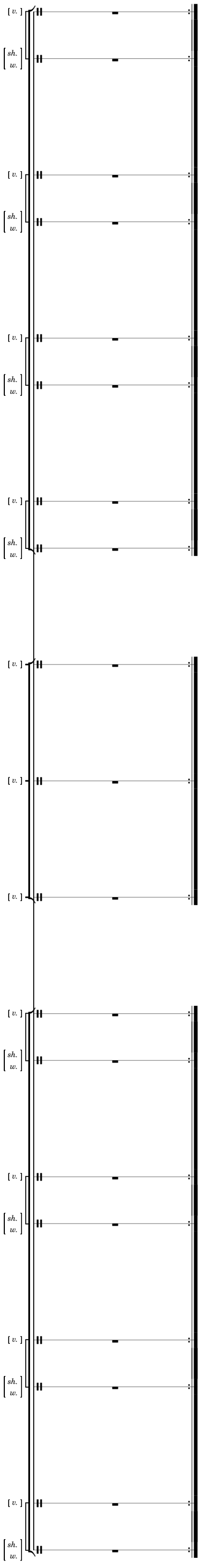
112