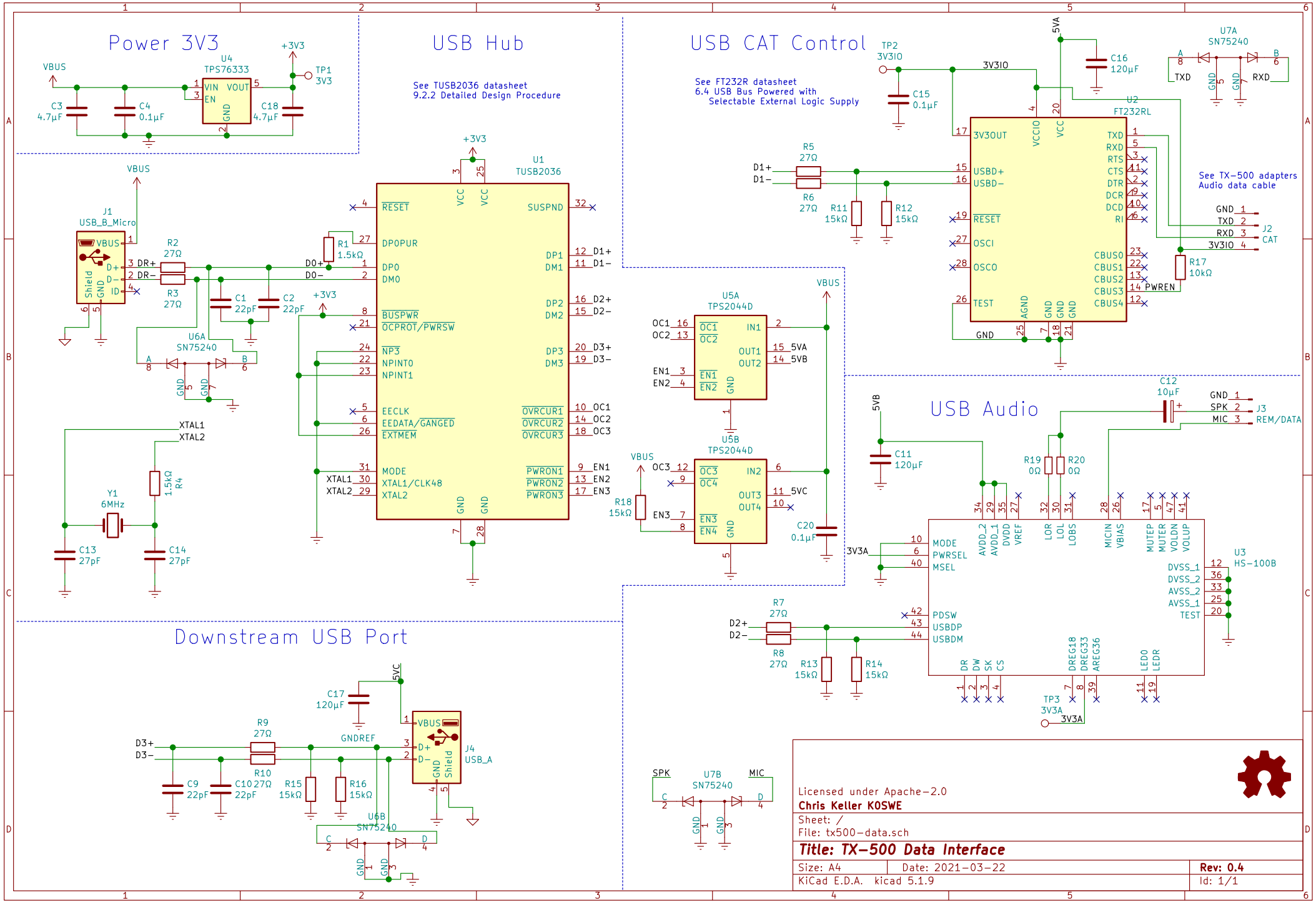
Power 3V3
U4
TPS76333
VIN
VOUT
EN
GND
VBUS
+3V3
TP1
3V3
C3
4.7µF
C4
0.1µF
C18
4.7µF
USB Hub
See TUSB2036 datasheet
9.2.2 Detailed Design Procedure
U1
TUSB2036
RESET
DP0PUR
DP0
DM0
BUSPWR
OCPROT/PWRSW
NP3
NPINT0
NPINT1
EECLK
EEDATA/GANGED
EXTMEM
MODE
XTAL1/CLK48
XTAL2
SUSPND
DP1
DM1
DP2
DM2
DP3
DM3
OVRCUR1
OVRCUR2
OVRCUR3
PWRON1
PWRON2
PWRON3
VCC
GND
J1
USB_B_Micro
Shield
R1
1.5kΩ
R2
27Ω
R3
27Ω
C1
22pF
C2
22pF
U6A
SN75240
XTAL1
XTAL2
Y1
6MHz
R4
1.5kΩ
C13
27pF
C14
27pF
USB CAT Control
See FT232R datasheet
6.4 USB Bus Powered with
Selectable External Logic Supply
TP2
3V3IO
C15
0.1µF
C16
120µF
5VA
U7A
SN75240
TXD
RXD
U2
FT232RL
3V3OUT
USBD+
USBD−
RESET
OSCI
OSCO
TEST
VCCIO
VCC
TXD
RXD
RTS
CTS
DTR
DCR
DCD
RI
CBUS0
CBUS1
CBUS2
CBUS3
CBUS4
PWREN
AGND
GND
R5
27Ω
R6
27Ω
R11
15kΩ
R12
15kΩ
See TX−500 adapters
Audio data cable
J2
CAT
R17
10kΩ
U5A
TPS2044D
U5B
TPS2044D
OC1
OC2
EN1
EN2
IN1
OUT1
OUT2
OC3
OC4
EN3
EN4
IN2
OUT3
OUT4
5VB
5VC
R18
15kΩ
C20
0.1µF
USB Audio
C12
10µF
J3
REM/DATA
SPK
MIC
C11
120µF
R19
0Ω
R20
0Ω
U3
HS−100B
MODE
PWRSEL
MSEL
PDSW
USBDP
USBDM
AVDD_2
AVDD_1
DVDD
VREF
LOR
LOL
LOBS
MICIN
VBIAS
MUTEP
MUTER
VOLDN
VOLUP
DVSS_1
DVSS_2
AVSS_2
AVSS_1
TEST
DR
DW
SK
CS
DREG18
DREG33
AREG36
LEDO
LEDR
3V3A
TP3
R7
27Ω
R8
27Ω
R13
15kΩ
R14
15kΩ
Downstream USB Port
C17
120µF
R9
27Ω
R10
27Ω
GNDREF
J4
USB_A
C9
22pF
C10
22pF
R15
15kΩ
R16
15kΩ
U6B
SN75240
U7B
SN75240
Licensed under Apache−2.0
Chris Keller K0SWE
Sheet: /
File: tx500−data.sch
Title: TX−500 Data Interface
Size: A4
Date: 2021−03−22
Rev: 0.4
KiCad E.D.A. kicad 5.1.9
Id: 1/1