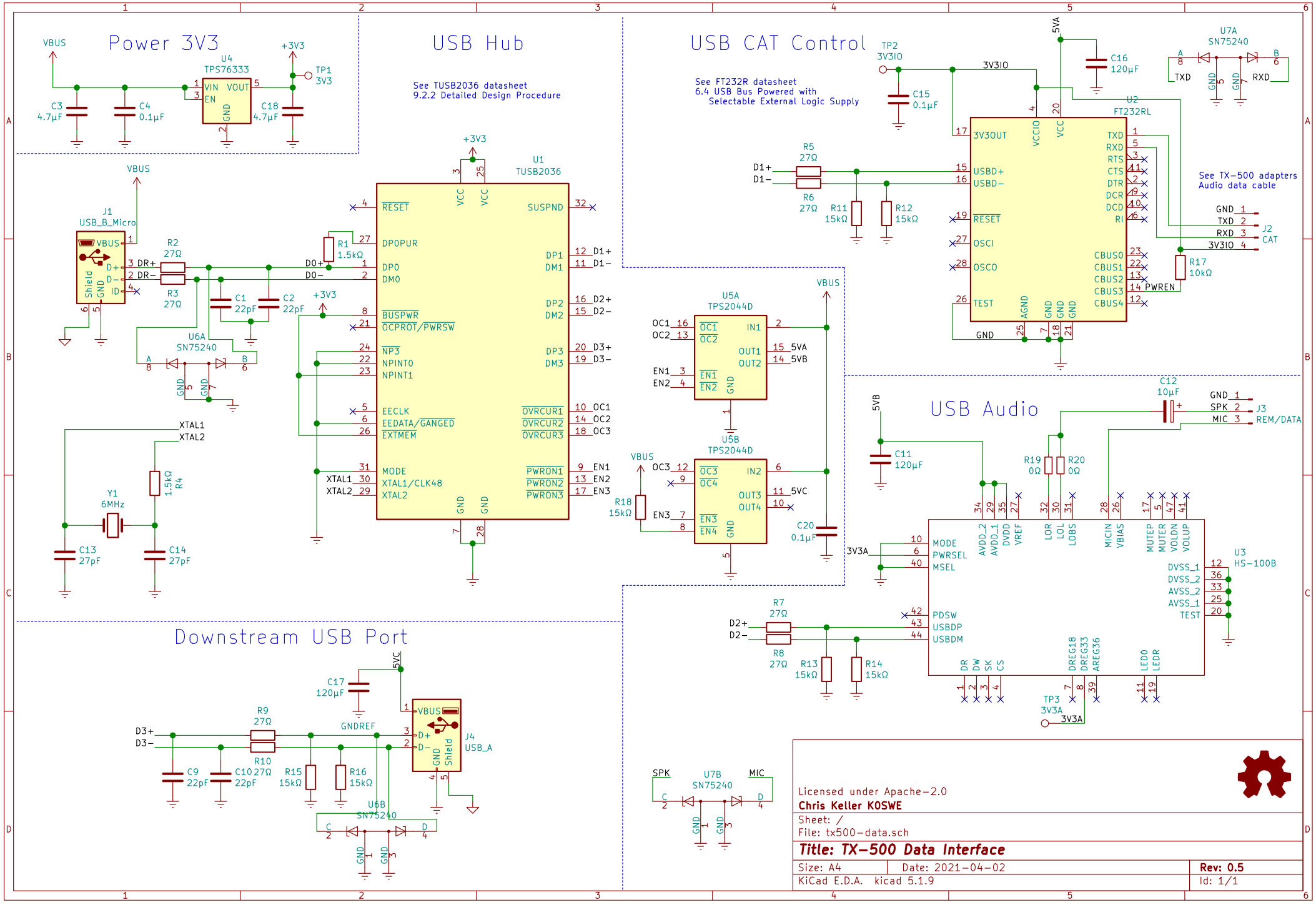
Power 3V3
USB Hub
See TUSB2036 datasheet
9.2.2 Detailed Design Procedure
USB CAT Control
See FT232R datasheet
6.4 USB Bus Powered with
Selectable External Logic Supply
See TX-500 adapters
Audio data cable
USB Audio
Downstream USB Port
U4
TPS76333
U1
TUSB2036
U2
FT232RL
U3
HS-100B
U5A
TPS2044D
U5B
TPS2044D
U6A
SN75240
U6B
SN75240
U7A
SN75240
U7B
SN75240
J1
USB_B_Micro
J4
USB_A
J2
CAT
J3
REM/DATA
Y1
6MHz
Licensed under Apache-2.0
Chris Keller K0SWE
Sheet: /
File: tx500-data.sch
Title: TX-500 Data Interface
Size: A4
Date: 2021-04-02
Rev: 0.5
KiCad E.D.A. kicad 5.1.9
Id: 1/1