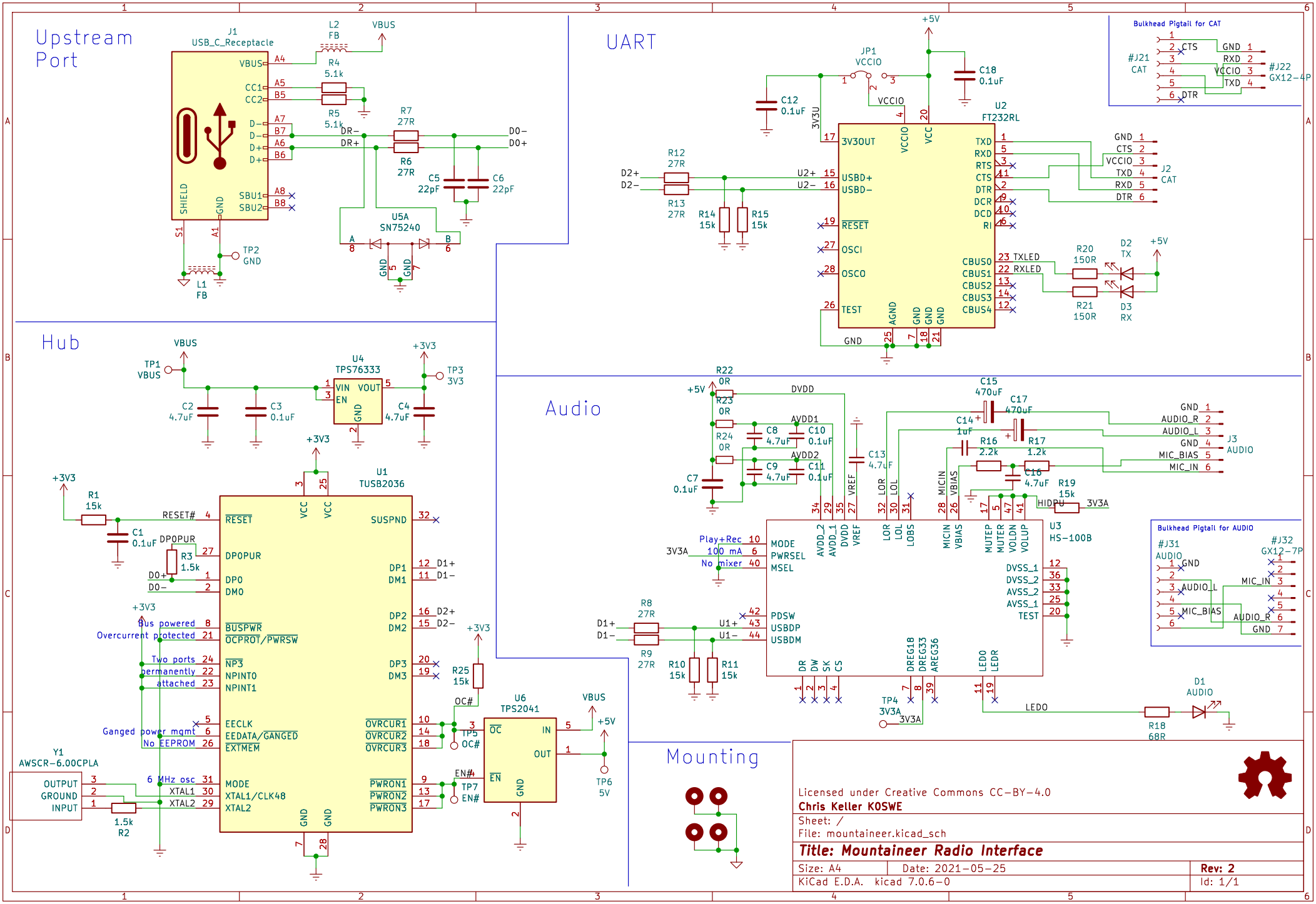
Upstream Port
J1
USB_C_Receptacle
VBUS
CC1
CC2
D−
D+
SHIELD
GND
SBU1
SBU2
L2
FB
R4
5.1k
R5
5.1k
R7
27R
R6
27R
C5
22pF
C6
22pF
U5A
SN75240
TP2
GND
L1
FB
UART
JP1
VCCIO
C12
0.1uF
C18
0.1uF
U2
FT232RL
3V3OUT
USBD+
USBD−
RESET
OSCI
OSCO
TEST
TXD
RXD
RTS
CTS
DTR
DCR
DCD
RI
CBUS0
CBUS1
CBUS2
CBUS3
CBUS4
AGND
R12
27R
R13
27R
R14
15k
R15
15k
R20
150R
R21
150R
D2
TX
D3
RX
J2
CAT
Bulkhead Pigtail for CAT
#J21
CAT
#J22
GX12−4P
Hub
TP1
VBUS
U4
TPS76333
VIN
VOUT
EN
C2
4.7uF
C3
0.1uF
C4
4.7uF
TP3
3V3
U1
TUSB2036
RESET#
R1
15k
C1
0.1uF
DPOPUR
R3
1.5k
DPO
DMO
BUSPWR
OCPROT/PWRSW
NP3
NPINTO
NPINT1
EECLK
EEDATA/GANGED
EXTMEM
MODE
XTAL1/CLK48
XTAL2
SUSPND
DP1
DM1
DP2
DM2
DP3
DM3
OVRCUR1
OVRCUR2
OVRCUR3
PWRON1
PWRON2
PWRON3
Bus powered
Overcurrent protected
Two ports
permanently
attached
Ganged power mgmt
No EEPROM
6 MHz osc
Y1
AWSCR−6.00CPLA
OUTPUT
GROUND
INPUT
1.5k
R2
R25
15k
OC#
TP5
OC#
EN#
TP7
EN#
U6
TPS2041
OC
IN
OUT
EN
GND
TP6
5V
Audio
R22
0R
R23
0R
R24
0R
C7
0.1uF
C8
4.7uF
C10
0.1uF
C9
4.7uF
C11
0.1uF
C13
4.7uF
C15
470uF
C17
470uF
C14
1uF
R16
2.2k
R17
1.2k
C16
4.7uF
R19
15k
HIDPU
3V3A
U3
HS−100B
MODE
PWRSEL
MSEL
PDSW
USBDP
USBDM
Play+Rec
100 mA
No mixer
AVDD_2
AVDD_1
DVDD
VREF
LOR
LOL
LOBS
MICIN
VBIAS
MUTEP
MUTER
VOLDN
VOLUP
DVSS_1
DVSS_2
AVSS_2
AVSS_1
TEST
DR
DW
SK
CS
DREG18
DREG33
AREG36
LEDO
LEDR
R8
27R
R9
27R
R10
15k
R11
15k
TP4
3V3A
D1
AUDIO
R18
68R
J3
AUDIO
Bulkhead Pigtail for AUDIO
#J31
AUDIO
#J32
GX12−7P
Mounting
Licensed under Creative Commons CC−BY−4.0
Chris Keller K0SWE
Sheet: /
File: mountaineer.kicad_sch
Title: Mountaineer Radio Interface
Size: A4
Date: 2021−05−25
Rev: 2
KiCad E.D.A. kicad 7.0.6−0
Id: 1/1