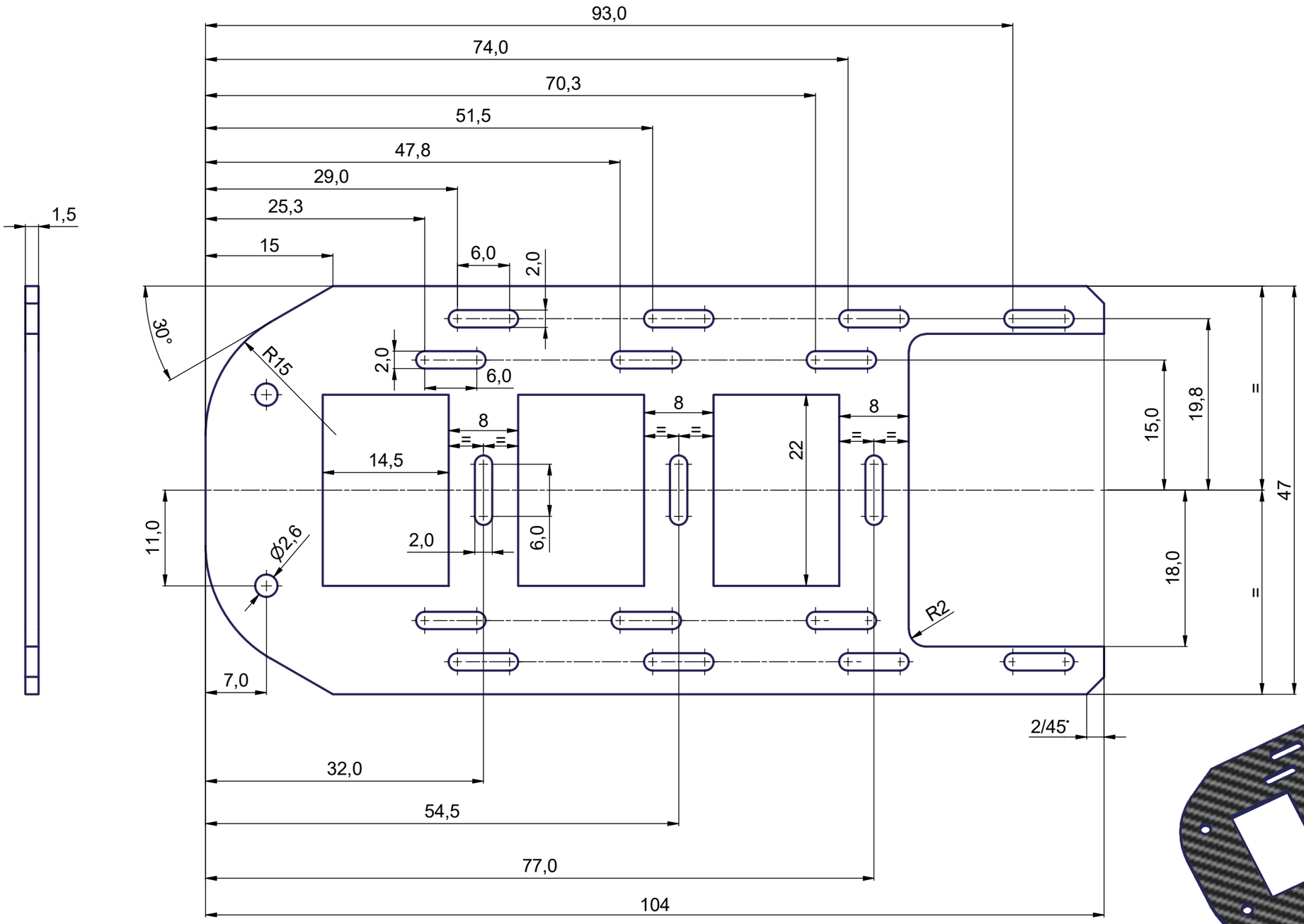

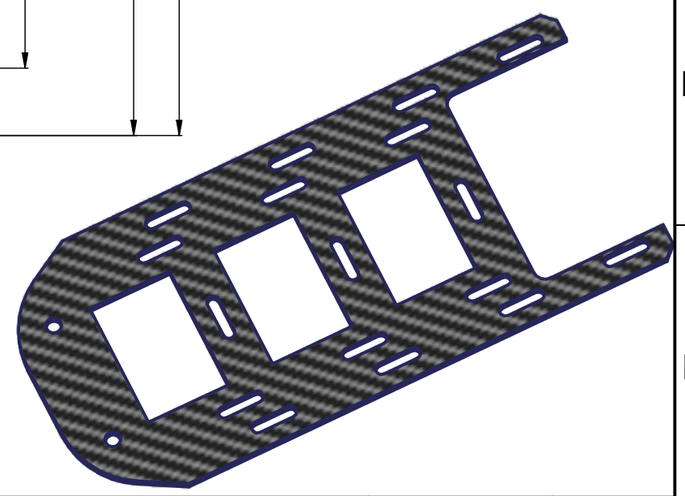

Item: 03	Qty.: 2	Title: Bocni nosac		Dimension: 1,5x47x104	Material: CFRP
	Date	Name	Signature	Project: SpECulARiA	Drawing Nr.: LR 120 03 / Revision: 0
Designed by	12.7.2019.	S. Flegarić			
Checked by		M. Orsag			
Approved by		M. Orsag			Connection: LR 120 00

The University of Zagreb
Faculty of Electrical Engineering and Computing
LARICS

LARICS
is the owner or the licensee of all intellectual property rights for this document

Toleranace of free mesure
Linear mesure..... x -----± 0,5 mm
x,x-----± 0,1 mm
x,xx---± 0,01 mm
Angular mesure..... x-----± 1°
x,x---± 0,1°
Outside edge..... 0,5/45°
Inside edge radius..... 0,5mm

Scale: 2:1
Format: A3
[mm]
List: 1 /1