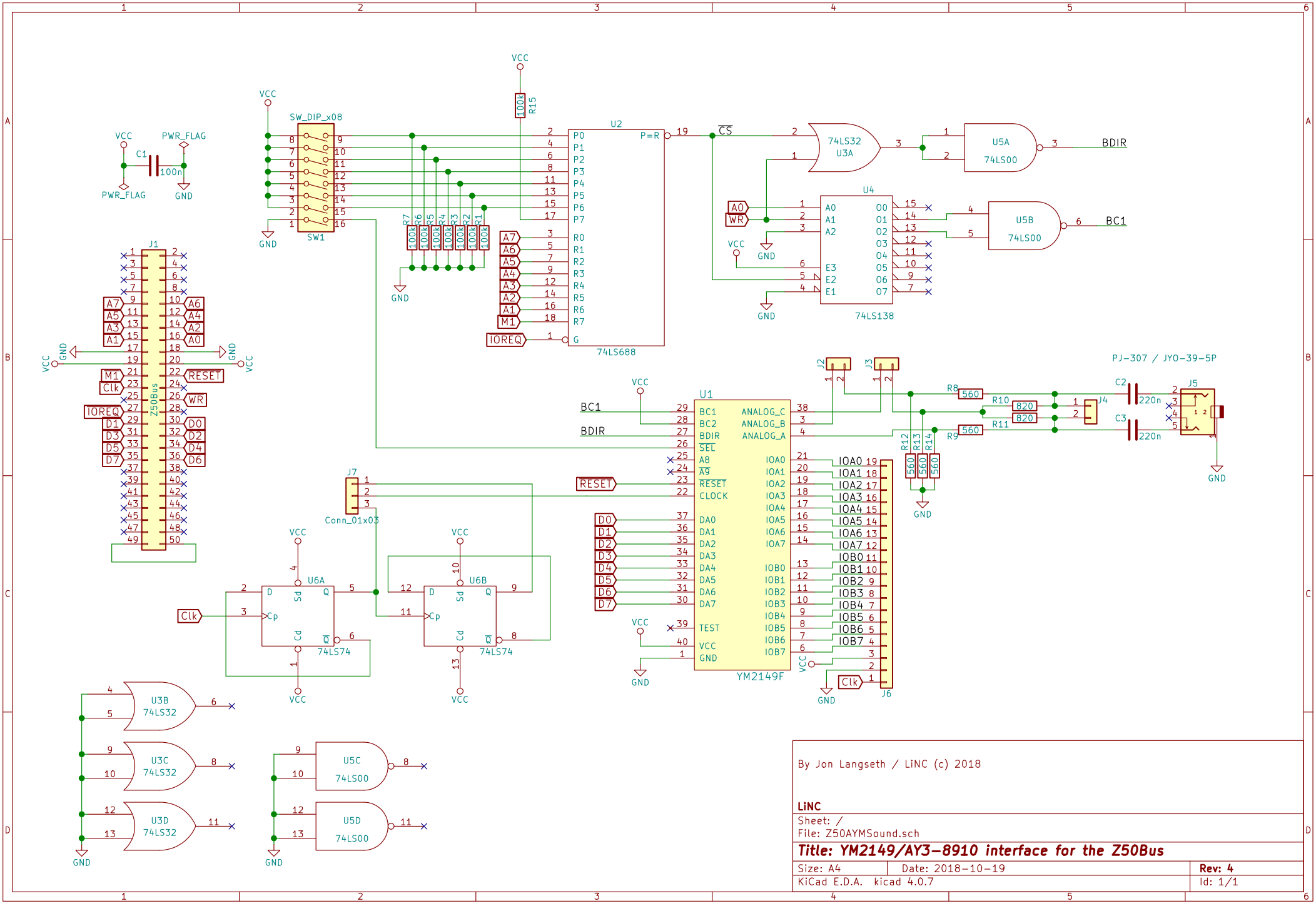
SW_DIP_x08
SW1
U2
74LS688
U4
74LS138
U5A
74LS00
U5B
74LS00
U5C
74LS00
U5D
74LS00
U3A
74LS32
U3B
74LS32
U3C
74LS32
U3D
74LS32
U6A
U6B
74LS74
U1
YM2149F
J1
Z50Bus
J2
J3
J4
J5
J6
J7
Conn_01x03
PJ-307 / JYO-39-5P
C1
100n
C2
220n
C3
220n
R15
100k
R7
R6
R5
R4
R3
R2
R1
R8
R9
R10
R11
R12
R13
R14
560
820
VCC
GND
PWR_FLAG
BDIR
BC1
RESET
Clk
IOREQ
WR
A0
A1
A2
A3
A4
A5
A6
A7
M1
D0
D1
D2
D3
D4
D5
D6
D7
CS
P=R
BC1
BDIR
SEL
A8
A9
RESET
CLOCK
TEST
VCC
GND
ANALOG_C
ANALOG_B
ANALOG_A
IOA0
IOA1
IOA2
IOA3
IOA4
IOA5
IOA6
IOA7
IOB0
IOB1
IOB2
IOB3
IOB4
IOB5
IOB6
IOB7
By Jon Langseth / LiNC (c) 2018
LiNC
Sheet: /
File: Z50AYMSound.sch
Title: YM2149/AY3-8910 interface for the Z50Bus
Size: A4
Date: 2018-10-19
Rev: 4
KiCad E.D.A. kicad 4.0.7
Id: 1/1