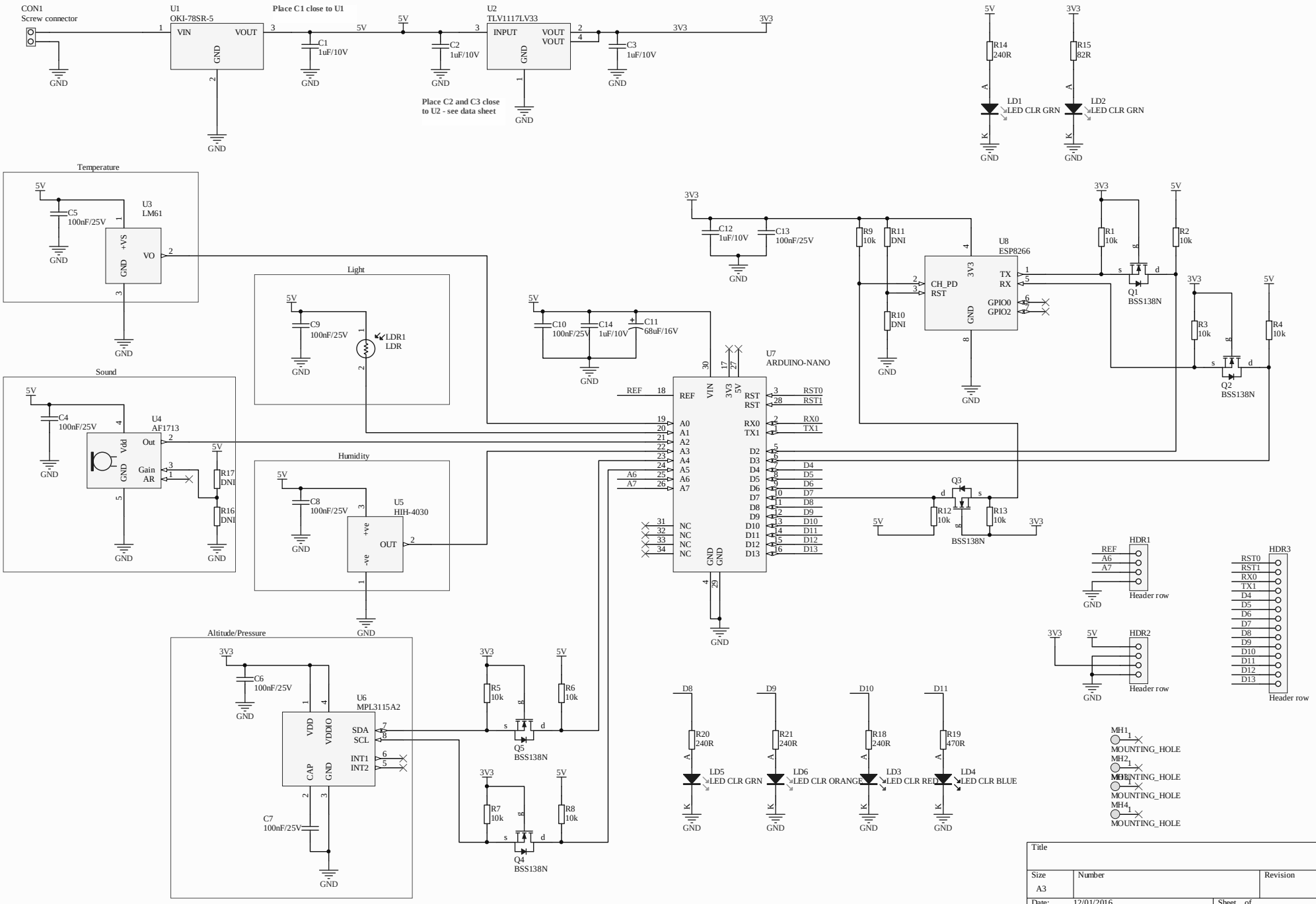

Title		
Size A3	Number	Revision
Date: 12/01/2016		Sheet of
File: C:\documents\..\Sheet1.SchDoc		Drawn By: