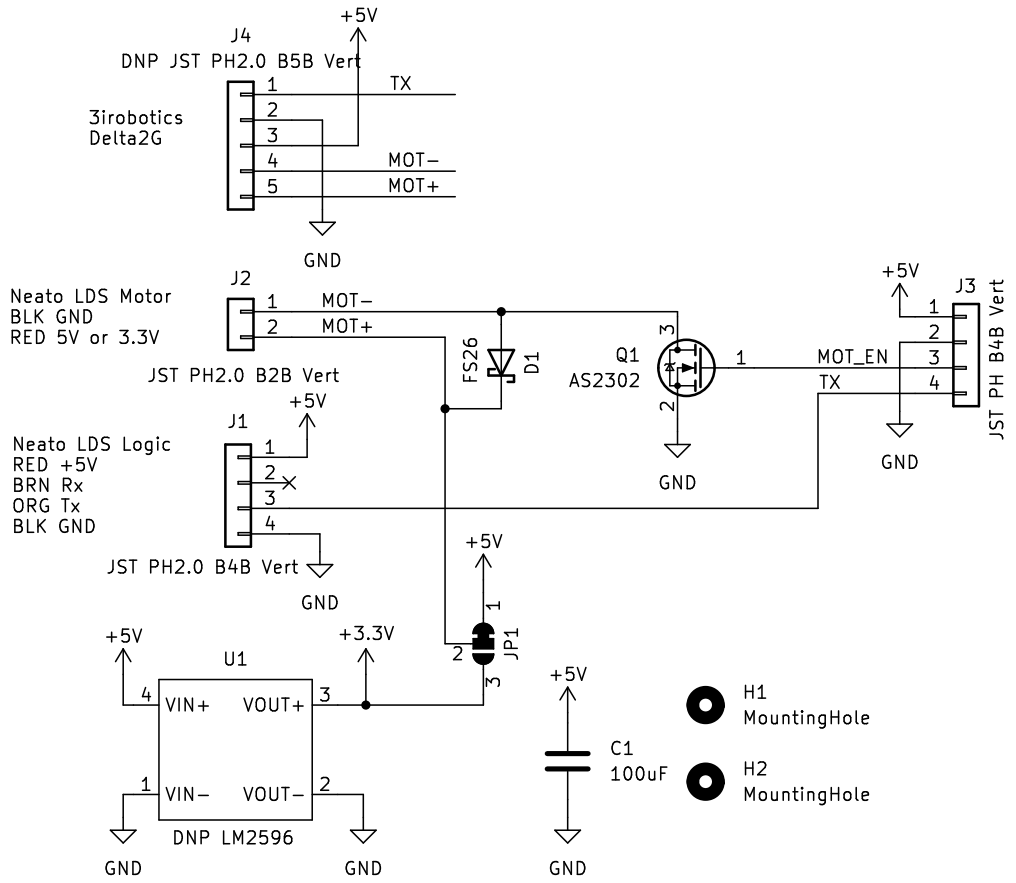

makerspet.com

Sheet: /

File: Neato_adapter.kicad_sch

Title: Neato XV11/Delta−2G LDS adapter

Size: A5	Date: 2024−01−31	**Rev: 0.3.0**
KiCad E.D.A. kicad 7.0.9		Id: 1/1