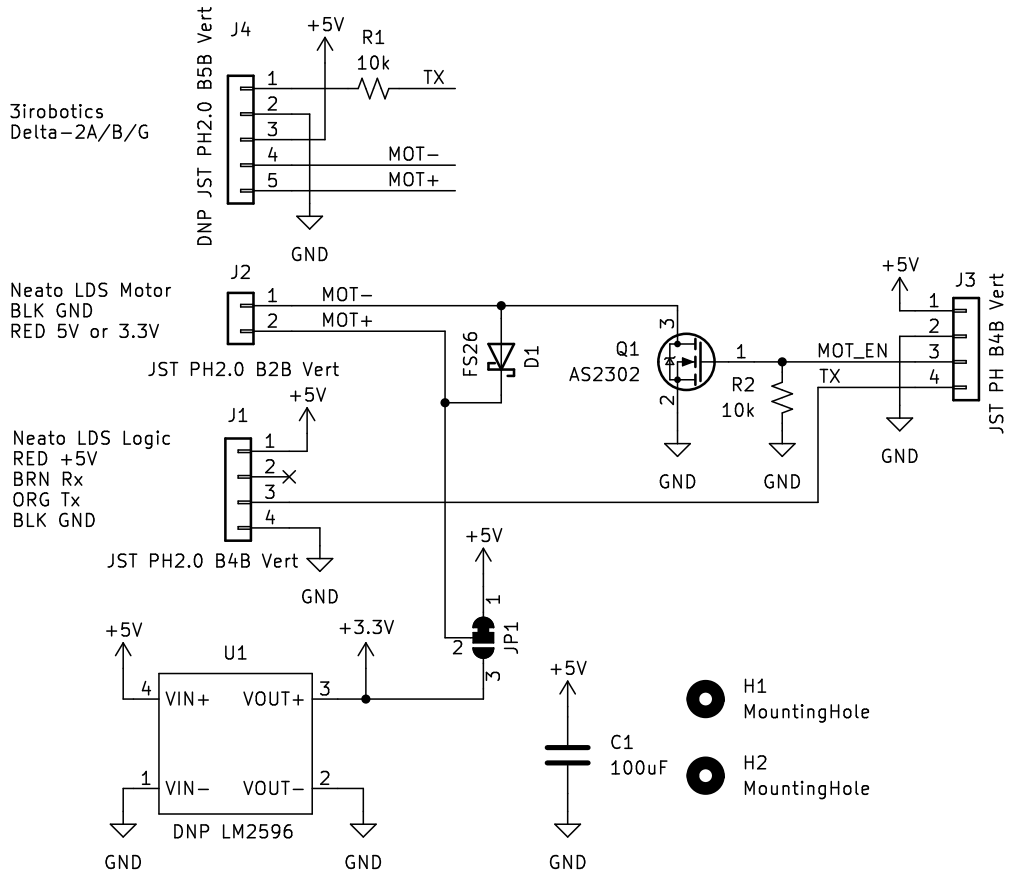

makerspet.com

Sheet: /

File: neato_delta_adapter.kicad_sch

Title: Neato XV11/Delta-2G LDS adapter

Size: A5	Date: 2024-03-08	**Rev: 0.3.1**
KiCad E.D.A. kicad 7.0.9		Id: 1/1