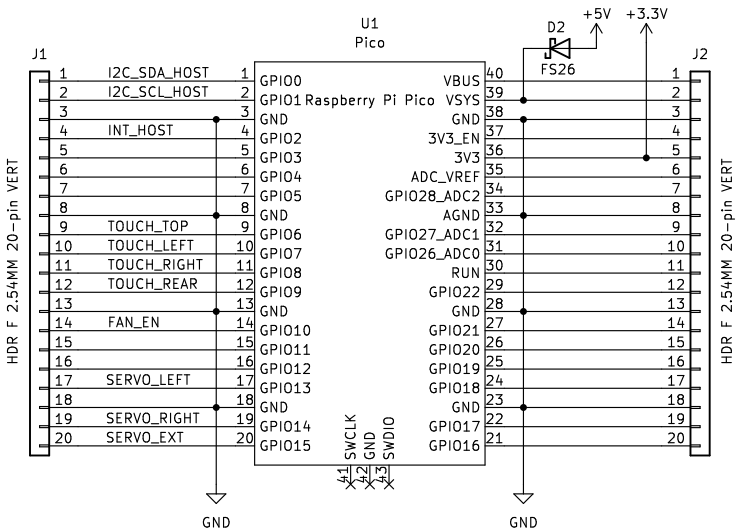

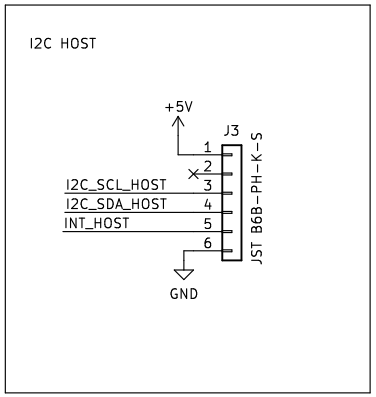

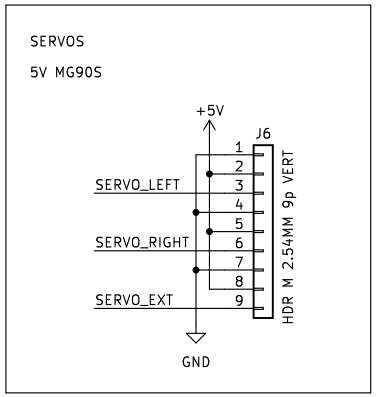

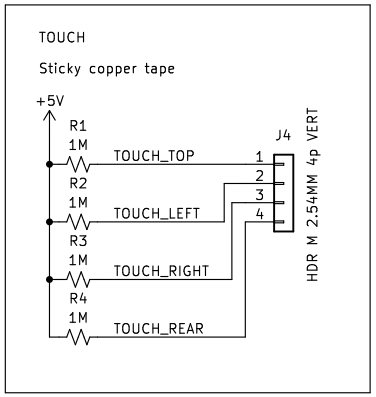

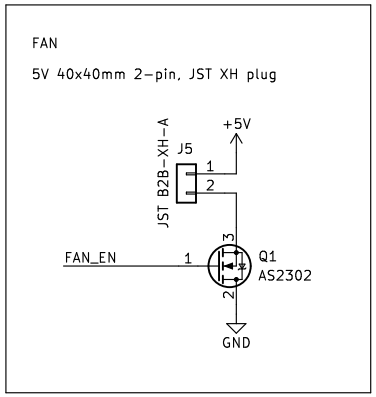

H2 MountingHole

H3 MountingHole

H1 MountingHole

H4 MountingHole

makerspet.com

Maker's Pet

Sheet: /

File: pico_breakout_head.kicad_sch

Title: Raspberry Pi Pico Breakout – Head

Size: USLetter	Date: 2023-12-26	**Rev: 0.2.0**
KiCad E.D.A. kicad 7.0.9		Id: 1/1