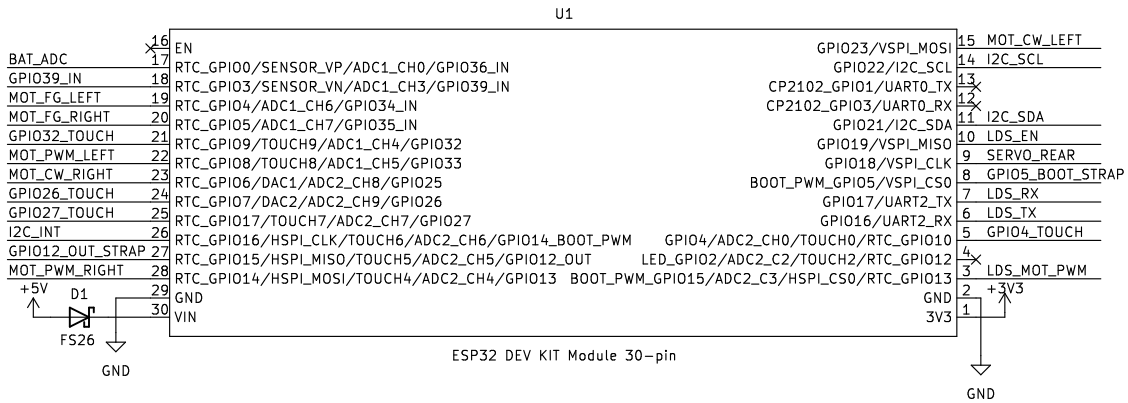

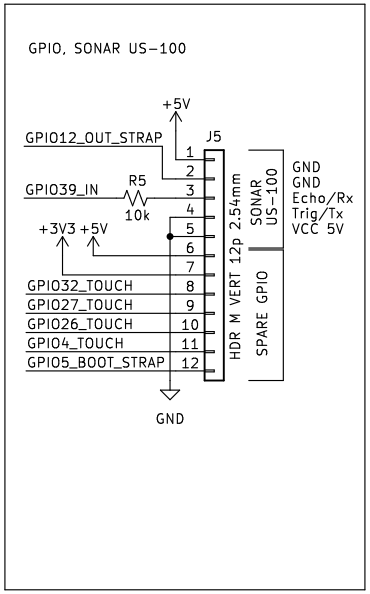

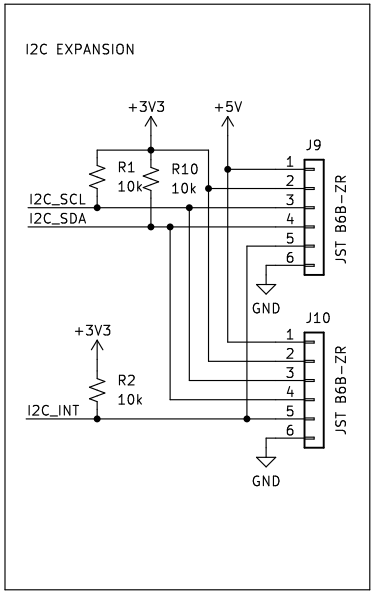

MOTORS

Option 1: CHR-GM25-BLDC2418 i45
Type BLDC
Voltage 24V, I/O 5V
Diameter 25mm, weight 69g
Max RPM 200, rated RPM 145
Rated torque 1.5Kg*cm, stall torque 5Kg*cm
Max power 2.5W, stall current 0.65A
https://www.aliexpress.us/item/2251832633601682.html

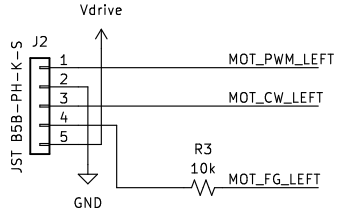

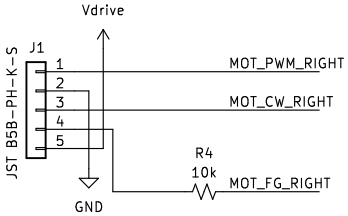

LASER DISTANCE SENSOR

YDLidar X4, https://www.ydlidar.com/
YDLidar X4 connector pinout:
VCC 5V
TX all I/O 3.3V
RX
GND
M_SCTR speed
DEV_EN N/C
M_EN
N/C

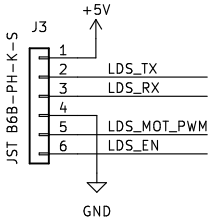

Input battery voltage:
- 12V when using 12V motors
- 24V when using 24V motors

Max input current approx. 2.2A with both motors stalled

Safety
- motor power overcurrent protection using a fuse
  Use a slow-blow fuse to prevent inrush current tripping the fuse
- battery input reverse polarity protection using a Schottki diode
- input overvoltage LM2596 40V max; motors not protected
- 5V output LM2596 provides current limit, short, thermal protection

WARNING: do NOT short 24V/12V with any 5V or 3.3V signals

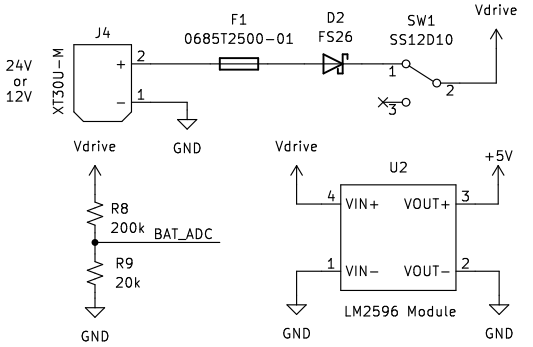

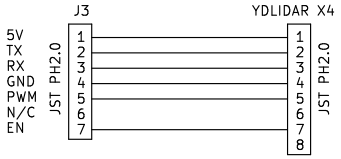

H1 MountingHole
H2 MountingHole
H3 MountingHole
H4 MountingHole

makerspet.com

Sheet: /
File: esp32_breakout.kicad_sch

Title: ESP32 Breakout

Size: USLetter	Date: 2024-03-11	**Rev: 1.2.1**
KiCad E.D.A. kicad 7.0.9		Id: 1/1