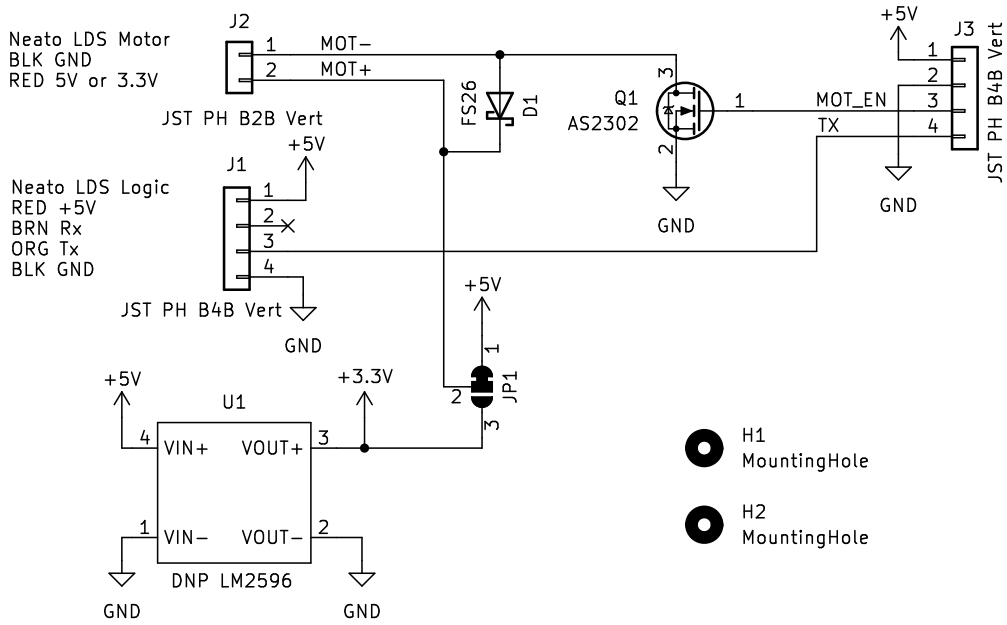

makerspet.com

Sheet: /

File: Neato_adapter.kicad_sch

Title: Neato XV/Botvac LDS adapter

Size: A5	Date: 2024−01−16	**Rev: 0.1.0**
KiCad E.D.A. kicad 7.0.9		Id: 1/1