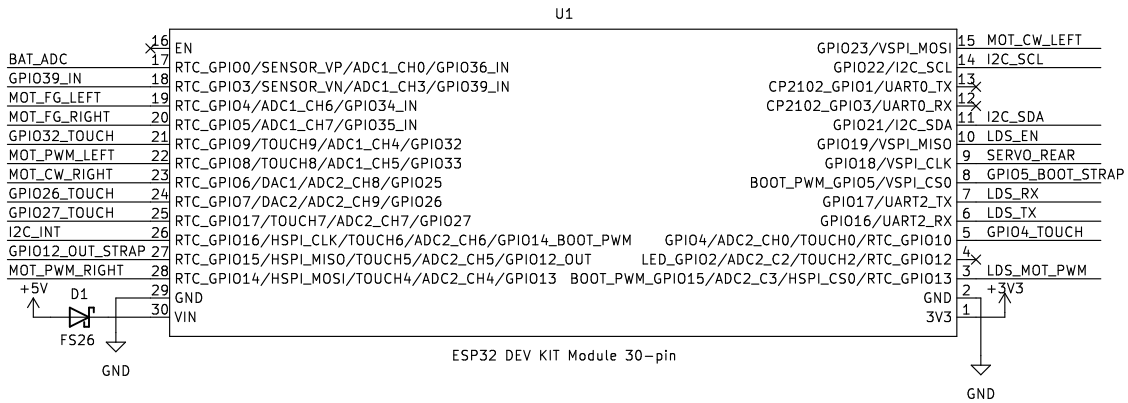

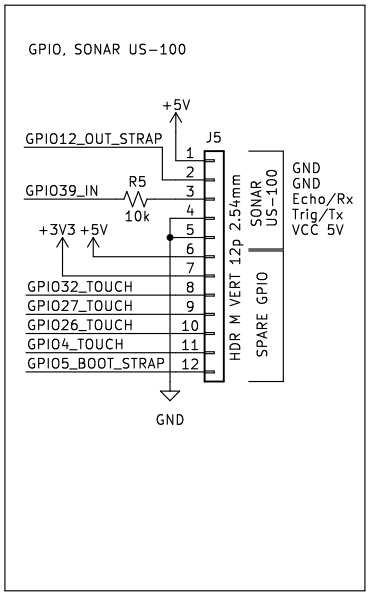

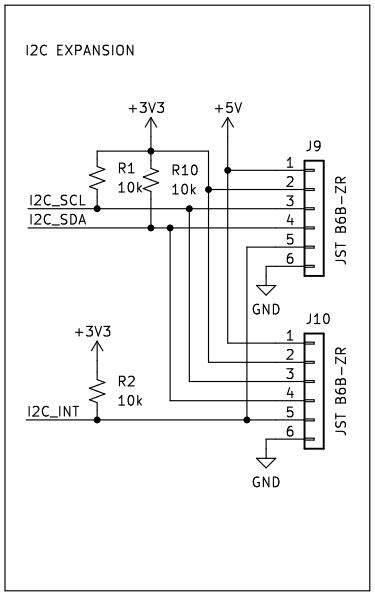

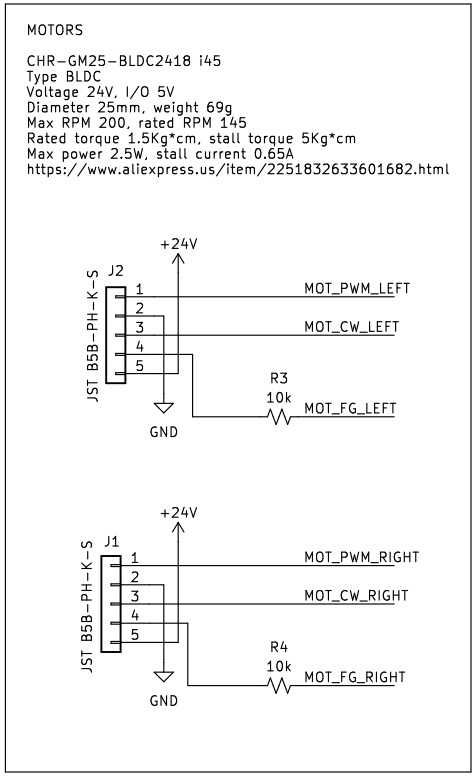

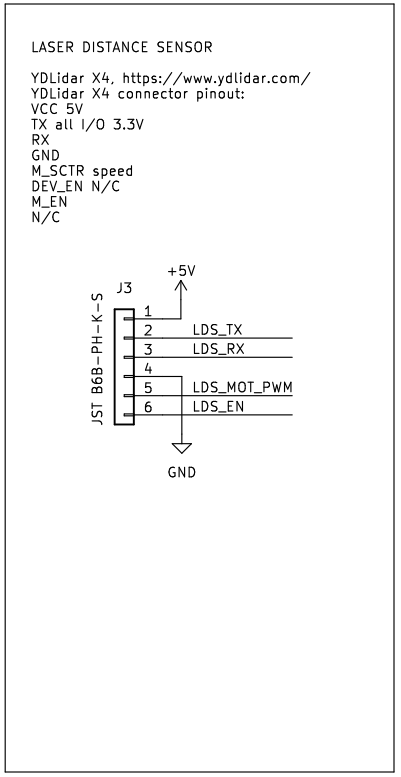

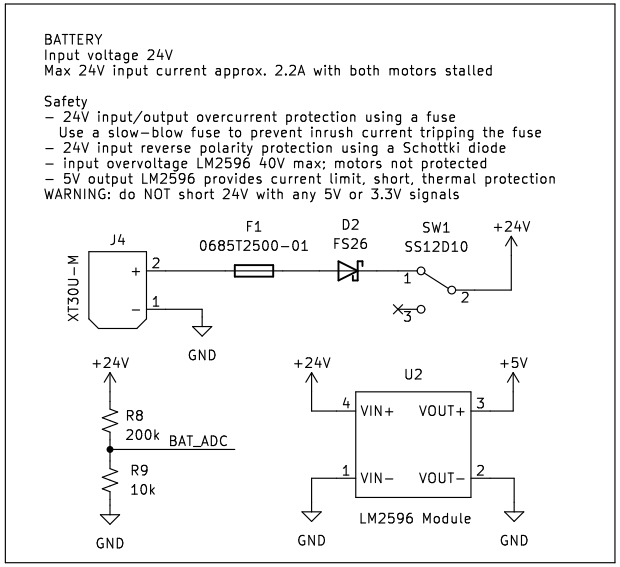

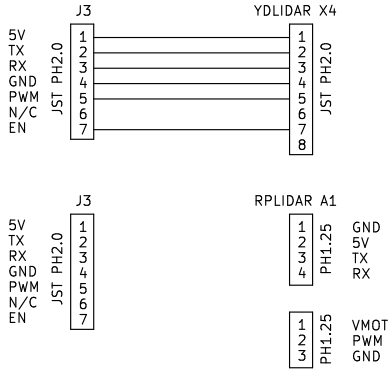

H1 MountingHole
H2 MountingHole
H3 MountingHole
H4 MountingHole

makerspet.com
Maker's Pet
Sheet: /
File: esp32_breakout.kicad_sch

Title: Maker's Pet ESP32 Breakout

Size: USLetter	Date: 2024-03-06	**Rev: 1.2.0**
KiCad E.D.A. kicad 7.0.9		Id: 1/1