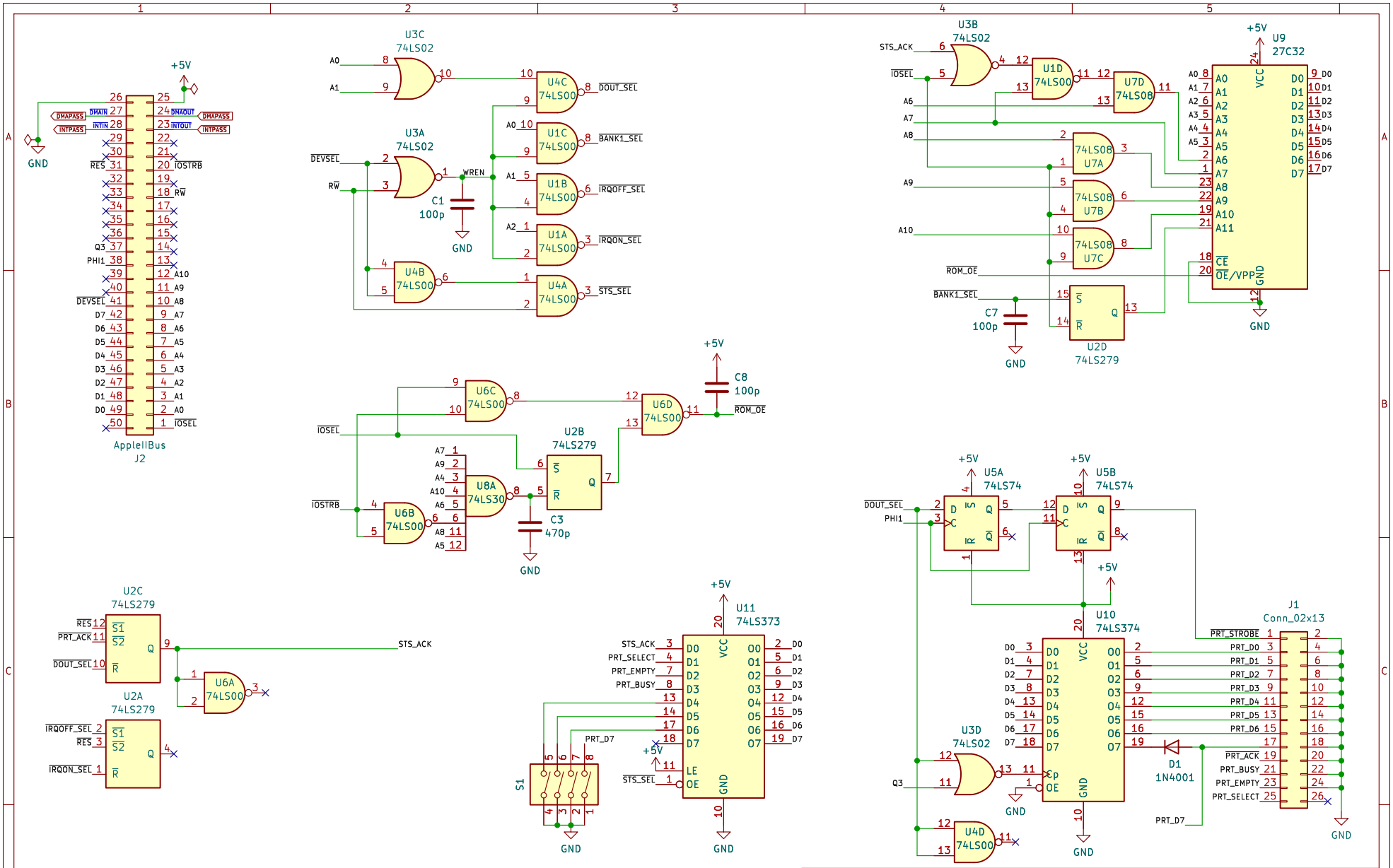

Apple II printer card
by Orange Micro
captured by Mark Aikens

Sheet: /
File: Orange-Micro-Grappler+-Rev-C.kicad_sch

Title: Orange Micro Grappler+ Printer Card

Size: USLetter	Date: 2023-11-06	Rev: C
KiCad E.D.A. kicad 7.0.6		Id: 1/1