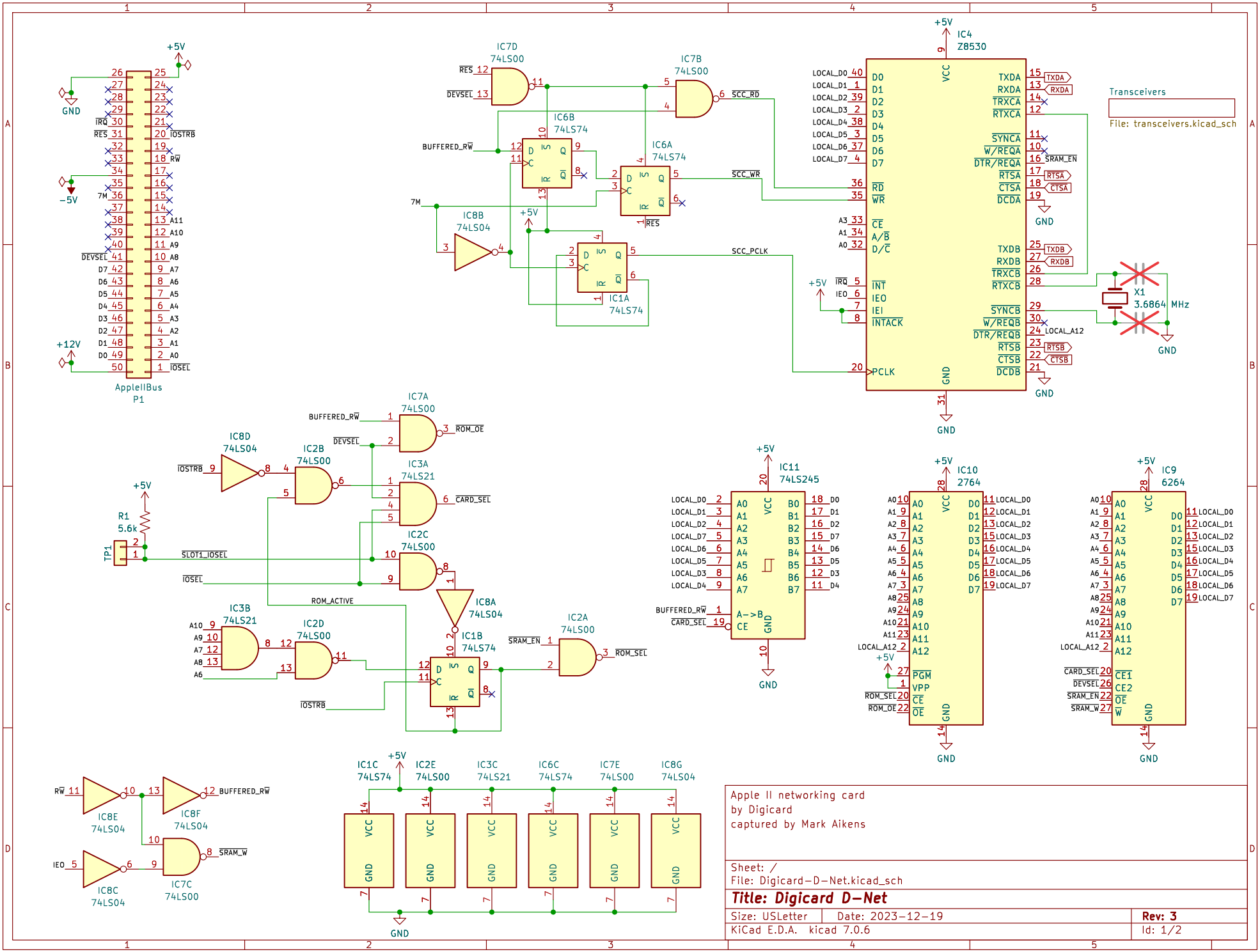
AppleIIBus
P1
IC4
Z8530
Transceivers
File: transceivers.kicad_sch
IC7D
74LS00
IC7B
74LS00
IC6B
74LS74
IC6A
74LS74
IC8B
74LS04
IC1A
74LS74
IC7A
74LS00
IC8D
74LS04
IC2B
74LS00
IC3A
74LS21
IC2C
74LS00
IC8A
74LS04
IC3B
74LS21
IC2D
74LS00
IC1B
74LS74
IC2A
74LS00
IC11
74LS245
IC10
2764
IC9
6264
R1
5.6k
TP1
X1
3.6864 MHz
IC8E
74LS04
IC8F
74LS04
IC8C
74LS04
IC7C
74LS00
IC1C
74LS74
IC2E
74LS00
IC3C
74LS21
IC6C
74LS74
IC7E
74LS00
IC8G
74LS04
Apple II networking card
by Digicard
captured by Mark Aikens
Sheet: /
File: Digicard-D-Net.kicad_sch
Title: Digicard D-Net
Size: USLetter
Date: 2023-12-19
Rev: 3
KiCad E.D.A. kicad 7.0.6
Id: 1/2

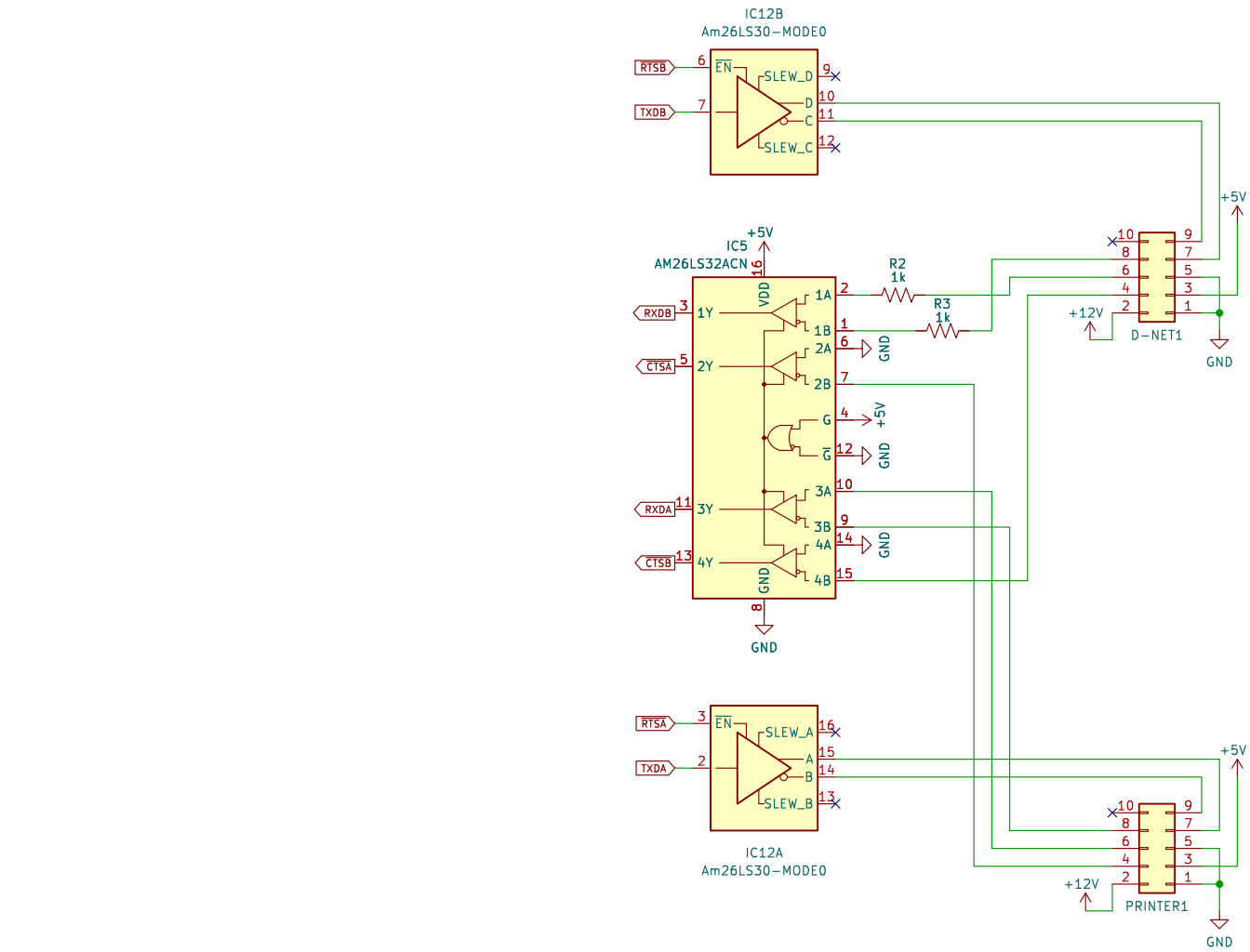

IDC-10 to DB-9 (female) ribbon cable

Pin	DB-9 (F) pin	signal
1	1	GND
2	6	+12V
3	2	+5V
4	7	CTS
5	3	GND
6	8	RX+
7	4	TX+
8	9	RX-
9	5	TX-
10	NC	

(matches a Macintosh DB-9 serial port pinout)

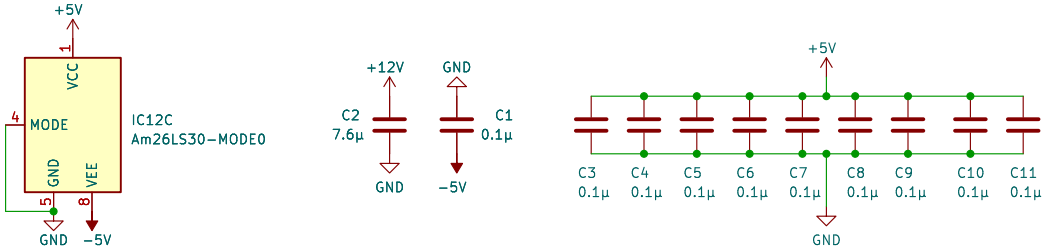

Apple II networking card
by Digicard
captured by Mark Aikens

Sheet: /Transceivers/
File: transceivers.kicad_sch

Title: Digicard D-Net

Size: USLetter	Date: 2023-12-19	Rev: 3
KiCad E.D.A. kicad 7.0.6		Id: 2/2