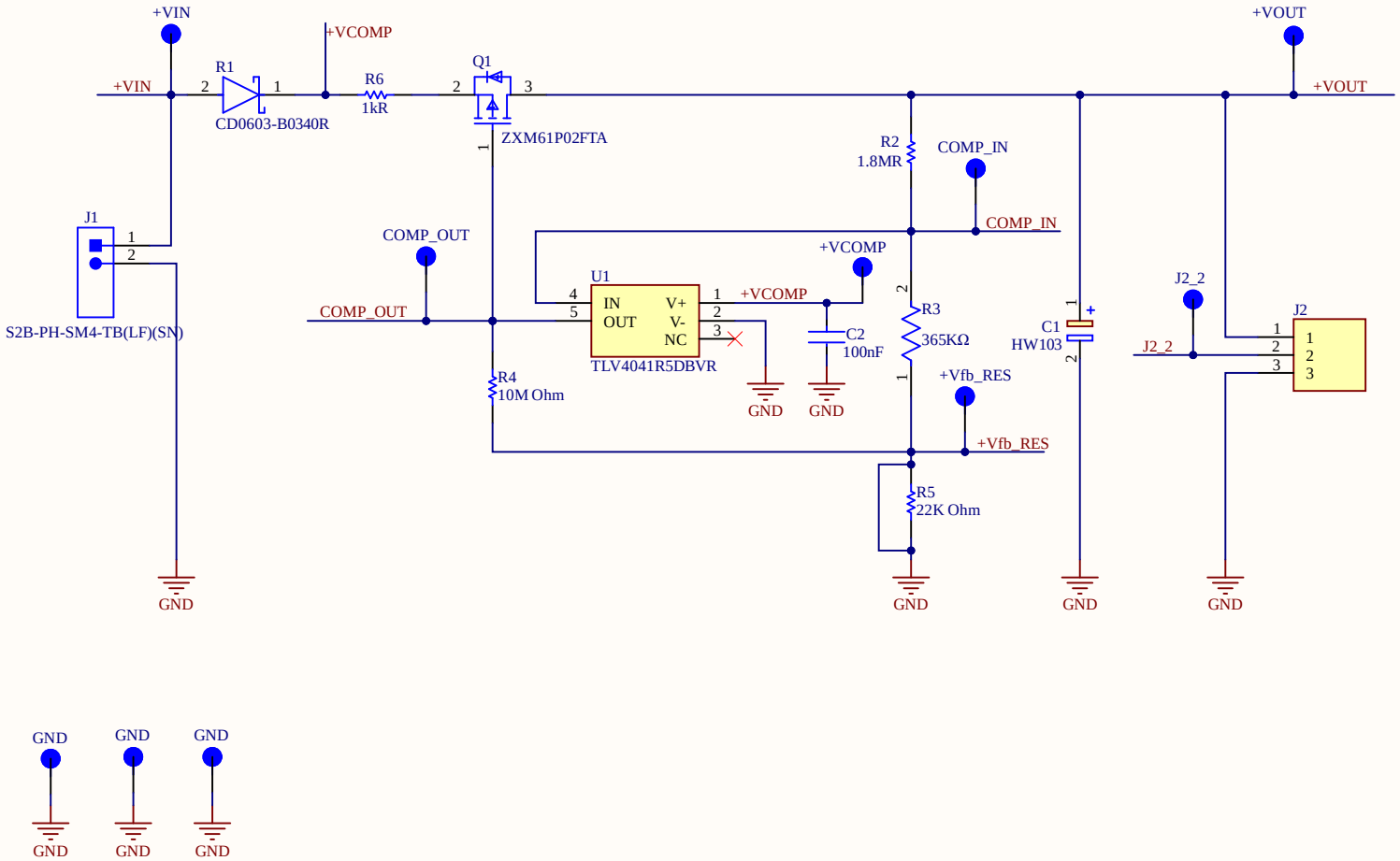

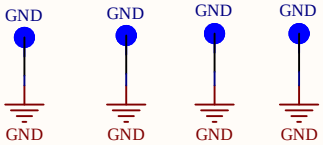

Drawing Number : 234001419

MCCI Corporation

File: Model-4906-SuperCap-Buffer-Wing.SchDoc

Title: SuperCap-Buffer-Wing

Rev: A-1

Size: A4 | Date: 22-06-2022 | Sheet: 1 / 1