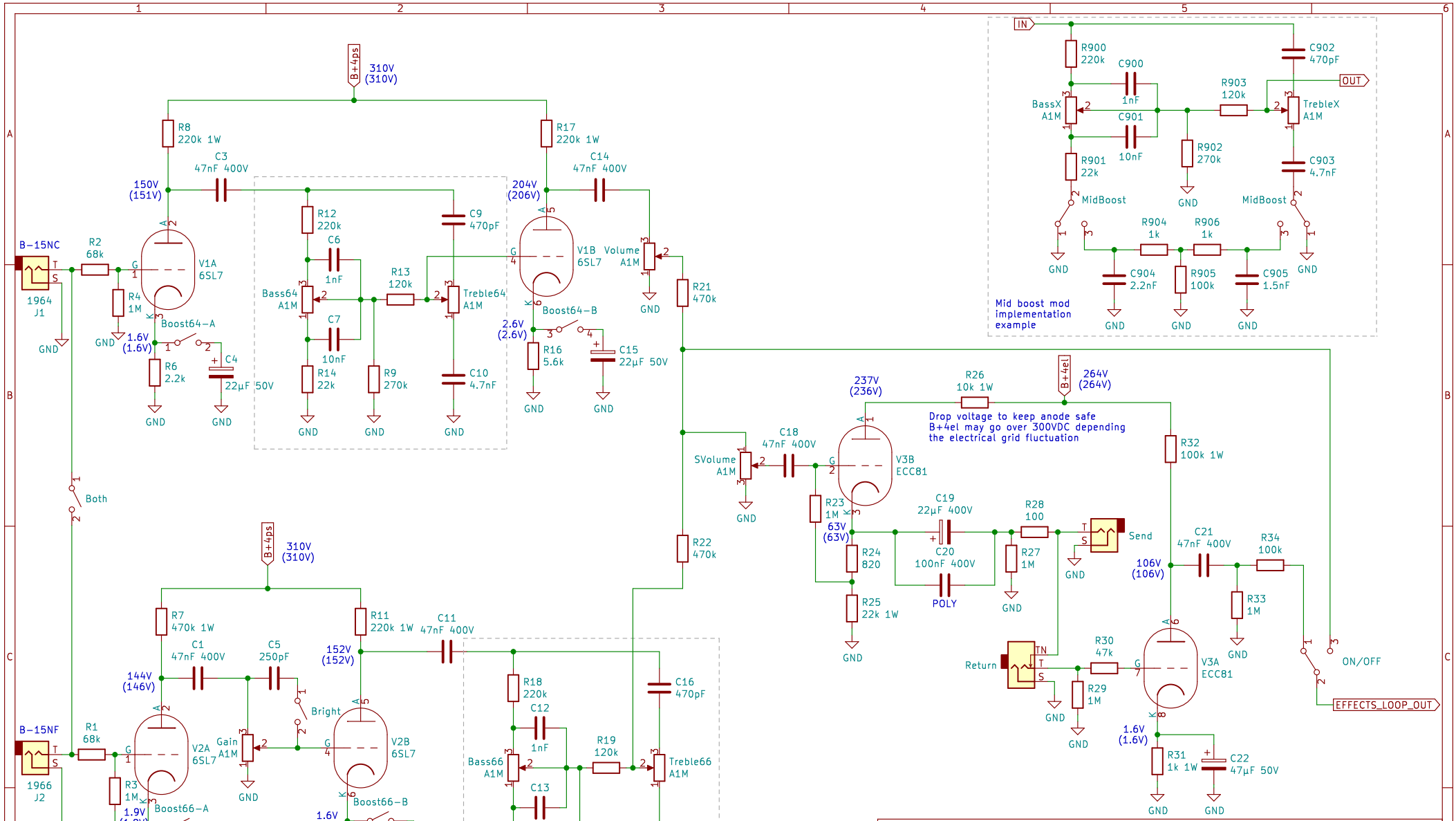


Ampeg Heritage B15 with custom mods
D.C. voltage reading with no signal inserted at fixed bias 70%
(1964 bias setting voltages shown in parenthesis)
All resistors are 1/2W unless otherwise specified
**https://github.com/mdouchement/Ampeg-HB15**

Sheet: /
File: HB15.kicad_sch

**Title: Ampeg Heritage B-15 Custom**

| | | |
|---|---|---|
| Size: A4 | Date: 2021-10-23 | **Rev: 2.2** |
| KiCad E.D.A. eeschema (6.0.1) | | Id: 1/2 |

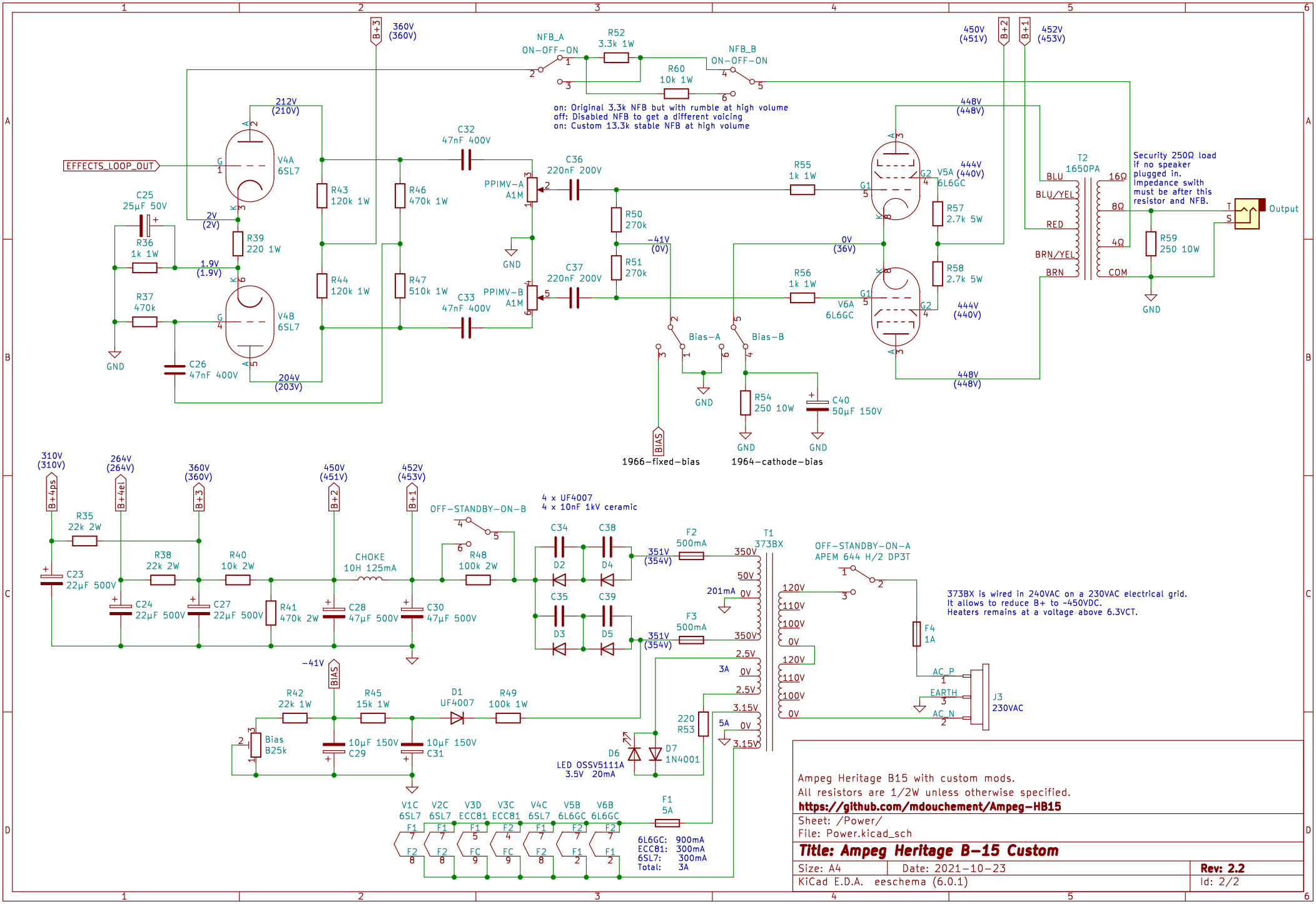
EFFECTS_LOOP_OUT
V4A 6SL7
V4B 6SL7
C25 25µF 50V
R36 1k 1W
R37 470k
R39 220 1W
C26 47nF 400V
R43 120k 1W
R44 120k 1W
R46 470k 1W
R47 510k 1W
C32 47nF 400V
C33 47nF 400V
PPIMV-A A1M
PPIMV-B A1M
C36 220nF 200V
C37 220nF 200V
R50 270k
R51 270k
NFB_A ON-OFF-ON
NFB_B ON-OFF-ON
R52 3.3k 1W
R60 10k 1W
on: Original 3.3k NFB but with rumble at high volume
off: Disabled NFB to get a different voicing
on: Custom 13.3k stable NFB at high volume
R55 1k 1W
R56 1k 1W
V5A 6L6GC
V6A 6L6GC
R57 2.7k 5W
R58 2.7k 5W
T2 1650PA
Security 250Ω load if no speaker plugged in. Impedance swith must be after this resistor and NFB.
R59 250 10W
Output
Bias-A
Bias-B
R54 250 10W
C40 50µF 150V
1966-fixed-bias
1964-cathode-bias
R35 22k 2W
C23 22µF 500V
R38 22k 2W
R40 10k 2W
C24 22µF 500V
C27 22µF 500V
R41 470k 2W
CHOKE 10H 125mA
C28 47µF 500V
C30 47µF 500V
OFF-STANDBY-ON-B
R48 100k 2W
4 x UF4007
4 x 10nF 1kV ceramic
C34
C35
C38
C39
D2
D3
D4
D5
F2 500mA
F3 500mA
T1 373BX
OFF-STANDBY-ON-A APEM 644 H/2 DP3T
373BX is wired in 240VAC on a 230VAC electrical grid.
It allows to reduce B+ to ~450VDC.
Heaters remains at a voltage above 6.3VCT.
F4 1A
J3 230VAC
R42 22k 1W
R45 15k 1W
D1 UF4007
R49 100k 1W
Bias B25k
C29 10µF 150V
C31 10µF 150V
R53 220
D6 LED OSSV5111A 3.5V 20mA
D7 1N4001
F1 5A
V1C 6SL7
V2C 6SL7
V3D ECC81
V3C ECC81
V4C 6SL7
V5B 6L6GC
V6B 6L6GC
6L6GC: 900mA
ECC81: 300mA
6SL7: 300mA
Total: 3A
Ampeg Heritage B15 with custom mods.
All resistors are 1/2W unless otherwise specified.
https://github.com/mdouchement/Ampeg-HB15
Sheet: /Power/
File: Power.kicad_sch
Title: Ampeg Heritage B-15 Custom
Size: A4
Date: 2021-10-23
Rev: 2.2
KiCad E.D.A. eeschema (6.0.1)
Id: 2/2