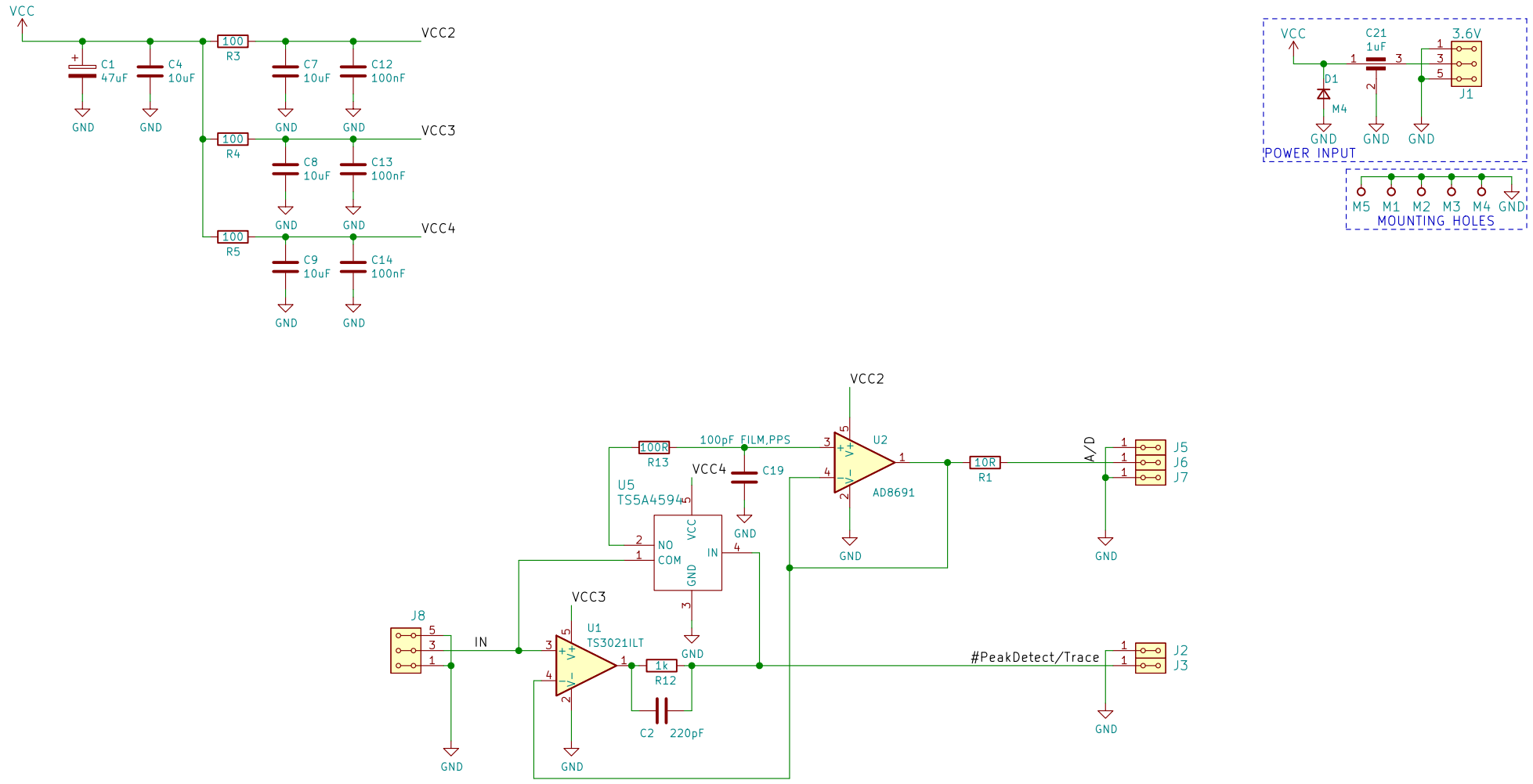

COMMENTO

Photomultiplier amplifier with sample and hold circuit

Title: PCRD06A

Author: Mlab www.mlab.cz

Size: A4	Page: 1/1	Date: 2021-12-31