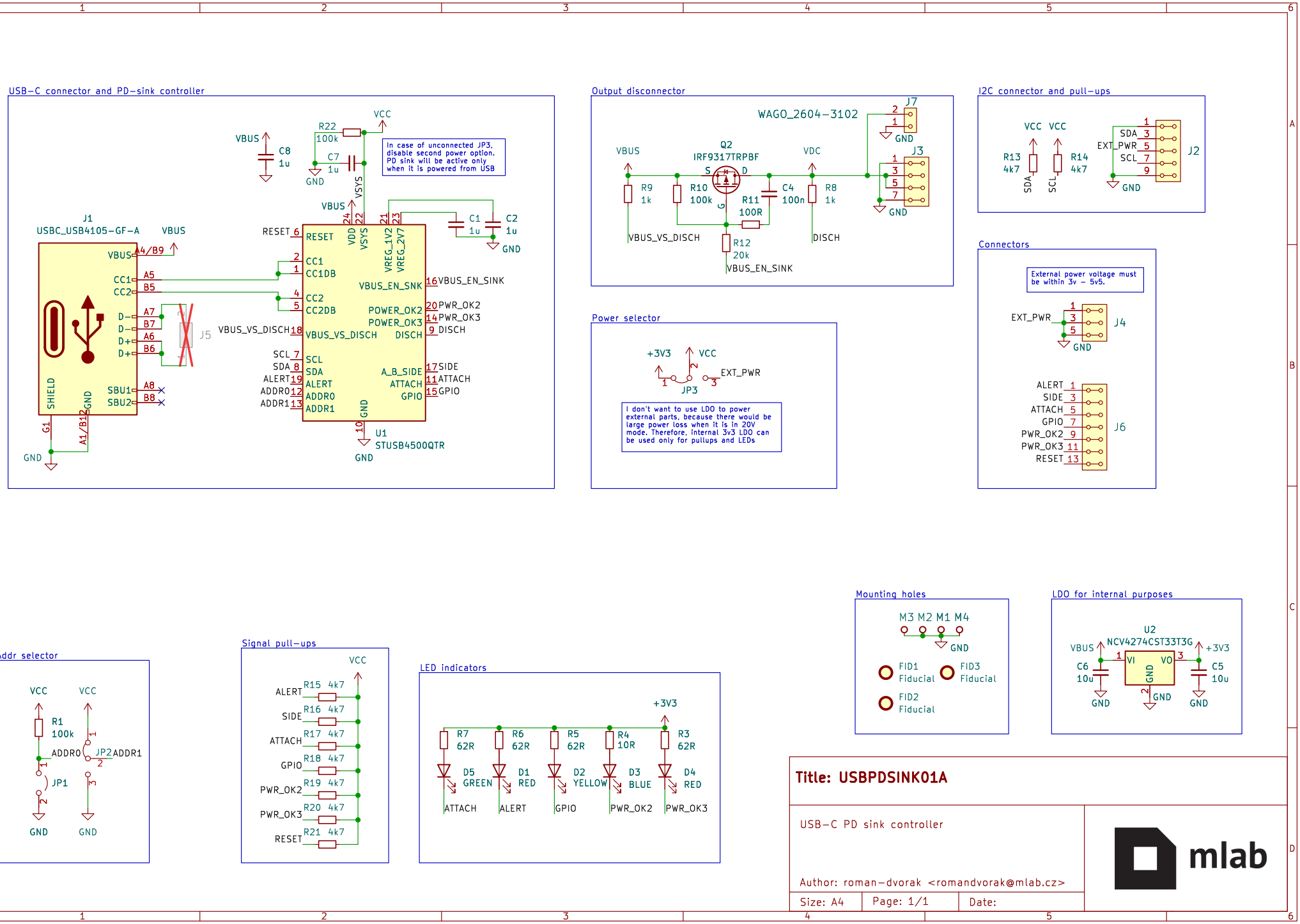
USB-C connector and PD-sink controller
In case of unconnected JP3, disable second power option. PD sink will be active only when it is powered from USB
J1
USBC_USB4105-GF-A
U1
STUSB4500QTR
Output disconnector
WAGO_2604-3102
Q2
IRF9317TRPBF
I2C connector and pull-ups
Connectors
External power voltage must be within 3v - 5v5.
Power selector
I don't want to use LDO to power external parts, because there would be large power loss when it is in 20V mode. Therefore, internal 3v3 LDO can be used only for pullups and LEDs
Mounting holes
LDO for internal purposes
Addr selector
Signal pull-ups
LED indicators
Title: USBPDSINK01A
USB-C PD sink controller
Author: roman-dvorak <romandvorak@mlab.cz>
Size: A4
Page: 1/1
Date:
mlab