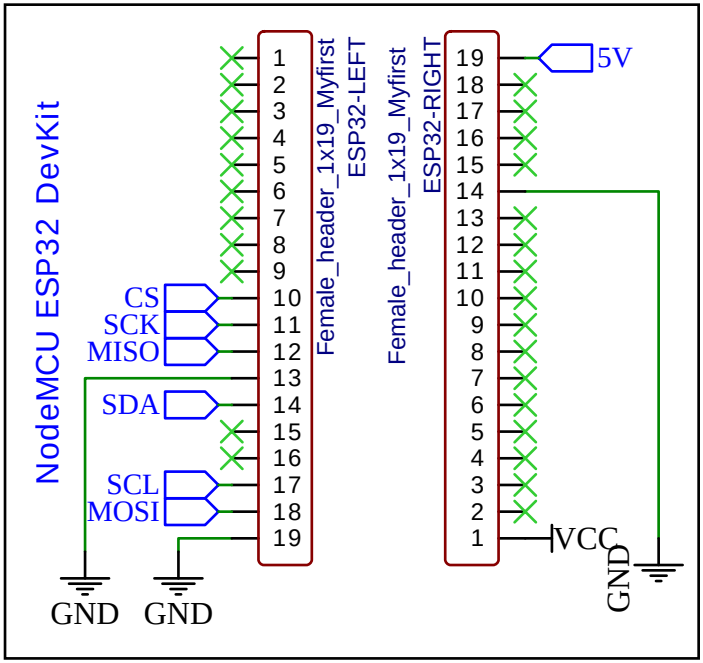

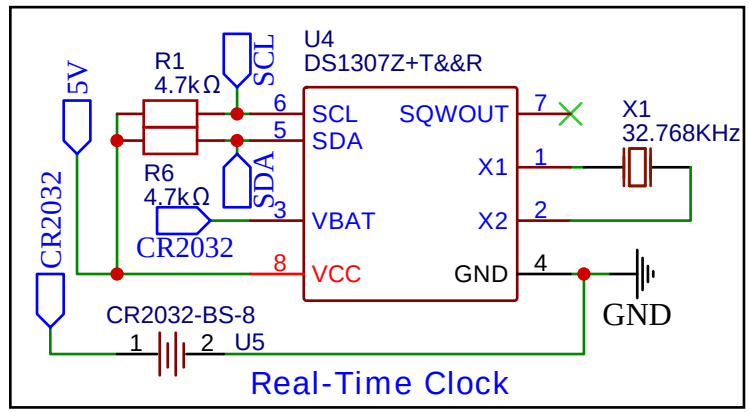

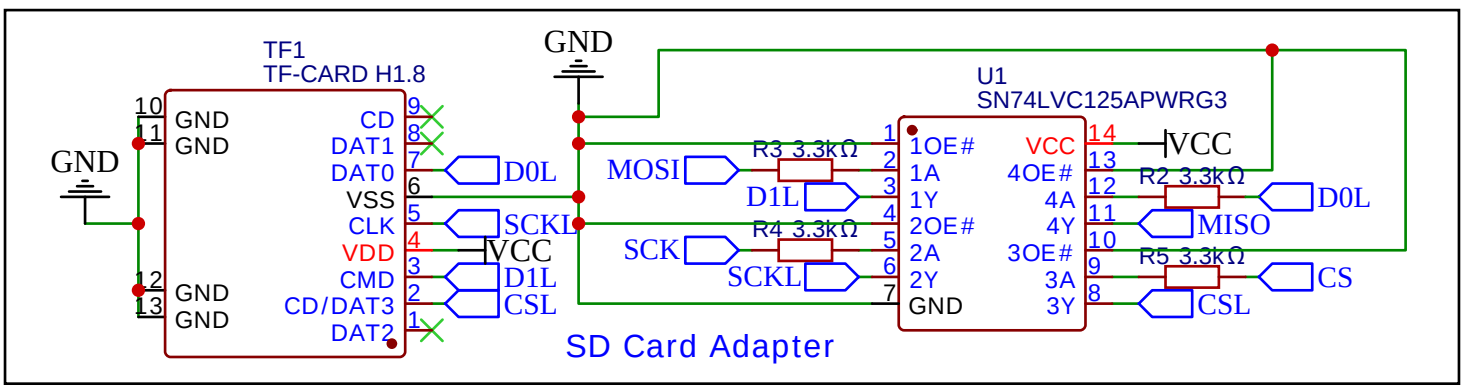

TITLE: Jessy OS Shield		REV: 1.0
	Company:	Sheet: 1/1
	Date: 2023-11-22 Drawn By: Nathanne Isip	