Dual balanced–balanced line driver
5V rail Rev D (C) 2021

S/C current @5V = 22mA.
Output resistors 220 ohms?
Electrolytics on output
Inputs biased to VQ
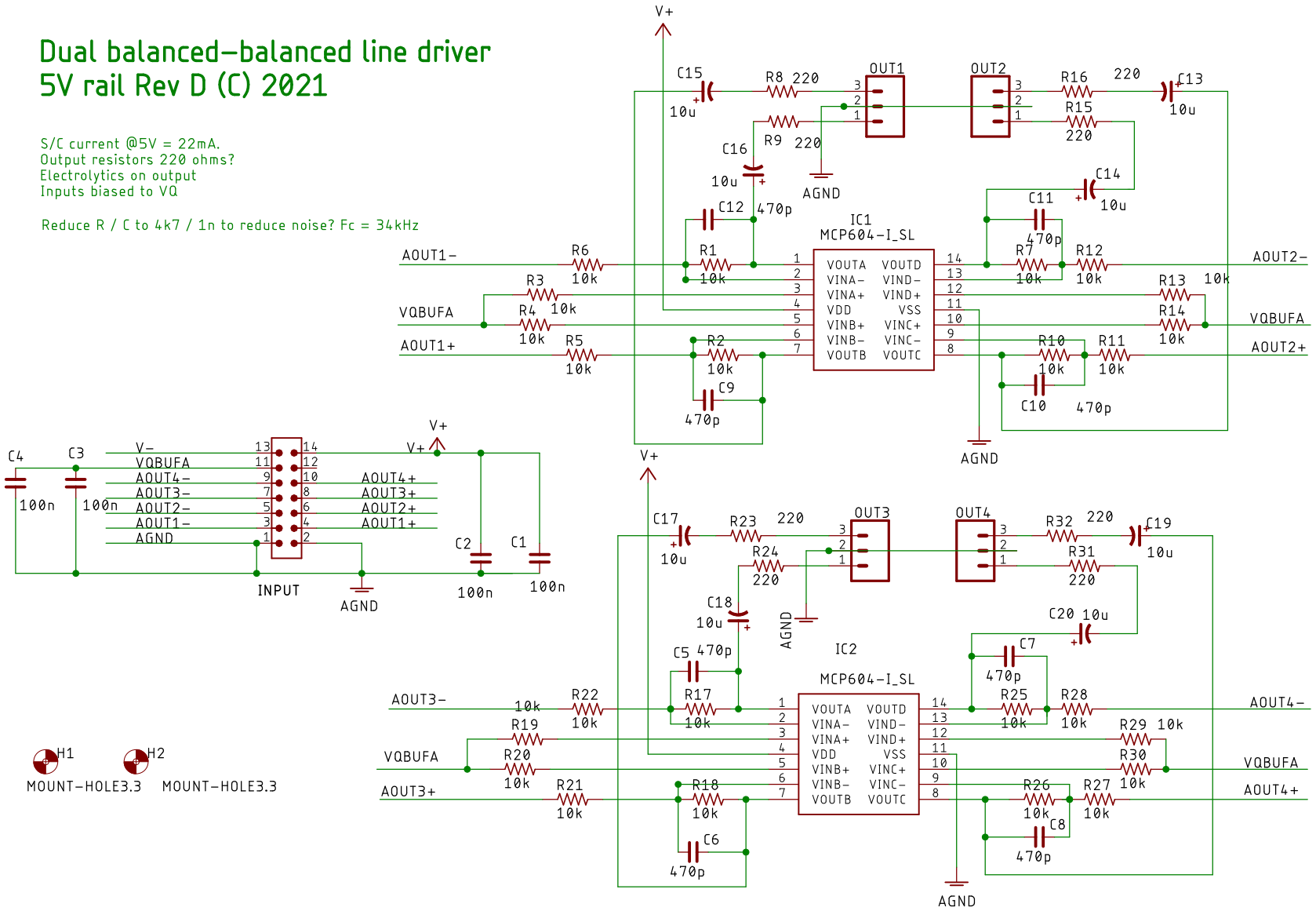
Reduce R / C to 4k7 / 1n to reduce noise? Fc = 34kHz