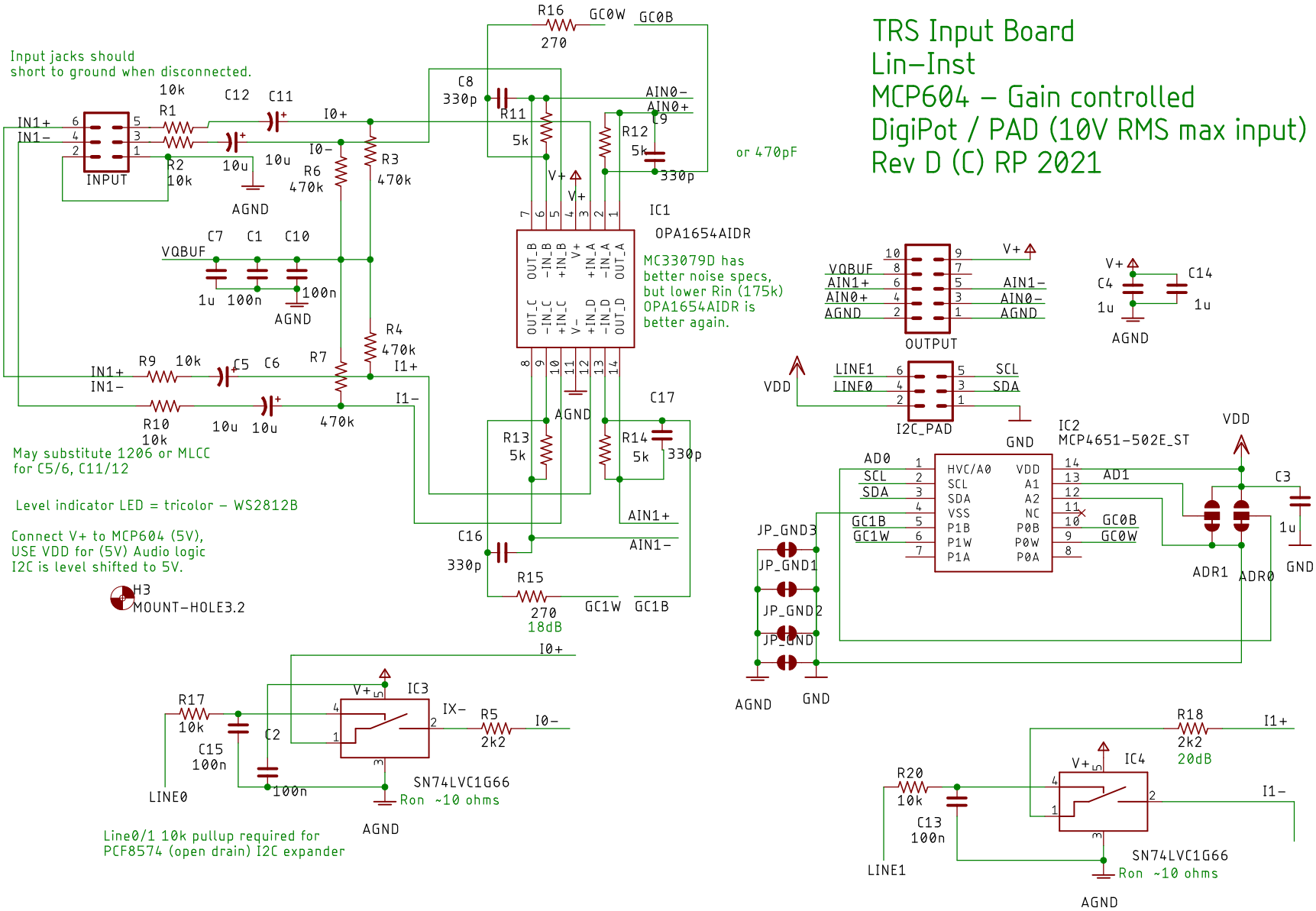TRS Input Board
Lin-Inst
MCP604 - Gain controlled
DigiPot / PAD (10V RMS max input)
Rev D (C) RP 2021