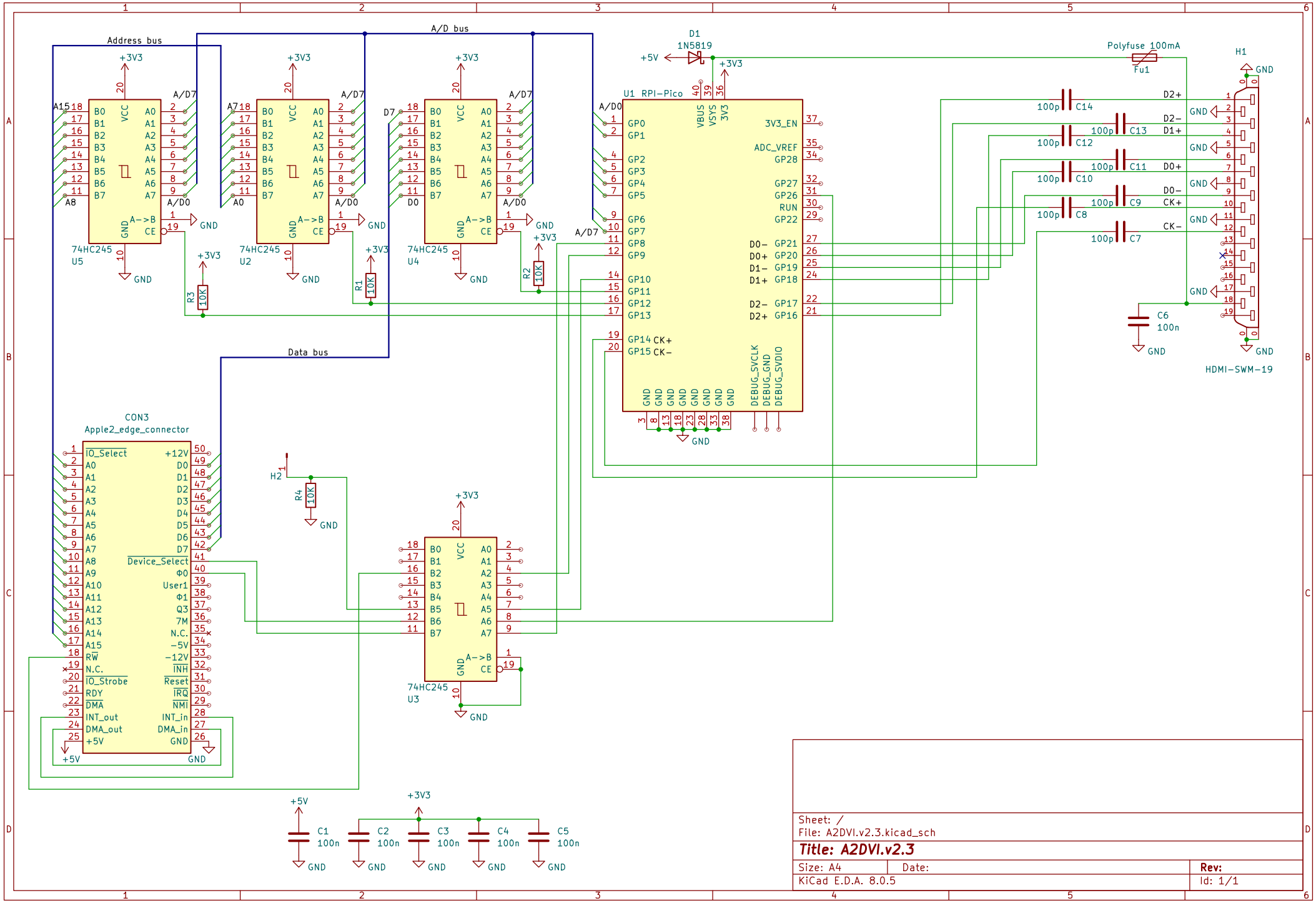
Address bus
A/D bus
Data bus
74HC245
U5
U2
U4
U3
U1 RPI-Pico
D1
1N5819
Polyfuse 100mA
Fu1
H1
HDMI-SWM-19
CON3
Apple2_edge_connector
H2
R1 10K
R2 10K
R3 10K
R4 10K
C1 100n
C2 100n
C3 100n
C4 100n
C5 100n
C6 100n
C7 100p
C8 100p
C9 100p
C10 100p
C11 100p
C12 100p
C13 100p
C14 100p
+3V3
+5V
GND
Sheet: /
File: A2DVI.v2.3.kicad_sch
Title: A2DVI.v2.3
Size: A4
Date:
Rev:
KiCad E.D.A. 8.0.5
Id: 1/1