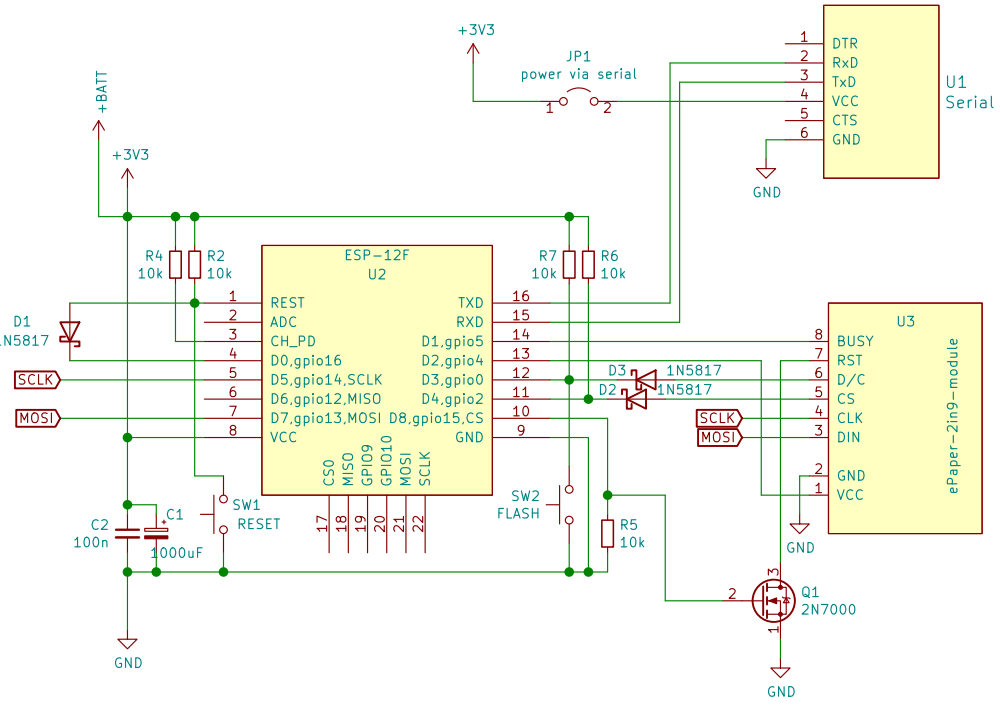

$Id: $

Sheet: /
File: MyDashboard-epaper.sch

Title: MyDashboard (ePaper version)

Size: A4	Date:	Rev:
KiCad E.D.A. kicad (5.1.10)-1		Id: 1/1