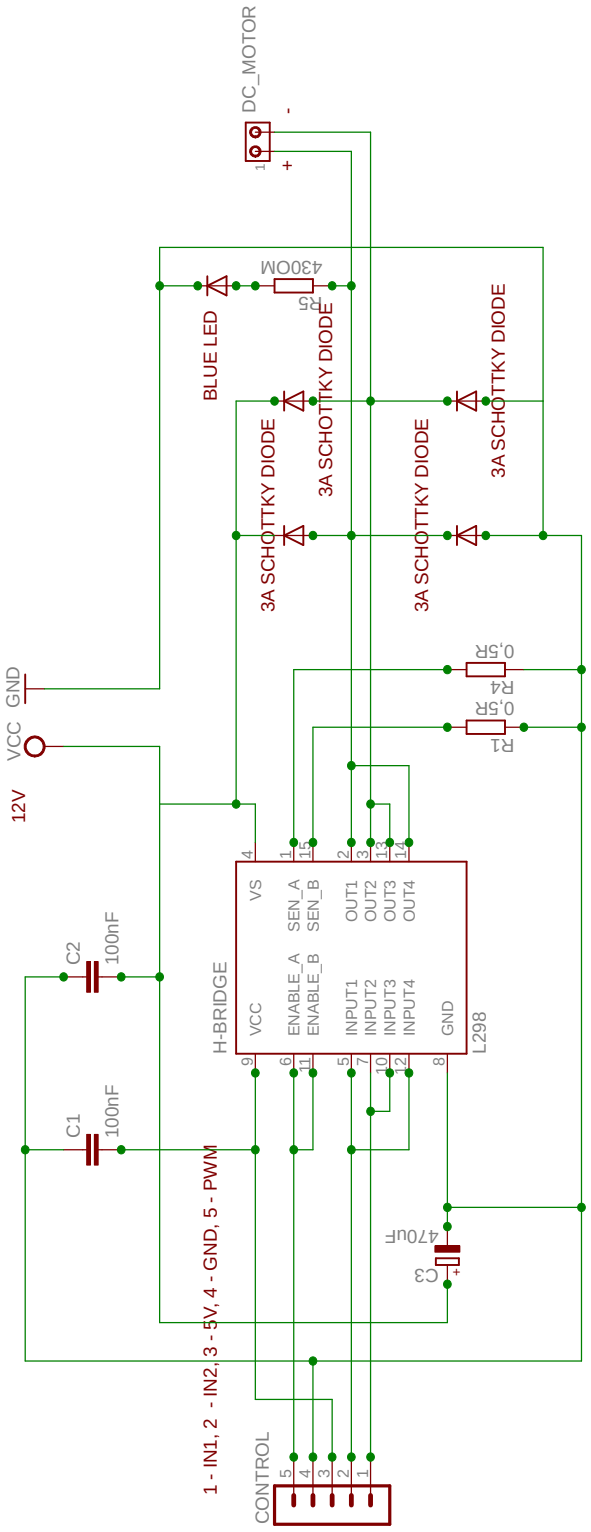
DC_MOTOR
1
+
-
R5
430OM
BLUE LED
3A SCHOTTKY DIODE
3A SCHOTTKY DIODE
3A SCHOTTKY DIODE
3A SCHOTTKY DIODE
R4
0,5R
R1
0,5R
GND
VCC
12V
C2
100nF
C1
100nF
H-BRIDGE
VS
SEN_A
SEN_B
OUT1
OUT2
OUT3
OUT4
VCC
ENABLE_A
ENABLE_B
INPUT1
INPUT2
INPUT3
INPUT4
GND
L298
C3
470uF
1 - IN1, 2 - IN2, 3 - 5V, 4 - GND, 5 - PWM
CONTROL