Bus types
General purpose bus
Ignition
Injection & LS-outputs
Analog inputs (sensors)
Discrete inputs
Auxiliary bus

J1
USB_B_Mini
VBUS
USB+
USB-
GND

P1
33311-24AW-2
OUT_IDLE
IN_CAM
CAN-
CAN+
IN_2STEP
IN_CRANK+
IN_CRANK-
OUT_FAN_RELAY
OUT_INJ2
IN_CLT
IN_TPS
IN_AFR
IN_IAT
IN_MAP2
OUT_INJ1
OUT_IGN2
OUT_IGN1
OUT_TACH
OUT_PUMP_RELAY
+5VAS
GNDA
+12V_RAW
GND

Outputs
OUT_INJ1
INJ1
Q6 VND14NV04-E
OUT_INJ2
INJ2
Q7 VND14NV04-E
OUT_FAN_RELAY
D25 B5819W
+12V_RAW
FAN_RELAY
Q8 VND14NV04-E
OUT_IDLE
D26 B5819W
IDLE
Q9 VND14NV04-E
OUT_PUMP_RELAY
D27 B5819W
Q10 AO3400A
PUMP_RELAY
OUT_TACH
D29 B5819W
Q11 AO3400A
TACH
R27 4.7k
R28 4.7k

Internal MAP
U3
MPXH6400A
Vout
GND
Vs
IN_MAP3
+5VA
C2 100n

M3
Module-vr-discrete-0.1
IN_CRANK+
IN_CRANK-
VR+
VR-
OUT
OUT_A
Thresh_IN
V5_IN
+5V
IN_CRANK
VR_ANALOG
THRESHOLD_VR

M4
Module-mega-mcu144-0.1
OUT_IGN1
OUT_IGN2
INJ1
INJ2
IDLE
PUMP_RELAY
TACH
FAN_RELAY
THRESHOLD_VR
TACH_PULLUP
CRANK_P_PULLUP
PWR_EN
TEMP_PULLUP
CRANK_N_PULLUP
2STEP_PULLDOWN
CAM_PULLDOWN
R38 4.7k
J7
J8
IN_CRANK
IN_CAM
IN_2STEP
IN_TPS
P2
IN_IAT
IN_CLT
IN_AFR
VR_ANALOG
IN_MAP2
IN_MAP3
HALL1
TLS115_PG
HALL2
VIGN
+5V
GND
SPI2_SCK
SPI2_MISO
SPI2_MOSI
SPI2_CS
SPI3_SCK
SPI3_MISO
SPI3_MOSI
SPI3_CS
CANH
CANL
CAN+
CAN-
I2C_SDA
I2C_SCL
UARTB_RX
UARTB_TX
F40x does not have UARTB
UART2_RX
UART2_TX
UART_RX
UART_TX
USBP
USBM
USBID
VBUS
USB+
USB-
SWCLK
SWDIO
SWO
nReset
BOOT0
NRESET
IN_CRANK Removed PU
IN_CAM Removed PU
IN_VSS Removed PU
IN_TPS
IN_TPS2
IN_PPS
IN_PPS2
IN_IAT Removed PU
IN_AT1
IN_CLT Removed PU
IN_AT2
IN_O2S Internal CAN Wakeup
IN_O2S2
IN_RES1
IN_RES2
IN_RES3
IN_MAP1
IN_MAP2
IN_MAP3
IN_AUX1
IN_AUX2
IN_AUX3
IN_AUX4
IN_SENS1
IN_SENS2
IN_SENS3
IN_SENS4
IN_KNOCK
IN_D1 Removed PU; R=0
IN_D2 Removed PU
IN_D3 Removed PU; R=0
IN_D4
VREF1
VREF2
IN_VIGN
VBAT
VCC
+3V3
+5VA
GNDA

M8
Module-can-0.1
CAN_VIO
CAN_RX
CAN_TX
CANL
CANH
GND
CAN2_RX
CAN2_TX
CAN2-
CAN2+
P3
P4

R39 4.7k
Q18 AO3401A
Q19 AO3400A
PWR_EN
BT_3V3
C3 100n
U4
JDY-33
Bluetooth Module
3V3
GND
TXD
RXD
IO1
IO2

MCU Debug Port
J2
Cortex_Debug
SWCLK
SWDIO
SWO
NRESET
+3V3

Power
M1
Module-power_12and5V-0.1
V12_RAW
V12_PERM
IN_VIGN
EN_5VP
PWR_EN
V12
VBAT
VIGN
5V
5VP
PG_5VP
TLS115_PG
+12V
+5V
+5VAS
+5VA is an internal 5V analog power supply
+5VAS is a protected 5V power supply for external sensors
R40 0
* Warning! Remove R40 is you use TLS115 (Inside power_12and5V)
GND test pads
J3
J4

LEDs
R1 4.7k
D12 LED-WHITE-0603
D4 1N4148WS
D11 LED-WHITE-0603
D3 1N4148WS
D10 LED-WHITE-0603
D2 1N4148WS
IN_2STEP
IN_CRANK
IN_CAM
R2 4.7k
D13 LED-RED-0603
D5 1N4148WS
D14 LED-RED-0603
D6 1N4148WS
D15 LED-RED-0603
D7 1N4148WS
D16 LED-RED-0603
D8 1N4148WS
OUT_FAN_RELAY
OUT_IDLE
OUT_INJ2
OUT_INJ1
R5 4.7k
D20 LED-GREEN-0603
D22 1N4148WS
D17 LED-RED-0603
D21 1N4148WS
R4 1k
D18 LED-BLUE-0603
D19 LED-BLUE-0603
D9 LED-RED-0603
D1 1N4148WS
OUT_IGN1
OUT_IGN2
OUT_TACH

Pullups / Pulldowns
R31 4.7k
Q13 AO3401A
Q14 AO3401A
R32 2.7k
IN_CLT
R33 2.7k
IN_IAT
TEMP_PULLUP
R30 4.7k
Q12 AO3400A
Q1 AO3400A
TACH_PULLUP
R25 AO3401A 4.7k
Q22
D24 B5819W
D28 B5819W
+12V_RAW
R47 2k
OUT_TACH
D23 PSM712-LF
CRANK_P_PULLUP
R48 4.7k
Q2 AO3400A
R26 4.7k
Q4 AO3401A
Q5 AO3401A
Q16 AO3401A
Q17 AO3401A
CRANK_N_PULLUP
Q15 AO3400A
R49 4.7k
IN_CRANK+
R21 2k
R23 2k
4k pullups
R34 2k
R36 2k
D30 BAT54S
D31 BAT54S
+5VAS
R29 1.2k
R42 1.2k
R44 3.3k
IN_CAM
R45 3.3k
IN_2STEP
R41 4.7k
R43 4.7k
Q21 AO3400A
Q20 AO3400A
CAM_PULLDOWN
2STEP_PULLDOWN

HALL sensor inputs
C5 100n
IN_CRANK-
R22 4.7k
R24 4.7k
HALL1
R35 4.7k
R37 4.7k
HALL2

Board info
FOR OFF ROAD PURPOSES ONLY
This is not for applications with emissions or safety regulations (AKA not for street use). This is for closed stages, track and equipment.
http://www.alphaxpr.com/
ALPHA X
ALPHA ECU

rusEFI	
Sheet: /	
File: alphax_2ch.kicad_sch	
Title: AlphaECU 2chan powered by rusEFI	
Size: A2	Date: 2022-12-01
KiCad E.D.A. kicad (6.0.9)	Id: 1/1
	Rev: E

M410
V12_RAW
V12_PERM
IN_VIGN
EN
V3
V1
V2
E5
V12_RAW
V12_PERM
IN_VIGN
EN_5VP
GND
V12
VBAT
VIGN
5V
5VP
PG_5PV
E2
E1
E3
E4
V4
E6
V12
VBAT
VIGN
V5
5VP
PG
S1
Hellen One : Power-Module interface
V12
LED1
R424
4.7k
GND
MHT136UGCT
V12_RAW
F410
D416
B5819W
D418
SMCJ30A
GND
R420
1
C427
4.7u
GND
L420
2.2uH
C421
10u
C422
10u
C423
10u
C424
10u
GND
GND
GND
GND
U420 LMR14020
VIN
EN
RT
SS
BOOT
SW
FB
GND
GND
2
3
4
6
1
8
5
9
7
R421
10k
C428
10n
GND
GND
C420
100n
GND
D420
SS34
L421
MWSA0503-10uH
R422
68k
C429
220p
R423
12k
GND
C425
10u
C426
10u
GND
GND
D421
P6SMB6.8CA
GND
V5
LED3
R426
1k
MHT136UGCT
GND
R428
4.7k
PG
U411
TLS115
IN
EN
ADJ
OUT
GND
GND
PG
8
7
5
1
3
9
4
EN
C414
1u
5VP
C415
1u
LED4
R427
1k
MHT136UGCT
GND
D413
1N4148WS
U410
IN
GND
EN
OUT
ADJ / BYP
1
2
3
5
4
MIC5205-3.3YM5
C413
100n
C410
47u
C412
47u
VBAT
D417
B5819W
IN_VIGN
R411
33k
R413
6.8k
C411
100n
GND
GND
VBAT
VIGN overvoltage protection
D414
1N4148WS
D410
1N4148WS
GND
VIGN
LED2
R425
4.7k
GND
MHT136UGCT
V12_PERM
R410
6.8k
D412
1N4148WS
D411
PSM712-LF
27
7

Title: ***power_12and5V***		***rusEFI EMS***
Size: A3	Author:	Revision: 0.1
Date: 06.12.2022		Sheet 1 of 1

Hellen-One Platform
https://rusefi.com/s/hellen72

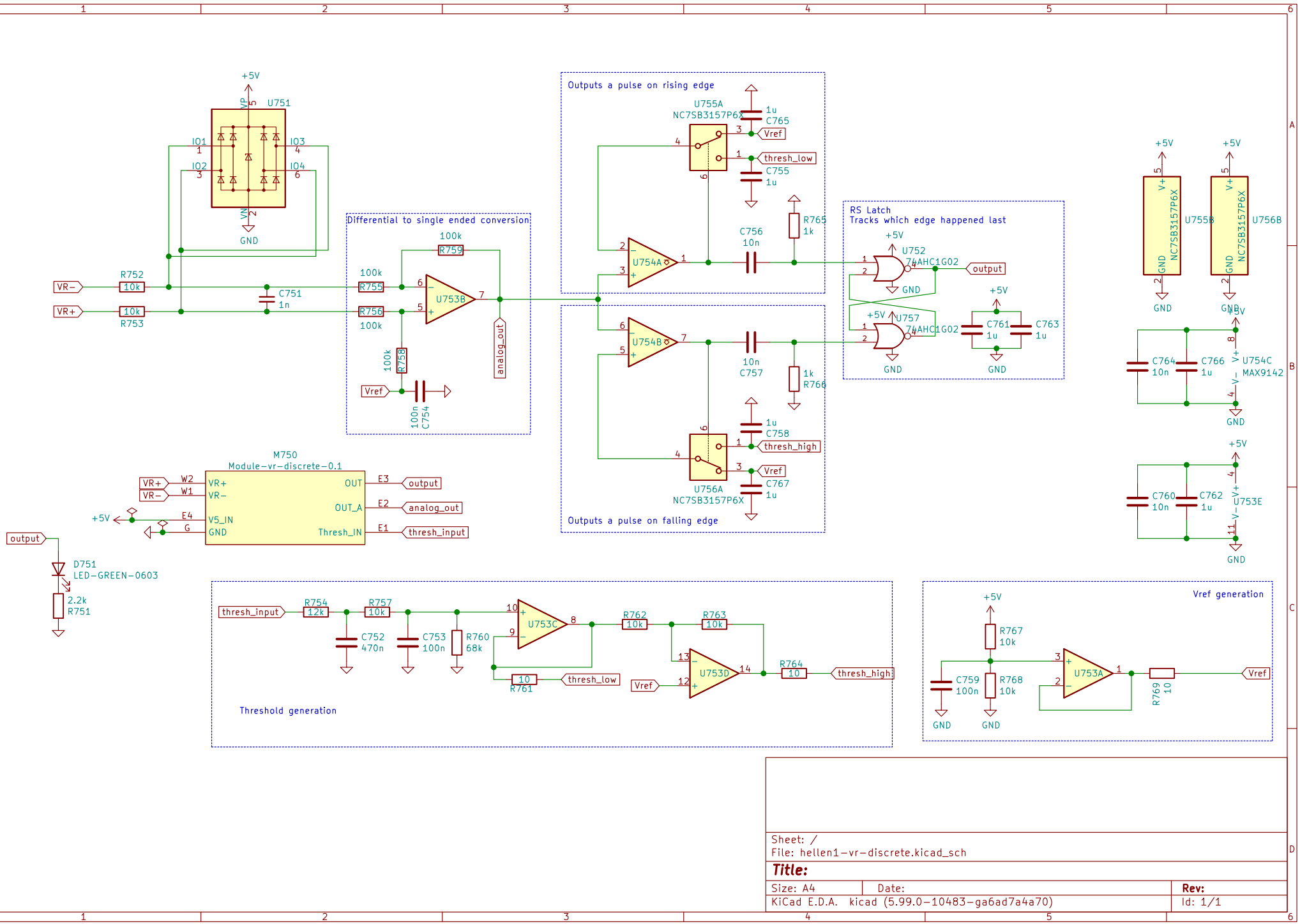
+5V
U751
IO1
IO2
IO3
IO4
GND
VR−
VR+
R752
10k
R753
10k
C751
1n
Differential to single ended conversion
100k
R759
100k
R755
100k
R756
U753B
R758
100k
Vref
100n
C754
analog_out
Outputs a pulse on rising edge
U755A
NC7SB3157P6X
1u
C765
Vref
thresh_low
C755
1u
R765
1k
C756
10n
U754A
Outputs a pulse on falling edge
U754B
10n
C757
1k
R766
U756A
NC7SB3157P6X
1u
C758
thresh_high
Vref
C767
1u
RS Latch
Tracks which edge happened last
U752
74AHC1G02
output
U757
74AHC1G02
C761
1u
C763
1u
U755B
NC7SB3157P6X
U756B
NC7SB3157P6X
C764
10n
C766
1u
U754C
MAX9142
C760
10n
C762
1u
U753E
M750
Module−vr−discrete−0.1
VR+
VR−
W2
W1
VR+
VR−
V5_IN
GND
OUT
OUT_A
Thresh_IN
E3
E2
E1
E4
G
output
analog_out
thresh_input
output
D751
LED−GREEN−0603
2.2k
R751
thresh_input
R754
12k
R757
10k
C752
470n
C753
100n
R760
68k
U753C
R762
10k
R763
10k
U753D
R764
10
thresh_high
10
R761
thresh_low
Vref
Threshold generation
Vref generation
R767
10k
C759
100n
R768
10k
U753A
R769
10
Vref
Sheet: /
File: hellen1−vr−discrete.kicad_sch
Title:
Size: A4
Date:
Rev:
KiCad E.D.A. kicad (5.99.0−10483−ga6ad7a4a70)
Id: 1/1

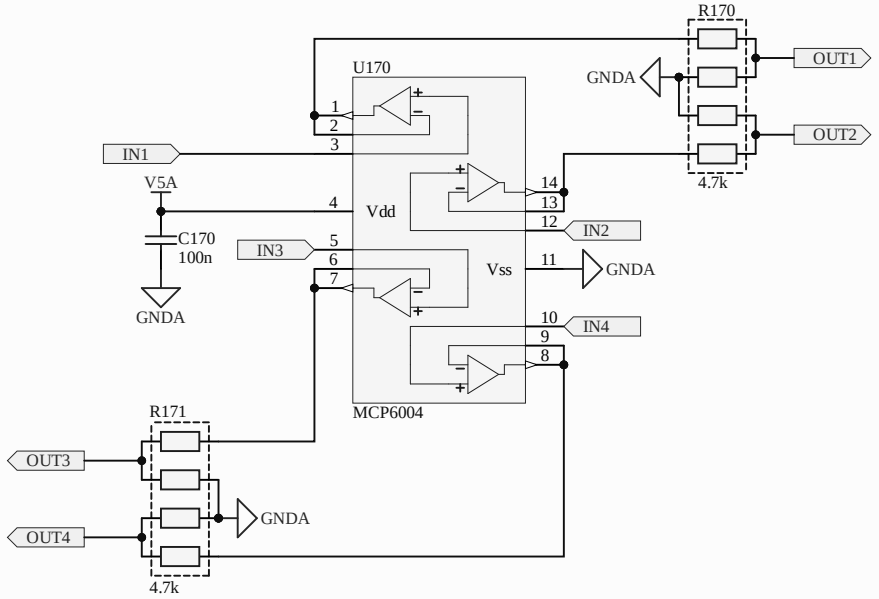
R170
U170
GNDA
OUT1
OUT2
IN1
V5A
Vdd
4.7k
C170
100n
IN3
IN2
Vss
GNDA
GNDA
IN4
MCP6004
R171
OUT3
GNDA
OUT4
4.7k

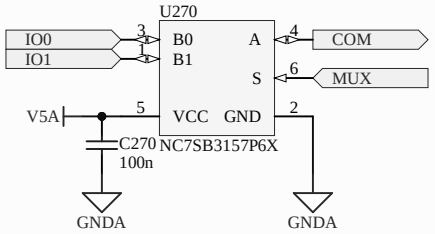
U270
IO0
IO1
3
1
B0
B1
A
S
4
6
COM
MUX
V5A
5
VCC
GND
2
C270
100n
NC7SB3157P6X
GNDA
GNDA

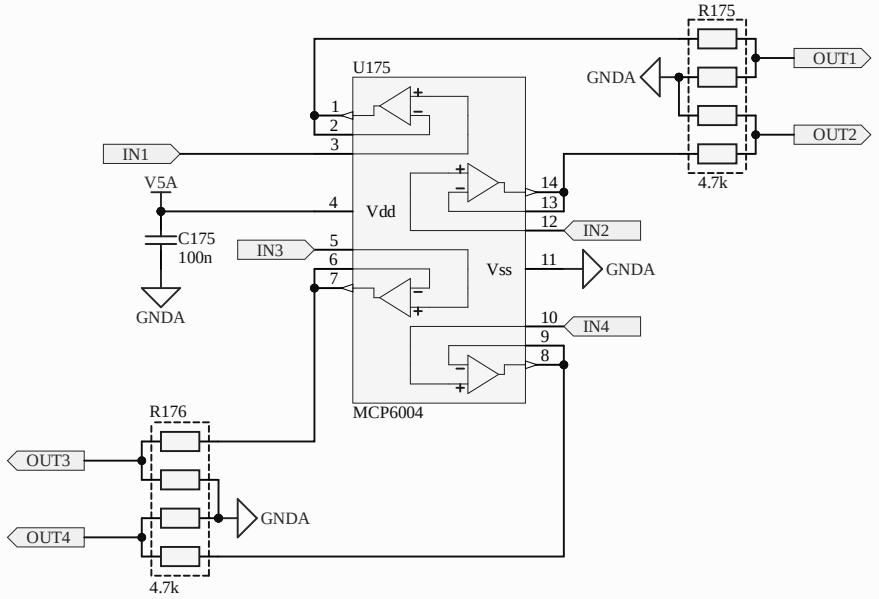
R175
U175
GNDA
OUT1
OUT2
IN1
V5A
Vdd
4.7k
C175
100n
IN3
IN2
Vss
GNDA
GNDA
IN4
MCP6004
R176
OUT3
GNDA
OUT4
4.7k

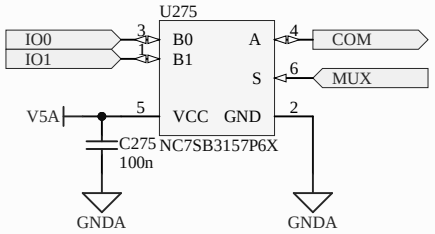
U275
IO0
IO1
3
1
B0
B1
A
S
4
6
COM
MUX
V5A
5
VCC
GND
2
C275
100n
NC7SB3157P6X
GNDA
GNDA

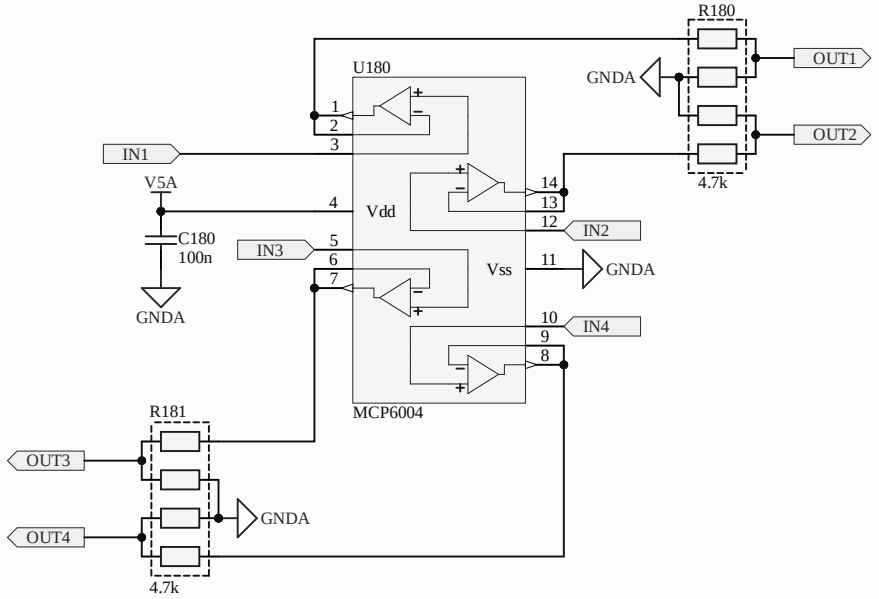
R180
U180
GNDA
OUT1
OUT2
IN1
V5A
Vdd
4.7k
C180
100n
IN3
IN2
Vss
GNDA
GNDA
IN4
MCP6004
R181
OUT3
GNDA
OUT4
4.7k

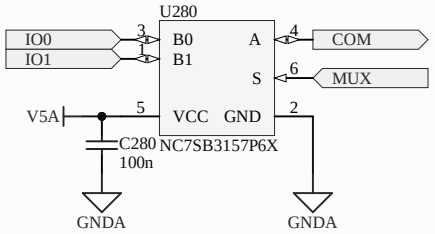
U280
IO0
IO1
3
1
B0
B1
A
S
4
6
COM
MUX
V5A
5
VCC
GND
2
C280
100n
NC7SB3157P6X
GNDA
GNDA

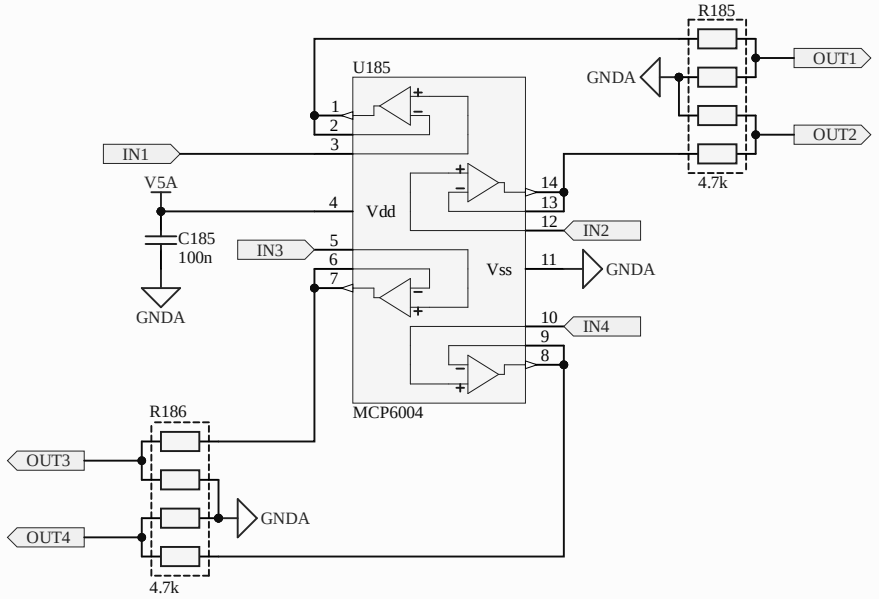
R185
U185
GNDA
OUT1
OUT2
IN1
V5A
4
Vdd
14
13
12
IN2
C185
100n
IN3
5
6
7
Vss
11
GNDA
GNDA
10
IN4
9
8
MCP6004
R186
OUT3
OUT4
GNDA
4.7k
4.7k

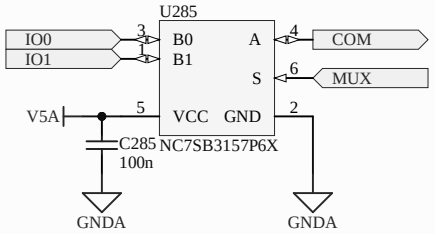
U285
IO0
IO1
3
1
B0
B1
A
S
4
6
COM
MUX
V5A
5
VCC
GND
2
C285
100n
NC7SB3157P6X
GNDA
GNDA

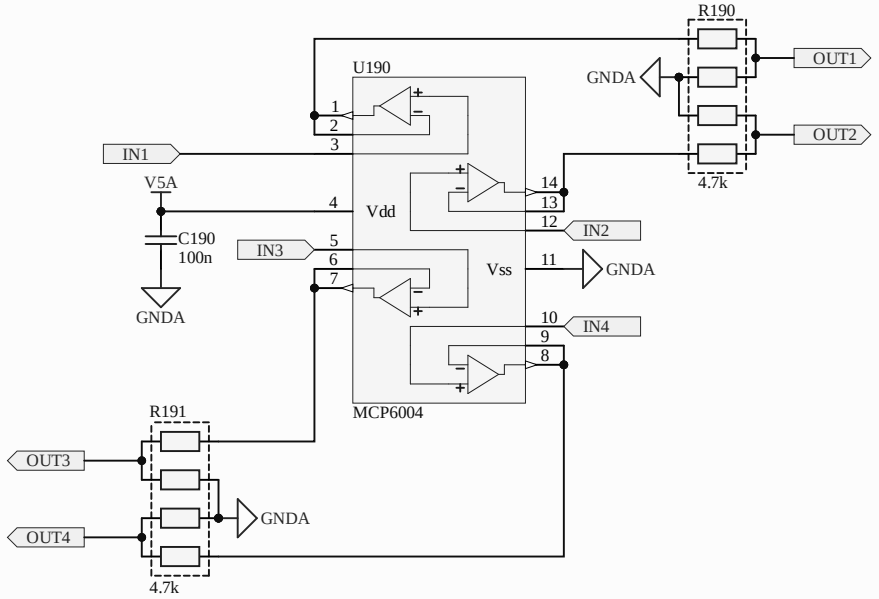
R190
U190
GNDA
OUT1
OUT2
IN1
V5A
Vdd
4.7k
C190
100n
IN3
IN2
Vss
GNDA
GNDA
IN4
MCP6004
R191
OUT3
GNDA
OUT4
4.7k

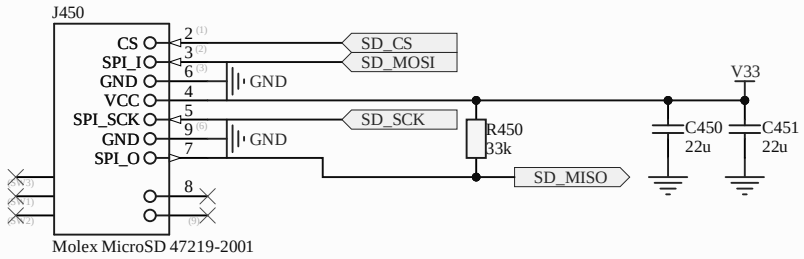
J450
CS
SPI_I
GND
VCC
SPI_SCK
GND
SPI_O
2
3
6
4
5
9
7
8
GND
GND
SD_CS
SD_MOSI
SD_SCK
SD_MISO
R450
33k
C450
22u
C451
22u
V33
Molex MicroSD 47219-2001

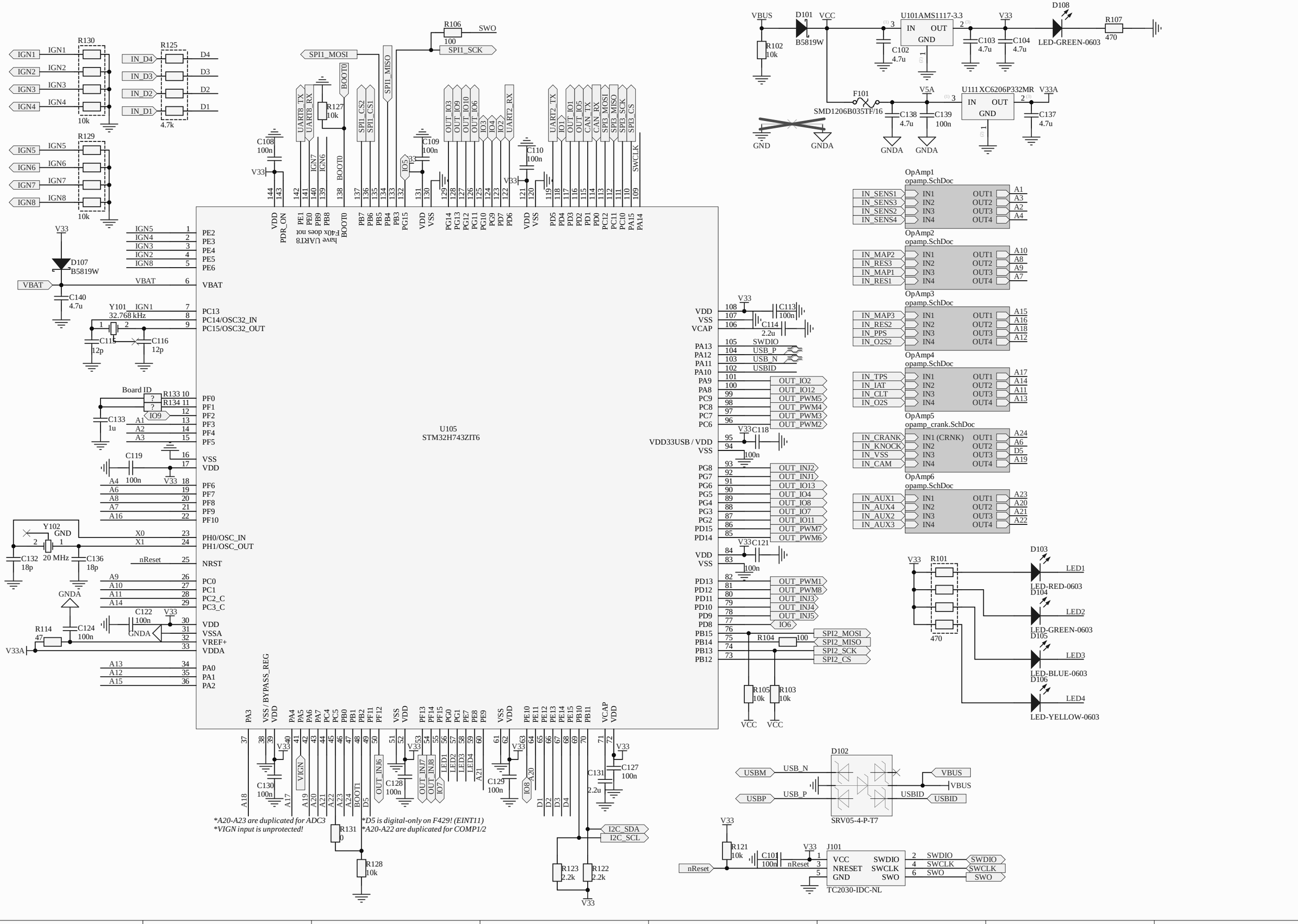
R130
IGN1
IGN2
IGN3
IGN4
10k
R125
IN_D4
IN_D3
IN_D2
IN_D1
D4
D3
D2
D1
4.7k
R129
IGN5
IGN6
IGN7
IGN8
10k
R106
SWO
100
SPI1_SCK
SPI1_MOSI
SPI1_MISO
R127
10k
BOOT0
UART8_TX
UART8_RX
IGN7
IGN6
SPI1_CS2
SPI1_CS1
C108
100n
C109
100n
C110
100n
V33
OUT_IO3
OUT_IO9
OUT_IO10
OUT_IO6
IO3
IO4
IO2
UART2_RX
UART2_TX
IO1
OUT_IO1
OUT_IO5
CAN_TX
CAN_RX
SPI3_MOSI
SPI3_MISO
SPI3_SCK
SPI3_CS
SWCLK
VDD
PDR_ON
PE1
PE0
PB9
PB8
BOOT0
PB7
PB6
PB5
PB4
PB3
PG15
PG14
PG13
PG12
PG11
PG10
PG9
PD7
PD6
PD5
PD4
PD3
PD2
PD1
PD0
PC12
PC11
PC10
PA15
PA14
VSS
have UART8
F40x does not
VBUS
D101
B5819W
VCC
R102
10k
U101AMS1117-3.3
IN
OUT
GND
C102
4.7u
C103
4.7u
C104
4.7u
D108
LED-GREEN-0603
R107
470
F101
SMD1206B035TF/16
V5A
U111 XC6206P332MR
V33A
C138
4.7u
C139
100n
C137
4.7u
GND
GNDA
IGN5
IGN4
IGN3
IGN2
IGN8
PE2
PE3
PE4
PE5
PE6
VBAT
D107
B5819W
C140
4.7u
Y101
32.768 kHz
C115
12p
C116
12p
PC13
PC14/OSC32_IN
PC15/OSC32_OUT
Board ID
R133
R134
IO9
C133
1u
PF0
PF1
PF2
PF3
PF4
PF5
C119
100n
VSS
VDD
PF6
PF7
PF8
PF9
PF10
Y102
20 MHz
C132
18p
C136
18p
PH0/OSC_IN
PH1/OSC_OUT
nReset
NRST
PC0
PC1
PC2_C
PC3_C
C122
100n
R114
47
C124
100n
VDD
VSSA
VREF+
VDDA
V33A
PA0
PA1
PA2
U105
STM32H743ZIT6
VDD
VSS
VCAP
C113
100n
C114
2.2u
PA13
PA12
PA11
PA10
SWDIO
USB_P
USB_N
USBID
PA9
PA8
PC9
PC8
PC7
PC6
OUT_IO2
OUT_IO12
OUT_PWM5
OUT_PWM4
OUT_PWM3
OUT_PWM2
VDD33USB / VDD
C118
100n
PG8
PG7
PG6
PG5
PG4
PG3
PG2
PD15
PD14
OUT_INJ2
OUT_INJ1
OUT_IO13
OUT_IO4
OUT_IO8
OUT_IO7
OUT_IO11
OUT_PWM7
OUT_PWM6
C121
100n
PD13
PD12
PD11
PD10
PD9
PD8
PB15
PB14
PB13
PB12
OUT_PWM1
OUT_PWM8
OUT_INJ3
OUT_INJ4
OUT_INJ5
IO6
SPI2_MOSI
SPI2_MISO
SPI2_SCK
SPI2_CS
R104
100
R105
10k
R103
10k
VCC
OpAmp1
opamp.SchDoc
IN_SENS1
IN_SENS3
IN_SENS2
IN_SENS4
IN1
IN2
IN3
IN4
OUT1
OUT2
OUT3
OUT4
A1
A3
A2
A4
OpAmp2
opamp.SchDoc
IN_MAP2
IN_RES3
IN_MAP1
IN_RES1
A10
A8
A9
A7
OpAmp3
opamp.SchDoc
IN_MAP3
IN_RES2
IN_PPS
IN_O2S2
A15
A16
A18
A12
OpAmp4
opamp.SchDoc
IN_TPS
IN_IAT
IN_CLT
IN_O2S
A17
A14
A11
A13
OpAmp5
opamp_crank.SchDoc
IN_CRANK
IN_KNOCK
IN_VSS
IN_CAM
IN1 (CRNK)
A24
A6
D5
A19
OpAmp6
opamp.SchDoc
IN_AUX1
IN_AUX4
IN_AUX2
IN_AUX3
A23
A20
A21
A22
R101
470
D103
LED1
LED-RED-0603
D104
LED2
LED-GREEN-0603
D105
LED3
LED-BLUE-0603
D106
LED4
LED-YELLOW-0603
PA3
VSS / BYPASS_REG
PA4
PA5
PA6
PA7
PC4
PC5
PB0
PB1
PB2
PF11
PF12
PF13
PF14
PF15
PG0
PG1
PE7
PE8
PE9
PE10
PE11
PE12
PE13
PE14
PE15
PB10
PB11
VIGN
OUT_INJ6
OUT_INJ7
OUT_INJ8
IO7
IO8
LED1
LED2
LED3
LED4
A21
A20
BOOT1
D5
D1
D2
D3
D4
A18
A19
A17
C130
100n
C128
100n
C129
100n
C131
2.2u
C127
100n
*A20-A23 are duplicated for ADC3
*VIGN input is unprotected!
*D5 is digital-only on F429! (EINT11)
*A20-A22 are duplicated for COMP1/2
R131
0
R128
10k
R123
2.2k
R122
2.2k
I2C_SDA
I2C_SCL
D102
USBM
USBP
VBUS
SRV05-4-P-T7
R121
10k
C101
100n
J101
VCC
NRESET
GND
SWDIO
SWCLK
SWO
TC2030-IDC-NL

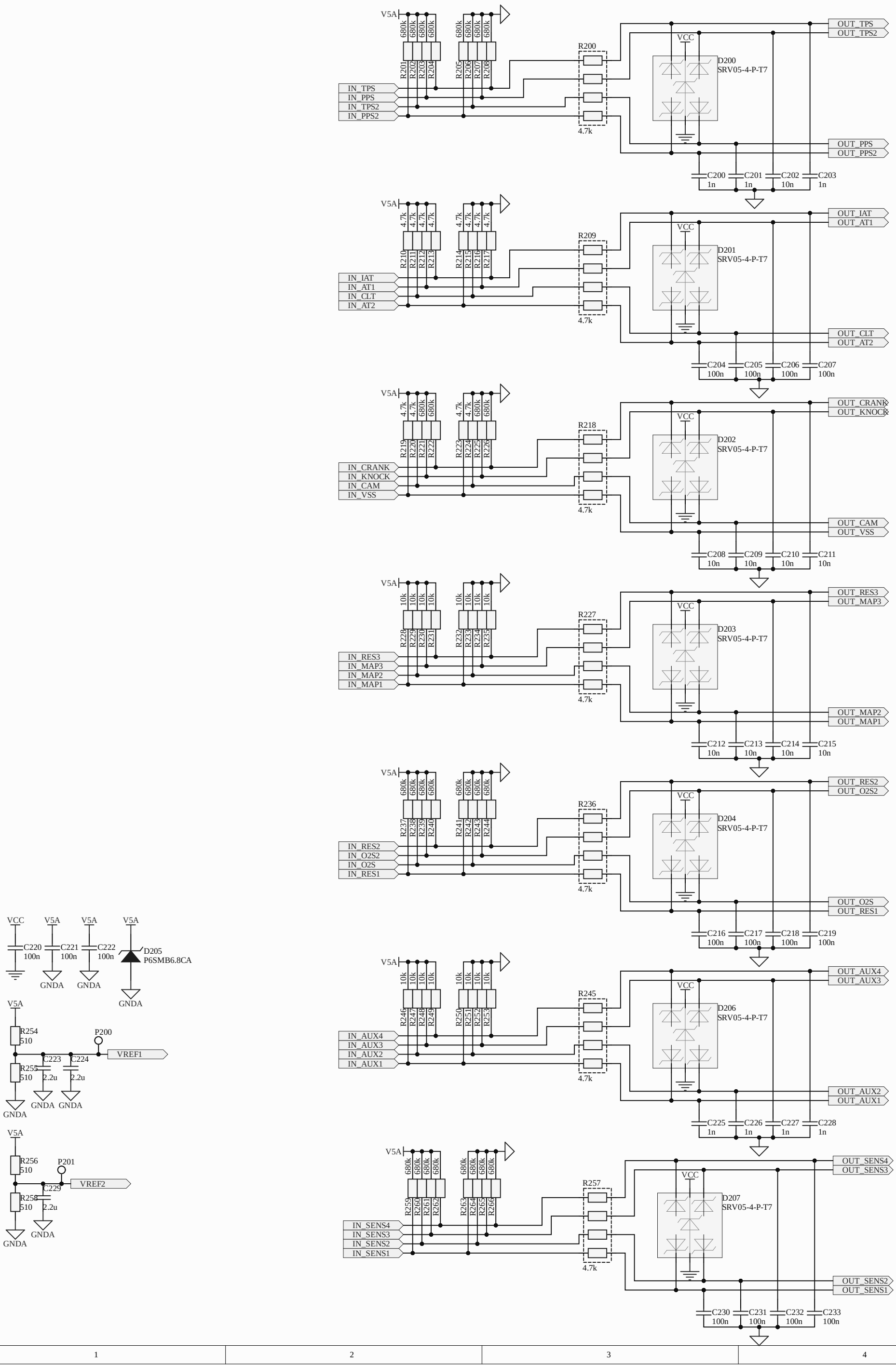
V5A
680k
R201
R202
R203
R204
R205
R206
R207
R208
IN_TPS
IN_PPS
IN_TPS2
IN_PPS2
R200
4.7k
VCC
D200
SRV05-4-P-T7
OUT_TPS
OUT_TPS2
OUT_PPS
OUT_PPS2
C200
1n
C201
1n
C202
10n
C203
1n
4.7k
R210
R211
R212
R213
R214
R215
R216
R217
IN_IAT
IN_AT1
IN_CLT
IN_AT2
R209
D201
OUT_IAT
OUT_AT1
OUT_CLT
OUT_AT2
C204
100n
C205
100n
C206
100n
C207
100n
R219
R220
R221
R222
R223
R224
R225
R226
IN_CRANK
IN_KNOCK
IN_CAM
IN_VSS
R218
D202
OUT_CRANK
OUT_KNOCK
OUT_CAM
OUT_VSS
C208
10n
C209
10n
C210
10n
C211
10n
10k
R228
R229
R230
R231
R232
R233
R234
R235
IN_RES3
IN_MAP3
IN_MAP2
IN_MAP1
R227
D203
OUT_RES3
OUT_MAP3
OUT_MAP2
OUT_MAP1
C212
10n
C213
10n
C214
10n
C215
10n
R237
R238
R239
R240
R241
R242
R243
R244
IN_RES2
IN_O2S2
IN_O2S
IN_RES1
R236
D204
OUT_RES2
OUT_O2S2
OUT_O2S
OUT_RES1
C216
100n
C217
100n
C218
100n
C219
100n
R246
R247
R248
R249
R250
R251
R252
R253
IN_AUX4
IN_AUX3
IN_AUX2
IN_AUX1
R245
D206
OUT_AUX4
OUT_AUX3
OUT_AUX2
OUT_AUX1
C225
1n
C226
1n
C227
1n
C228
1n
R259
R260
R261
R262
R263
R264
R265
R266
IN_SENS4
IN_SENS3
IN_SENS2
IN_SENS1
R257
D207
OUT_SENS4
OUT_SENS3
OUT_SENS2
OUT_SENS1
C230
100n
C231
100n
C232
100n
C233
100n
VCC
V5A
V5A
V5A
C220
100n
C221
100n
C222
100n
D205
P6SMB6.8CA
GNDA
GNDA
GNDA
V5A
R254
510
P200
VREF1
C223
C224
R255
510
2.2u
2.2u
GNDA
GNDA
GNDA
V5A
R256
510
P201
VREF2
C229
R258
510
2.2u
GNDA
GNDA

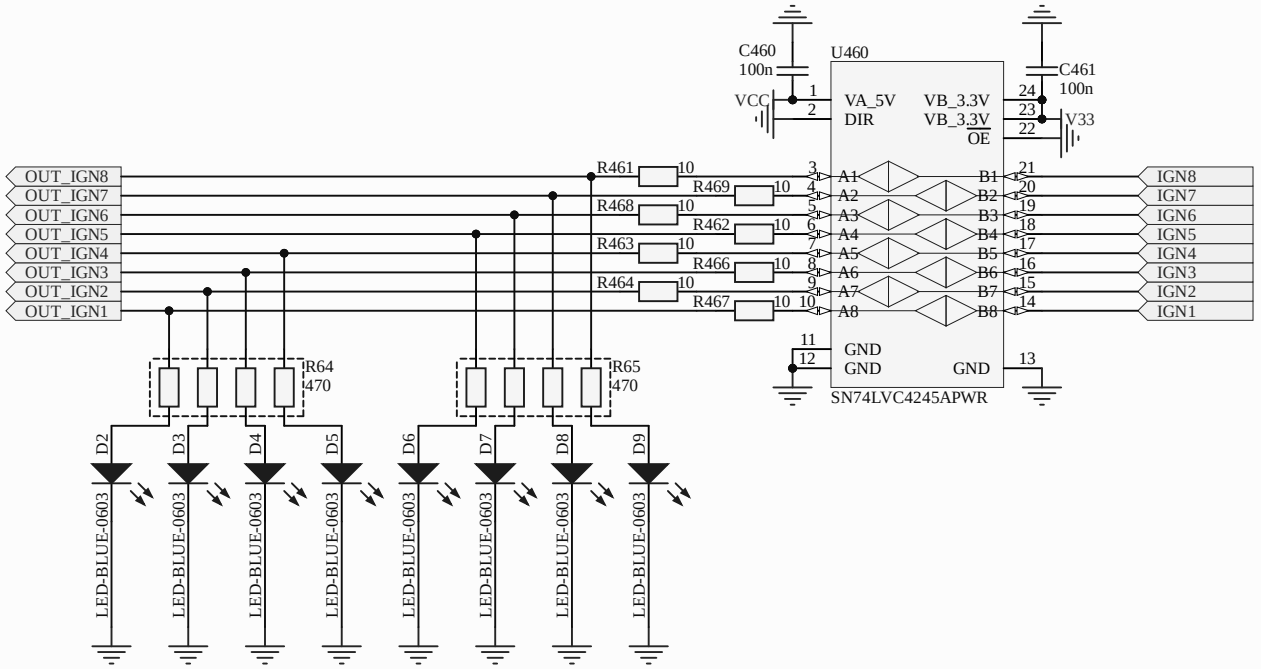
C460
100n
U460
C461
100n
VCC
VA_5V
VB_3.3V
DIR
VB_3.3V
OE
V33
GND
GND
GND
SN74LVC4245APWR
OUT_IGN8
OUT_IGN7
OUT_IGN6
OUT_IGN5
OUT_IGN4
OUT_IGN3
OUT_IGN2
OUT_IGN1
R461
R469
R468
R462
R463
R466
R464
R467
10
A1
A2
A3
A4
A5
A6
A7
A8
B1
B2
B3
B4
B5
B6
B7
B8
IGN8
IGN7
IGN6
IGN5
IGN4
IGN3
IGN2
IGN1
R64
470
R65
470
D2
D3
D4
D5
D6
D7
D8
D9
LED-BLUE-0603

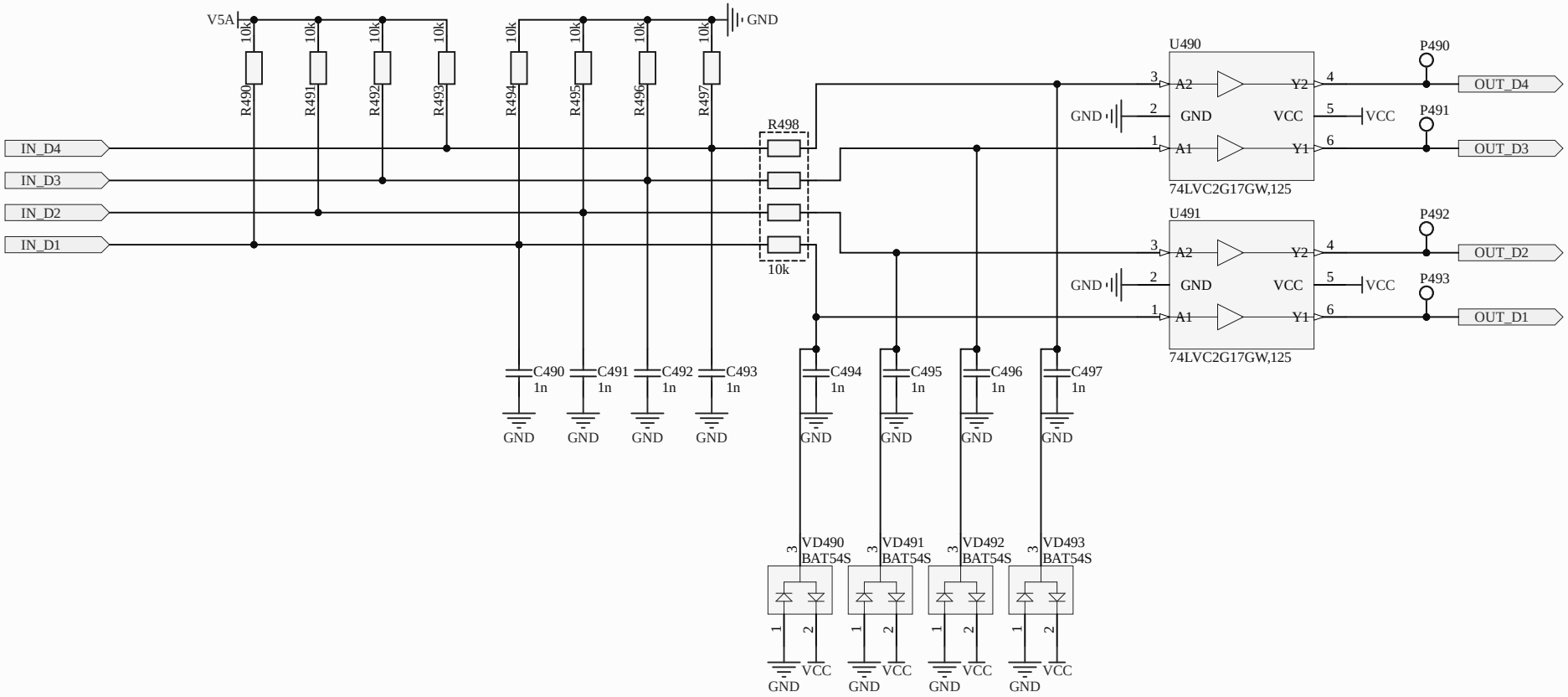
V5A
GND
R490
R491
R492
R493
R494
R495
R496
R497
10k
R498
IN_D4
IN_D3
IN_D2
IN_D1
C490
C491
C492
C493
C494
C495
C496
C497
1n
U490
U491
74LVC2G17GW,125
A1
A2
Y1
Y2
VCC
P490
P491
P492
P493
OUT_D4
OUT_D3
OUT_D2
OUT_D1
VD490
VD491
VD492
VD493
BAT54S

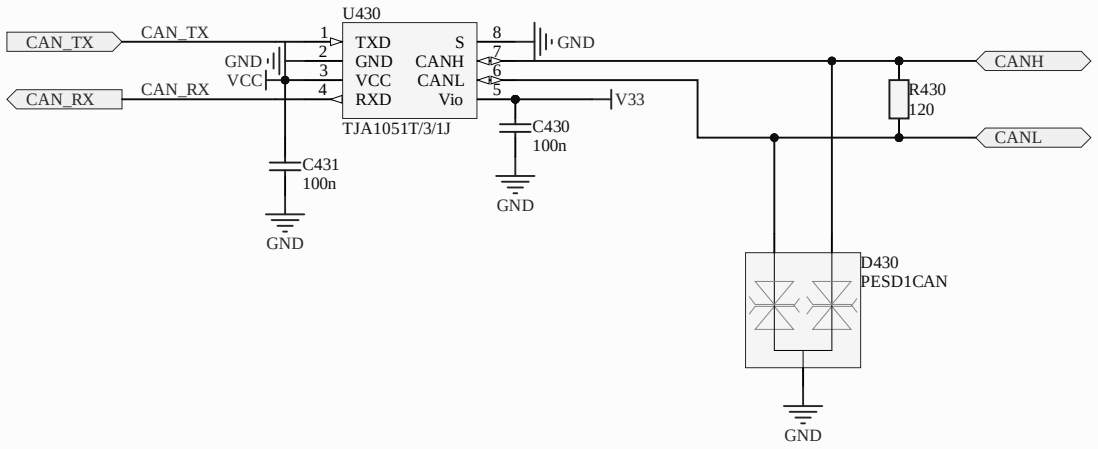
U430
CAN_TX
CAN_TX
CAN_RX
CAN_RX
GND
VCC
1
2
3
4
TXD
GND
VCC
RXD
S
CANH
CANL
Vio
8
7
6
5
GND
V33
TJA1051T/3/1J
C431
100n
C430
100n
GND
GND
R430
120
CANH
CANL
D430
PESD1CAN
GND

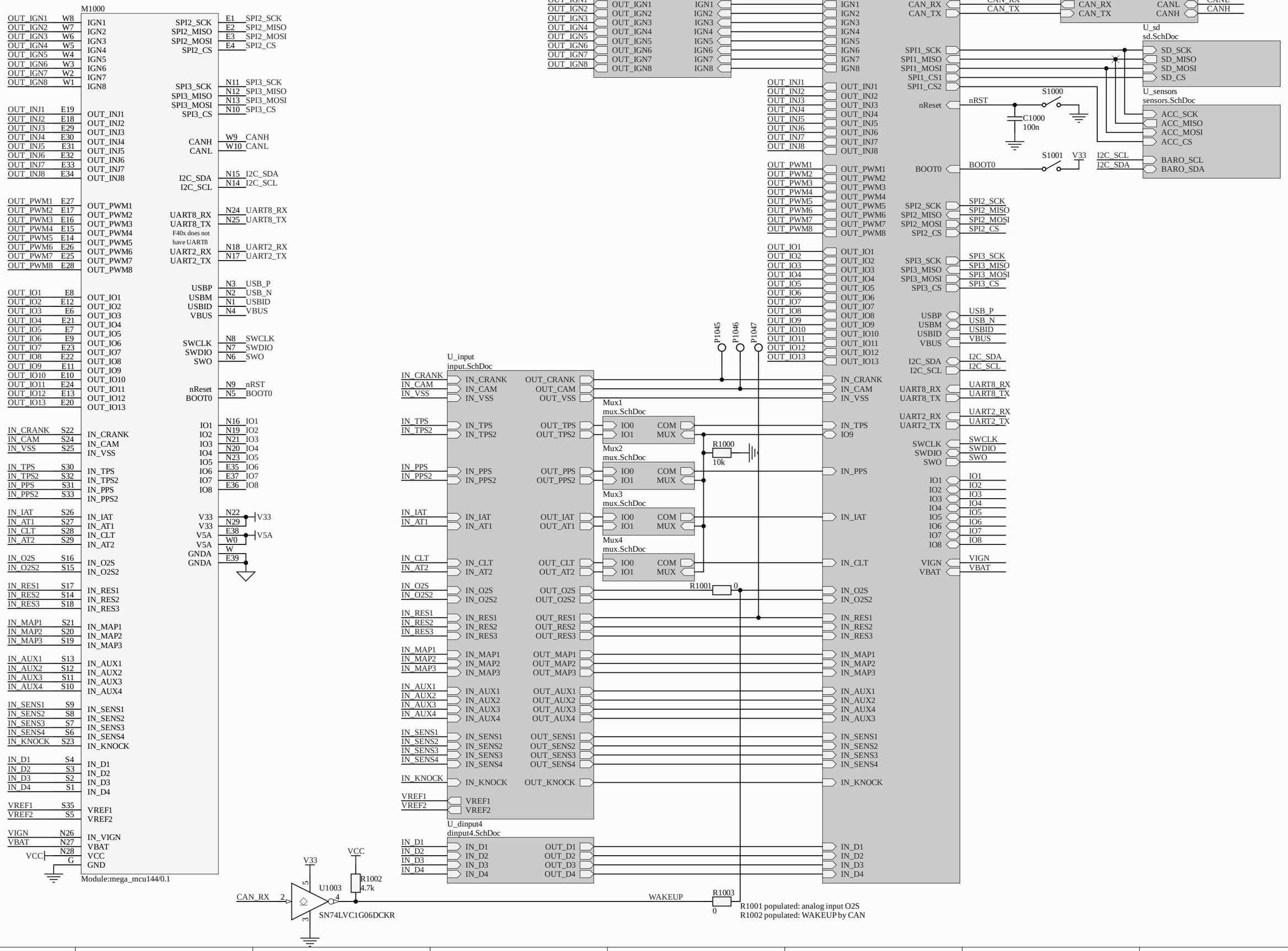
M1000
OUT_IGN1 W8
OUT_IGN2 W7
OUT_IGN3 W6
OUT_IGN4 W5
OUT_IGN5 W4
OUT_IGN6 W3
OUT_IGN7 W2
OUT_IGN8 W1
IGN1
IGN2
IGN3
IGN4
IGN5
IGN6
IGN7
IGN8
OUT_INJ1 E19
OUT_INJ2 E18
OUT_INJ3 E29
OUT_INJ4 E30
OUT_INJ5 E31
OUT_INJ6 E32
OUT_INJ7 E33
OUT_INJ8 E34
OUT_INJ1
OUT_INJ2
OUT_INJ3
OUT_INJ4
OUT_INJ5
OUT_INJ6
OUT_INJ7
OUT_INJ8
OUT_PWM1 E27
OUT_PWM2 E17
OUT_PWM3 E16
OUT_PWM4 E15
OUT_PWM5 E14
OUT_PWM6 E26
OUT_PWM7 E25
OUT_PWM8 E28
OUT_PWM1
OUT_PWM2
OUT_PWM3
OUT_PWM4
OUT_PWM5
OUT_PWM6
OUT_PWM7
OUT_PWM8
OUT_IO1 E8
OUT_IO2 E12
OUT_IO3 E6
OUT_IO4 E21
OUT_IO5 E7
OUT_IO6 E9
OUT_IO7 E23
OUT_IO8 E22
OUT_IO9 E11
OUT_IO10 E10
OUT_IO11 E24
OUT_IO12 E13
OUT_IO13 E20
OUT_IO1
OUT_IO2
OUT_IO3
OUT_IO4
OUT_IO5
OUT_IO6
OUT_IO7
OUT_IO8
OUT_IO9
OUT_IO10
OUT_IO11
OUT_IO12
OUT_IO13
IN_CRANK S22
IN_CAM S24
IN_VSS S25
IN_CRANK
IN_CAM
IN_VSS
IN_TPS S30
IN_TPS2 S32
IN_PPS S31
IN_PPS2 S33
IN_TPS
IN_TPS2
IN_PPS
IN_PPS2
IN_IAT S26
IN_AT1 S27
IN_CLT S28
IN_AT2 S29
IN_IAT
IN_AT1
IN_CLT
IN_AT2
IN_O2S S16
IN_O2S2 S15
IN_O2S
IN_O2S2
IN_RES1 S17
IN_RES2 S14
IN_RES3 S18
IN_RES1
IN_RES2
IN_RES3
IN_MAP1 S21
IN_MAP2 S20
IN_MAP3 S19
IN_MAP1
IN_MAP2
IN_MAP3
IN_AUX1 S13
IN_AUX2 S12
IN_AUX3 S11
IN_AUX4 S10
IN_AUX1
IN_AUX2
IN_AUX3
IN_AUX4
IN_SENS1 S9
IN_SENS2 S8
IN_SENS3 S7
IN_SENS4 S6
IN_KNOCK S23
IN_SENS1
IN_SENS2
IN_SENS3
IN_SENS4
IN_KNOCK
IN_D1 S4
IN_D2 S3
IN_D3 S2
IN_D4 S1
IN_D1
IN_D2
IN_D3
IN_D4
VREF1 S35
VREF2 S5
VREF1
VREF2
VIGN N26
VBAT N27
N28
VCC G
IN_VIGN
VBAT
VCC
GND
Module:mega_mcu144/0.1
SPI2_SCK E1 SPI2_SCK
SPI2_MISO E2 SPI2_MISO
SPI2_MOSI E3 SPI2_MOSI
SPI2_CS E4 SPI2_CS
SPI3_SCK N11 SPI3_SCK
SPI3_MISO N12 SPI3_MISO
SPI3_MOSI N13 SPI3_MOSI
SPI3_CS N10 SPI3_CS
CANH W9 CANH
CANL W10 CANL
I2C_SDA N15 I2C_SDA
I2C_SCL N14 I2C_SCL
UART8_RX N24 UART8_RX
UART8_TX N25 UART8_TX
F40x does not have UART8
UART2_RX N18 UART2_RX
UART2_TX N17 UART2_TX
USBP N3 USB_P
USBM N2 USB_N
USBID N1 USBID
VBUS N4 VBUS
SWCLK N8 SWCLK
SWDIO N7 SWDIO
SWO N6 SWO
nReset N9 nRST
BOOT0 N5 BOOT0
IO1 N16 IO1
IO2 N19 IO2
IO3 N21 IO3
IO4 N20 IO4
IO5 N23 IO5
IO6 E35 IO6
IO7 E37 IO7
IO8 E36 IO8
V33 N22 V33
V33 N29
V5A E38 V5A
V5A W0
W
GNDA E39
GNDA
U_ign8
ign8.SchDoc
OUT_IGN1 IGN1
OUT_IGN2 IGN2
OUT_IGN3 IGN3
OUT_IGN4 IGN4
OUT_IGN5 IGN5
OUT_IGN6 IGN6
OUT_IGN7 IGN7
OUT_IGN8 IGN8
U_mcu
mcu.SchDoc
IGN1
IGN2
IGN3
IGN4
IGN5
IGN6
IGN7
IGN8
OUT_INJ1
OUT_INJ2
OUT_INJ3
OUT_INJ4
OUT_INJ5
OUT_INJ6
OUT_INJ7
OUT_INJ8
OUT_PWM1
OUT_PWM2
OUT_PWM3
OUT_PWM4
OUT_PWM5
OUT_PWM6
OUT_PWM7
OUT_PWM8
OUT_IO1
OUT_IO2
OUT_IO3
OUT_IO4
OUT_IO5
OUT_IO6
OUT_IO7
OUT_IO8
OUT_IO9
OUT_IO10
OUT_IO11
OUT_IO12
OUT_IO13
IN_CRANK
IN_CAM
IN_VSS
IN_TPS
IO9
IN_PPS
IN_IAT
IN_CLT
IN_O2S
IN_O2S2
IN_RES1
IN_RES2
IN_RES3
IN_MAP1
IN_MAP2
IN_MAP3
IN_AUX1
IN_AUX2
IN_AUX4
IN_AUX3
IN_SENS1
IN_SENS2
IN_SENS3
IN_SENS4
IN_KNOCK
CAN_RX
CAN_TX
SPI1_SCK
SPI1_MISO
SPI1_MOSI
SPI1_CS1
SPI1_CS2
nReset
BOOT0
SPI2_SCK
SPI2_MISO
SPI2_MOSI
SPI2_CS
SPI3_SCK
SPI3_MISO
SPI3_MOSI
SPI3_CS
USBP
USBM
USBID
VBUS
I2C_SDA
I2C_SCL
UART8_RX
UART8_TX
UART2_RX
UART2_TX
SWCLK
SWDIO
SWO
IO1
IO2
IO3
IO4
IO5
IO6
IO7
IO8
VIGN
VBAT
U_can
can.SchDoc
CAN_RX
CAN_TX
CANL
CANH
U_sd
sd.SchDoc
SD_SCK
SD_MISO
SD_MOSI
SD_CS
U_sensors
sensors.SchDoc
ACC_SCK
ACC_MISO
ACC_MOSI
ACC_CS
BARO_SCL
BARO_SDA
S1000
C1000
100n
S1001
V33
I2C_SCL
I2C_SDA
P1045
P1046
P1047
U_input
input.SchDoc
IN_CRANK
IN_CAM
IN_VSS
OUT_CRANK
OUT_CAM
OUT_VSS
Mux1
mux.SchDoc
IN_TPS
IN_TPS2
OUT_TPS
OUT_TPS2
IO0
IO1
COM
MUX
R1000
10k
Mux2
mux.SchDoc
IN_PPS
IN_PPS2
OUT_PPS
OUT_PPS2
Mux3
mux.SchDoc
IN_IAT
IN_AT1
OUT_IAT
OUT_AT1
Mux4
mux.SchDoc
IN_CLT
IN_AT2
OUT_CLT
OUT_AT2
R1001
0
IN_O2S
IN_O2S2
OUT_O2S
OUT_O2S2
IN_RES1
IN_RES2
IN_RES3
OUT_RES1
OUT_RES2
OUT_RES3
IN_MAP1
IN_MAP2
IN_MAP3
OUT_MAP1
OUT_MAP2
OUT_MAP3
IN_AUX1
IN_AUX2
IN_AUX3
IN_AUX4
OUT_AUX1
OUT_AUX2
OUT_AUX3
OUT_AUX4
IN_SENS1
IN_SENS2
IN_SENS3
IN_SENS4
OUT_SENS1
OUT_SENS2
OUT_SENS3
OUT_SENS4
IN_KNOCK
OUT_KNOCK
VREF1
VREF2
U_dinput4
dinput4.SchDoc
IN_D1
IN_D2
IN_D3
IN_D4
OUT_D1
OUT_D2
OUT_D3
OUT_D4
V33
VCC
U1003
SN74LVC1G06DCKR
CAN_RX
R1002
4.7k
WAKEUP
R1003
0
R1001 populated: analog input O2S
R1002 populated: WAKEUP by CAN

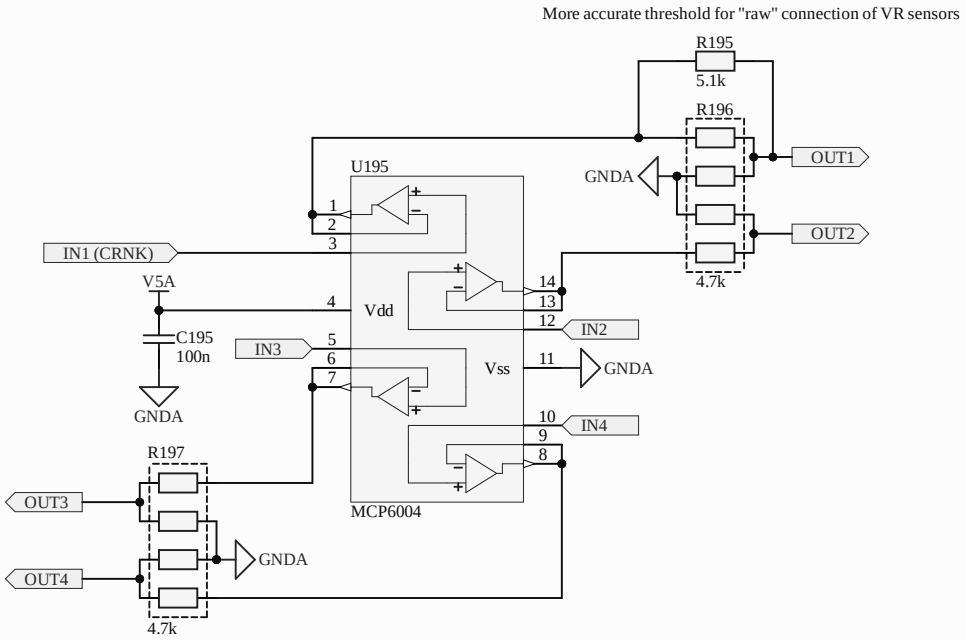
More accurate threshold for "raw" connection of VR sensors
R195
5.1k
R196
OUT1
GNDA
OUT2
4.7k
U195
1
2
3
IN1 (CRNK)
V5A
4
Vdd
14
13
12
IN2
C195
100n
IN3
5
6
7
Vss
11
GNDA
GNDA
10
IN4
9
8
R197
OUT3
MCP6004
GNDA
OUT4
4.7k

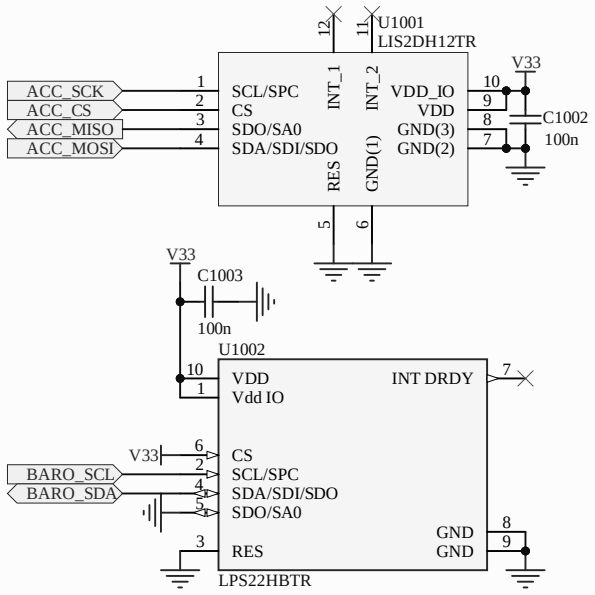
U1001
LIS2DH12TR
ACC_SCK
ACC_CS
ACC_MISO
ACC_MOSI
SCL/SPC
CS
SDO/SA0
SDA/SDI/SDO
INT_1
INT_2
RES
GND(1)
VDD_IO
VDD
GND(3)
GND(2)
V33
C1002
100n
C1003
100n
U1002
VDD
Vdd IO
INT DRDY
CS
SCL/SPC
SDA/SDI/SDO
SDO/SA0
RES
GND
GND
BARO_SCL
BARO_SDA
LPS22HBTR

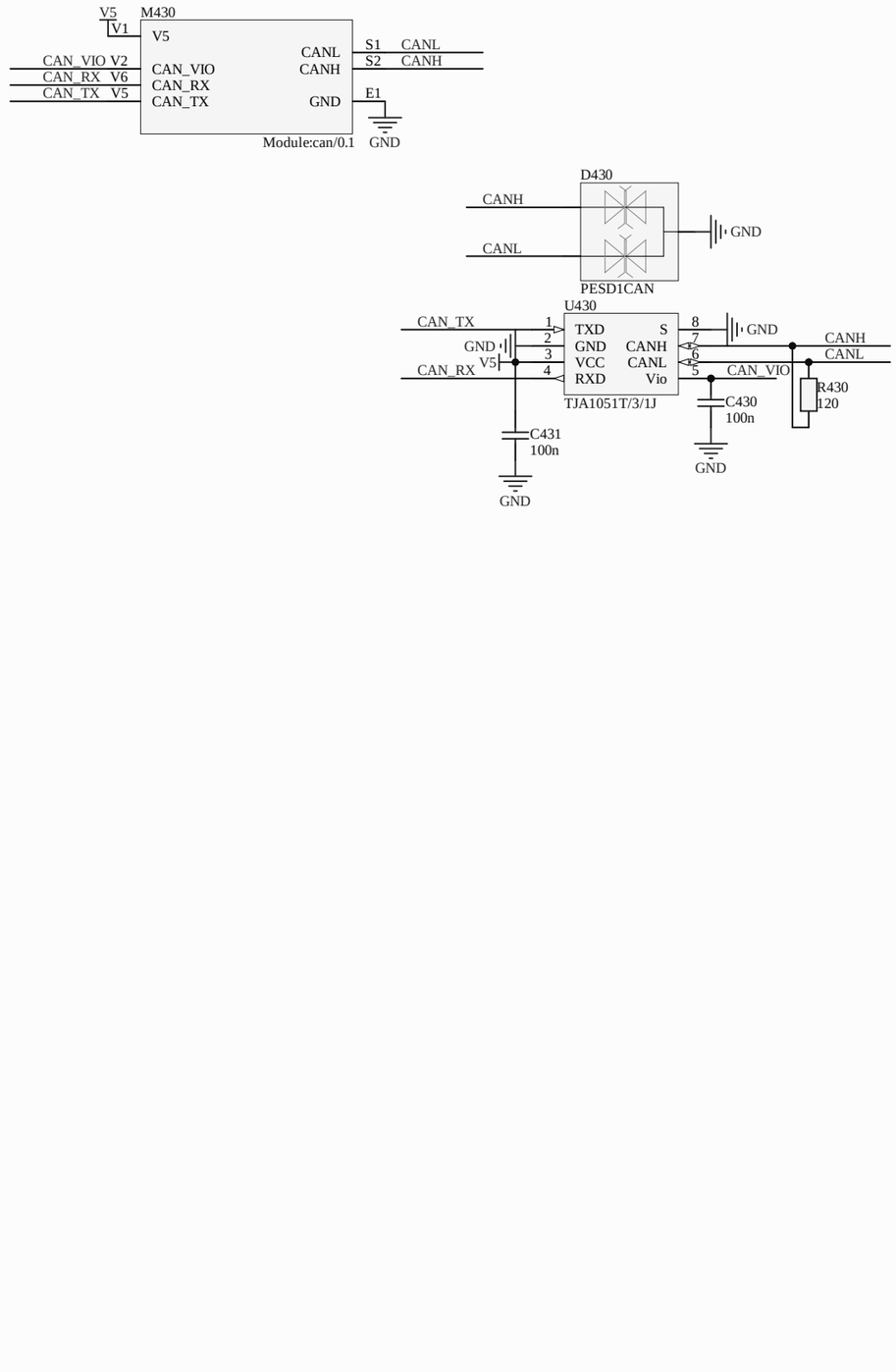

Title: ***Hellen-One CAN***			***rusEFI EMS*** ***Hellen-One Platform*** *https://rusefi.com/s/hellen72*
Size: A3	Author: andreika	Revision: 0.1	
Date: 02.03.2021		Sheet 1 of 1	