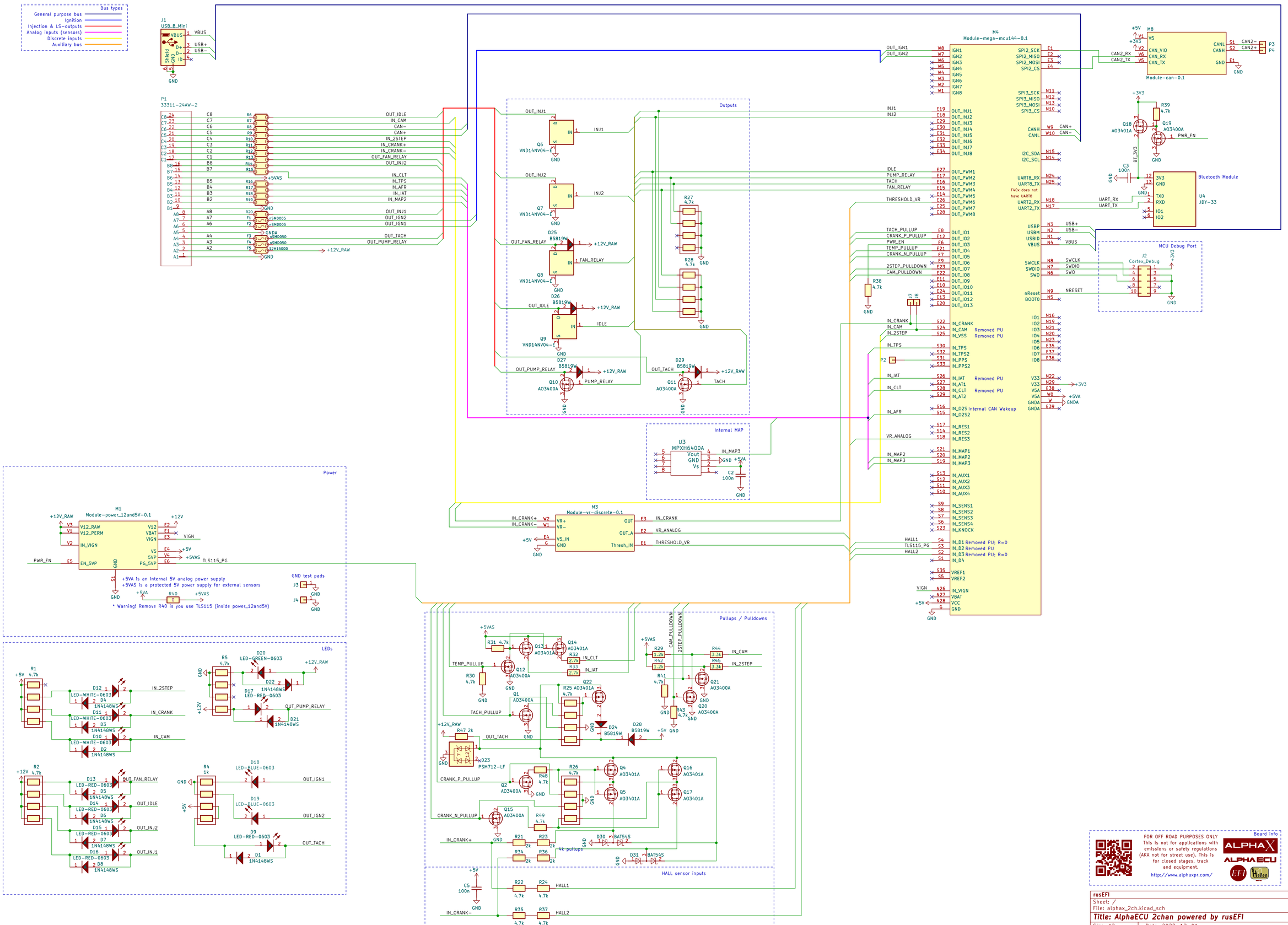

FOR OFF ROAD PURPOSES ONLY
This is not for applications with emissions or safety regulations (AKA not for street use). This is for closed stages, track and equipment.
http://www.alphaxpr.com/

Board info

rusEFI	
Sheet: /	
File: alphax_2ch.kicad_sch	
Title: AlphaECU 2chan powered by rusEFI	
Size: A2 / Date: 2022-12-01	Rev: E
KiCad E.D.A. kicad (6.0.9)	Id: 1/1