Bus types
General purpose bus
Ignition
Injection
Analog inputs (sensors)
Discrete inputs
LS & HS outputs
DC Motor

J4
43045-0812
OUT_IGN1 8
OUT_IGN2 7
OUT_IGN3 6
OUT_IGN4 5
4 OUT_TACH
3
2 +12V_PROT
1 GND

J5
43045-0612
+5VP
IN_CRANK 2
GNDA 1
3
6 IN_CAM
5 +5VP
4 GNDA

ETB Upgrade option
J2
43045-0612
+5VP
IN_PPS1 2
GNDA 1
3
6
5 IN_PPS2 +5VP
4 GNDA
J1
43045-0612
+5VP
IN_TPS1 2
ETB_P 1
3
6 GNDA
5 IN_TPS2
4 ETB_N

PROTO_AREA
+12V_PROT
+5VP
GND
PROTO_AREA

M1
Module:mega-uaefi/0.3

OUT_IGN1 N42 IGN1
OUT_IGN2 N33 IGN2
OUT_IGN3 N25 IGN3
OUT_IGN4 N17 IGN4
OUT_TACH N10 IGN5
HS_VTC N7 IGN6
Ignition logic level outputs by default to control dumb coils remove R870-R872, R876-R878 and populate Q841-Q846

OUT_INJ1 N11 OUT_INJ1
OUT_INJ2 N12 OUT_INJ2
OUT_INJ3 N13 OUT_INJ3
OUT_INJ4 N14 OUT_INJ4
OUT_EGR_SOLENOID N15 OUT_INJ5
OUT_IAB_SOLENOID N16 OUT_INJ6

OUT_MIL N34 OUT_LS1
OUT_IDLE N35 OUT_LS2 Idle Air Valve
OUT_AC_RELAY N36 OUT_LS3
OUT_FUEL_PUMP_RELAY N37 OUT_LS4 Fuel Pump Relay
Solenoid load capable

OUT_IGNITION_CONTROL_MODULE N9 OUT_LS5_HOT IGN7 Main Relay
OUT_FAN_CONTROL N8 OUT_LS6_HOT IGN8 Fan Relay
Always hot load capable

ETB_P N51 OUT_DC1+
ETB_N N52 OUT_DC1-

DC2+ N53 OUT_DC2+
N54 OUT_DC2-

+12V_PROT N3 OUT_12V_FUSED
WBO_HTR- N55 WBO_HTR-
WBO_Rtrim N58 WBO_Rtrim
WBO_Ip N57 WBO_Ip
WBO_Vm N56 WBO_Vm
WBO_Vs N59 WBO_Vs
E1a WBO_SWC
E1b WBO_SWD

CKP_24+ N48 VR_MAX9924+
CKP_24- N49 VR_MAX9924-
Install a 4.7 kOhm R843 resistor for using VR_MAX9924- as a hall sensor input

CYP_1+ N46 VR_DISCRETE+
CYP_1- N47 VR_DISCRETE-

IN_TPS1 N29 IN_TPS1
IN_TPS2 N23 IN_TPS2
IN_PPS1 N30 IN_PPS1
IN_PPS2 N22 IN_PPS2

IN_IAT N31 IN_IAT
IN_CLT N32 IN_CLT

IN_MAP N27 IN_MAP
Move the resistor from position R143 to R145 to enable the CAN WAKEUP function. The AUX1 analog input will be unavailable.
Fuel Pressure (mm100) / Digital (mm100-coated)

IN_EGR/AUX1 N26 IN_AUX1
IN_O2/AUX2 N24 IN_AUX2
IN_AC_PRESSURE_SW N21 IN_AUX3

EGT+ N5 IN_EGT+
J7 1 2 EGT- N6 IN_EGT-
43045-0212

IN_KNOCK N50 IN_KNOCK

IN_FLEX N28 IN_FLEX
IN_CAM N20 IN_HALL1
IN_VSS N19 IN_HALL2
IN_CRANK N18 IN_HALL3

IN_HS_START N38 IN_BUTTON1
IN_HS_BRAKE N39 IN_BUTTON2 A/C Request
IN_DIAG N40 IN_BUTTON3

W11 OUT_5V
W17 OUT_5V_SWITCHED
+5VP N43 OUT_5V_PROTECTED
E1 OUT_3V3
E2 OUT_3V3_SWITCHED
GNDA N41 GNDA

CANH N44 CANH
CANL N45 CANL

W16 CAN2H
W15 CAN2L mm100 only

W6 VBUS
W4 USB+
W5 USB-

12V_KEY N2 IN_12V_MAIN_RELAY
N1 IN_12V_KEY
N4 IN_CONSTANT_POWER
GND GND

W3 nReset internal
W1 BOOT0 buttons

W13 LED_GREEN
W12 LED_YELLOW
5V_PROTECTED_GOOD W14
E4 UART2_RX
E3 UART2_TX
W2 PWR_EN
P3 W8 DC1_DIR
P30 W9 DC1_PWM
P31 W10 DC2_DIR
P32 W7 DC2_PWM
W19 SPI2_CS
W18 SPI2_SCK

J6
178780-1_OBD1
A1 OUT_INJ1
A2 OUT_INJ4
A3 OUT_INJ2
A4 OUT_HS_VTC
A5 OUT_INJ3
A6
A7 P4 OEM O2 Heater UNUSED OUT_FUEL_PUMP_RELAY
A8 DNP R48
A9 R13 OUT_IDLE
A10
A11 P5 OEM Engine Mount Control UNUSED
A12 R14 OUT_EGR_SOLENOID
A13 R15 OUT_FAN_CONTROL
A14 R16 OUT_MIL
A15 P6 OEM Fuel Injection Air Control UNUSED
A16 R17 OUT_AC_RELAY
A17 R18 OUT_LS1
A18 R19 OUT_IAB_SOLENOID
A19 P7
A20 P8 OUT_LS2
A21 R20 OUT_IGNITION_CONTROL_MODULE
A22
A23 GND DNP R67
A24 GND
A25 12V_KEY
A26 R39 GND

B1
B2 PG= A25
B3 R44 GND
B4 P10
B5 P11 TCU UNUSED
B6 R22 IN_AC_PRESSURE_SW
B7 P12
B8 P13 AT Gear Pos Part UNUSED
B9 P14 Power Steering Pres Switch UNUSED (open drain)
B10 R23 IN_HS_START
B11 R24 IN_VSS
B12 cCYP_1+ R5 CYP_1+
B13 cCYP_1- R6 CYP_1-
B14 P15 TDC UNUSED
B15 P16
B16 cCKP_24+ R7 CKP_24+
cCKP_24- R8 CKP_24-

C1 +12V_PROT
C2 WBO_HTR-
C3 WBO_Vm
C4 WBO_Ip
C5 WBO_Rtrim
C6 WBO_Vs
C7 IN_FLEX
C8
C9 P17
C10 P18
C11 P19
C12 P20
P21

D1 P22 Constant +12v UNUSED
D2 R25 IN_HS_BRAKE
D3 R26 IN_KNOCK
D4 R27 IN_DIAG
D5
D6 P23 VTEC Pressure Switch UNUSED (+12 when something)
D7 P24
D8 P25 K-Line UNUSED
D9 P26
D10 P27
P28
D11 R28 IN_TPS1
D12 R29 IN_EGR/AUX1
D13 R30 IN_CLT
D14 R31 IN_O2/AUX2
D15 R32 IN_IAT
D16 P29
D17 R33 IN_MAP
D18 R34 +5VP TCM
D19 R35 +5VP MAP
D20 R36 +5VP TPS
D21 R37 GNDA
D22 R38 GNDA

J8
E10T-FT3-PPF
VBUS 1 VBUS
CC 8
TX+ 9 R842 5k1 GND
TX- 7
RX+ 3
RX- 5
D- 4 USB-
D+ 6 USB+
GND 10 GND

R2 DNP DC2+
OUT_HS_VTC R1
D1 SS34 GND
+12V_PROT
U1 BTS6143D
VBB 3
OUT 1
IN 2
IS 4
R3 1k GND
Q1 AO3400A
3 GND
1 HS_VTC
R4 1k GND

+12V_PROT
U2 VNLD5160TR-E
D2 B5819W 2 1
D3 B5819W 2 1
OUT_LS1 8 D1 7 S1 6 D2 5 S2
OUT_LS2
GND
IN1 1
STATUS1 2
IN2 3
STATUS2 4
R9 4.7k LS1 P1
R10 4.7k
R11 4.7k GND
LS2 P2
R12 4.7k GND

J3
43045-0612
CANH 3 2 1
6 CANL 5 4

M2
V5_IN W1
LSU_H- Power GND E6
LSU_H+ Heater negative E5
LSU_Rtrim E4
LSU_Ip E3
LSU_Vm Internal TC2030 connector E2
LSU_Un E1
GND Analog/digital G
VCC J1 1
SEL1
GND 2
PULL_DOWN1
VCC 3
PULL_UP2
GND 4
SEL2
PULL_DOWN2
CAN_VIO W2
CANL W3
CANH W4
V33_OUT W8
SWCLK W7
SWDIO W6
nReset W5
PULL_UP1
VDDA W9
Module-wbo-0.5

M7
OUT- S2
OUT+ S3
12V_IN N2
12V_IN S1
3V3_IN W5
GND G
DIS W1
PWM W2
DIR W4
12V_IN N1
MOSI W3
SCLK W7
-CS
MISO W6
Module-motor-driver-0.1

M8
OUT- S2
OUT+ S3
12V_IN N2
12V_IN S1
3V3_IN W5
GND G
DIS W1
PWM W2
DIR W4
12V_IN N1
MOSI W3
SCLK W7
-CS
MISO W6
Module-motor-driver-0.1

M5
VR+ W2
VR- W1
V5_IN E4
GND G
Install R770 for use with very hot VR signals, to dampen the signal
OUT E3
OUT_A E2
Thresh_IN E1
Module-vr-discrete-0.5

M6
VR+ W2
VR- W1
V5_IN E4
GND G
Install R775 for use with very hot VR signals, to dampen the signal
OUT E3
NC E2
NC E1
Module-vr-max9924-0.1

M4
VREF W2
V5A E1
IN_KNOCK W1
OUT_KNOCK E3
GND E2
Module-knock-0.2

M3
Module-power_12and5V-0.3
V12_RAW V3
V12_PERM V1
IN_VIGN V2
EN_5VP E5
GND
V12 E2
VBAT E1
VIGN E3
V5 E4
5VP V4
PG_5VP E6
S1

M9
Module:mega-mcu100-coated/0.3
IGN1_(PC13) W10
IGN2_(PE5) W9
IGN3_(PE4) W8
IGN4_(PE3) W7
IGN5_(PE2) W6
IGN6_(PB8) W5
IGN7_(PB9) W4
IGN8_(PE6) W3
NAND flash and accelerometer on SPI1 bus
SPI2_SCK_(PD3) E7
SPI2_MISO_(PB14) E8
SPI2_MOSI_(PB15) E9
SPI2_CS_(PB12) E6
SPI3_SCK_(PC10) N10
SPI3_MISO_(PC11) N11
SPI3_MOSI_(PC12) N12
SPI3_CS_(PA15) N9
OUT_INJ1_(PD0) E17
OUT_INJ2_(PA9) E16
OUT_INJ3_(PD11) E15
OUT_INJ4_(PD10) E14
OUT_INJ5_(PD2) E13
OUT_INJ6_(PA8) E12
OUT_INJ7_(PD15) E11
OUT_INJ8_(PD12) E10
CANH W11
CANL W12
I2C_SDA_(PB11) E4
I2C_SCL_(PB10) E3
F4Ox does not have UART8
UART8_RX_(PE0) N18
UART8_TX_(PE1) N19
OUT_PWM1_(PD13) E18
OUT_PWM2_(PC6) E19
OUT_PWM3_(PC7) E20
OUT_PWM4_(PC8) E21
OUT_PWM5_(PC9) E22
OUT_PWM6_(PD14) E23
UART2_RX_(PD6) N14
UART2_TX_(PD5) N13
IN_CRANK_(PB1) S14
IN_CAM_(PA6) S16
IN_VSS_(PE11) S17
IN_TPS_(PA4) S18
IN_PPS_(PA3) S19
IN_IAT_(PC3) S20
IN_CLT_(PC2) S21
USBP_(PA12) N3
USBM_(PA11) N2
USBID_(PA10) N4
VBUS N1
IN_O2S_/_CAN_WAKEUP_(PA0) S11
IN_O2S2_(PA1) S10
NC N7
BOOT0 N16
IN_MAP1_(PC0) S13
IN_MAP2_(PC1) S12
SWCLK_(PA14) N6
SWDIO_(PA13) N5
SWO_(PB3) N8
LED_GREEN N14a
LED_YELLOW N14b
IN_AUX1_(PB0) S9
IN_AUX2_(PC4/PE9) S8
IN_AUX3_(PD1) Digital only S7
IN_AUX4_(PC5) S6
IN_KNOCK_(PA2) S15
IN_D1_(PE12) S4
IN_D2_(PE13) S3
IN_D3_(PE14) S2
IN_D4_(PE15) S1
OUT_PWR_EN_(PE10) N20
IN_VIGN_(PA5) E5
VBAT N17
VCC N22
GND G
V33_SWITCHABLE N15
Connected V33 N21
Connected V33 N23
V5A_SWITCHABLE E1
Connected V5A_SWITCHABLE W2
V5A_SWITCHABLE W14
Connected GNDA W1
GNDA E2
VREF1 S22
VREF2 S5
V33_REF W13

M10
Module-can-0.1
V5 V1
CAN_VIO V2
CAN_RX V6
CAN_TX V5
CANL S1
CANH S2
GND E1

rusEFI
Sheet: /
File: uaefi-Honda-OBD1.kicad_sch
Title: uaefiOBD1honda
Size: A2 | Date: 2025-04-12 | Rev: d
KiCad E.D.A. 8.0.9 | Id: 1/1

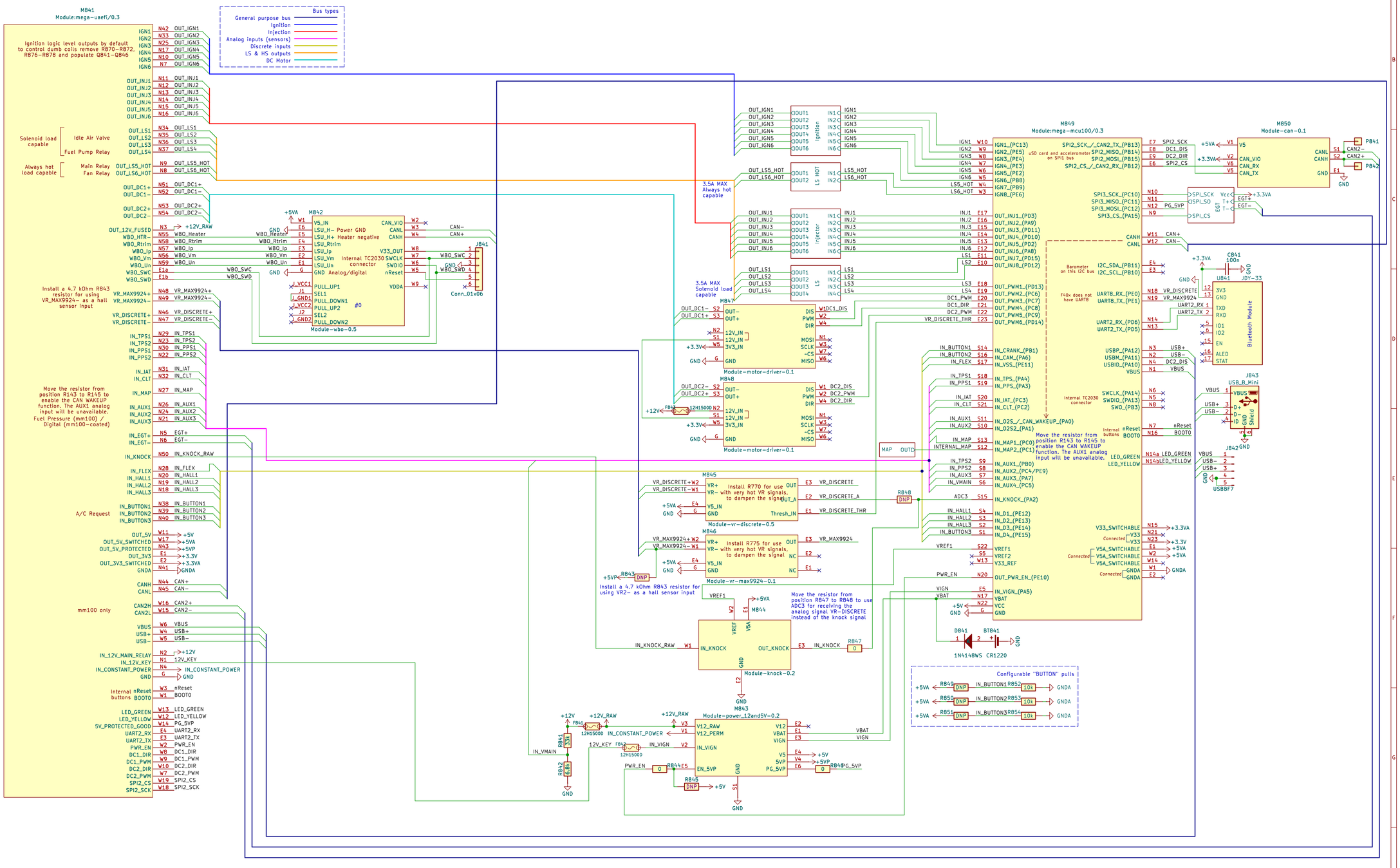
M841
Module:mega-uaefi/0.3
Bus types
General purpose bus
Ignition
Injection
Analog inputs (sensors)
Discrete inputs
LS & HS outputs
DC Motor
Ignition logic level outputs by default to control dumb coils remove R870-R872, R876-R878 and populate QB41-QB46
Solenoid load capable
Idle Air Valve
Fuel Pump Relay
Always hot load capable
Main Relay
Fan Relay
Install a 4.7 kOhm R843 resistor for using VR_MAX9924- as a hall sensor input
Move the resistor from position R143 to R145 to enable the CAN WAKEUP function. The AUX1 analog input will be unavailable. Fuel Pressure (mm100) / Digital (mm100-coated)
A/C Request
mm100 only
Internal nReset buttons BOOTO
M842
Module-wbo-0.5
Internal TC2030 connector
M847
Module-motor-driver-0.1
M848
Module-motor-driver-0.1
M845
Module-vr-discrete-0.5
M846
Module-vr-max9924-0.1
3.5A MAX Always hot capable
3.5A MAX Solenoid load capable
M844
Module-knock-0.2
M843
Module-power_12and5V-0.2
Install R770 for use with very hot VR signals, to dampen the signal
Install R775 for use with very hot VR signals, to dampen the signal
Install a 4.7 kOhm R843 resistor for using VR2- as a hall sensor input
Move the resistor from position R847 to R848 to use ADC3 for receiving the analog signal VR-DISCRETE instead of the knock signal
M849
Module:mega-mcu100/0.3
uSD card and accelerometer on SPI1 bus
Barometer on this I2C bus
F40x does not have UART8
Internal TC2030 connector
Internal nReset buttons
Move the resistor from position R143 to R145 to enable the CAN WAKEUP function. The AUX1 analog input will be unavailable.
M850
Module-can-0.1
Bluetooth Module
1N4148WS CR1220
Configurable "BUTTON" pulls
rusEFI.com
Sheet: /
File: mega-uaefi.kicad_sch
Title: mega-uaefi
Size: A2
Date: 2024-08-15
Rev: 0.3
KiCad E.D.A. 8.0.4
Id: 1/7

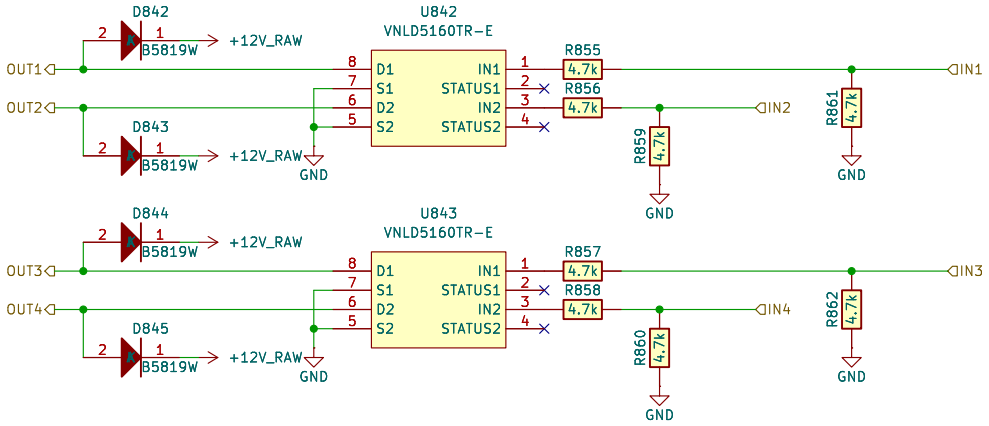

rusEFI.com

Sheet: /LS/
File: LS4.kicad_sch

Title: mega-uaefi

Size: A4	Date: 2024-08-15	**Rev: 0.3**
KiCad E.D.A. 8.0.4		Id: 3/7

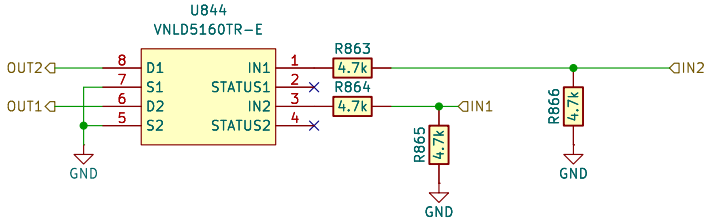

rusEFI.com

Sheet: /LS HOT/
File: LS_HOT.kicad_sch

Title: mega-uaefi

Size: A4	Date: 2024-08-15	**Rev: 0.3**
KiCad E.D.A. 8.0.4		Id: 6/7

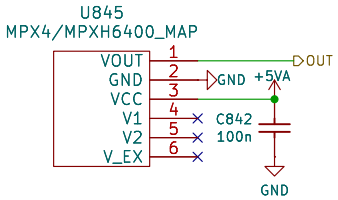

rusEFI.com

Sheet: /MAP/
File: MAP.kicad_sch

Title: mega-uaefi

Size: A4	Date: 2024-08-15	**Rev: 0.3**
KiCad E.D.A. 8.0.4		Id: 8/7

Remove R870–R872, R876–R878, and install Q841–Q846 for use with dumb coils

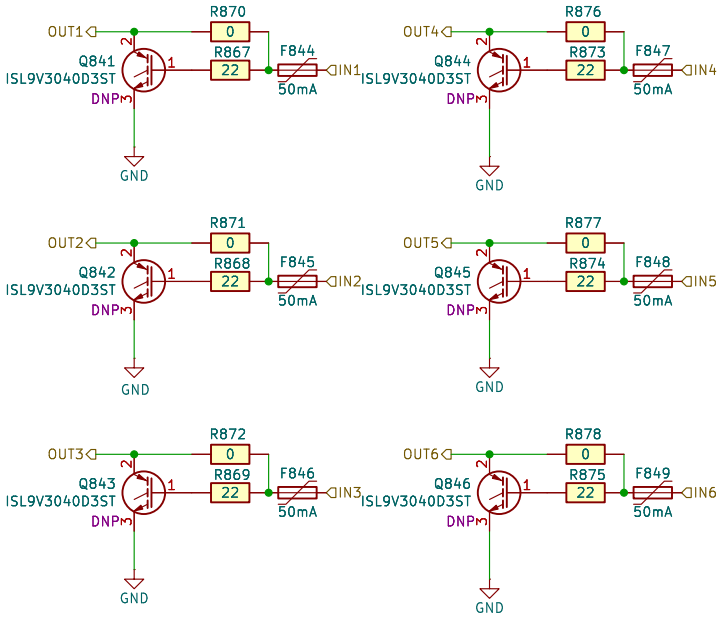

rusEFI.com

Sheet: /Ignition/
File: IGN6.kicad_sch

Title: mega-uaefi

Size: A4	Date: 2024-08-15	**Rev: 0.3**
KiCad E.D.A. 8.0.4		Id: 9/7

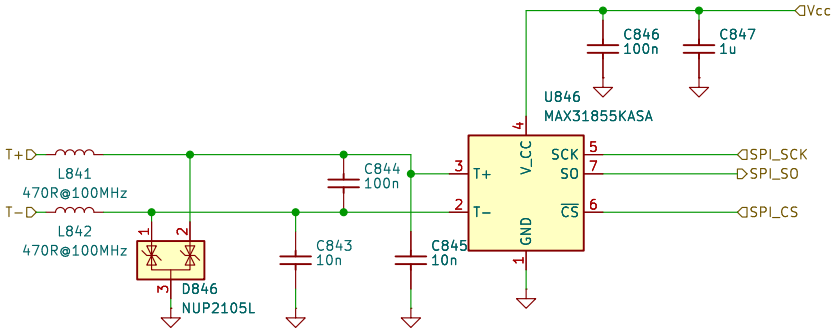

rusEFI.com

Sheet: /EGT/

File: egt.kicad_sch

Title: mega-uaefi

Size: A4	Date: 2024-08-15	**Rev: 0.3**
KiCad E.D.A. 8.0.4		Id: 9/7

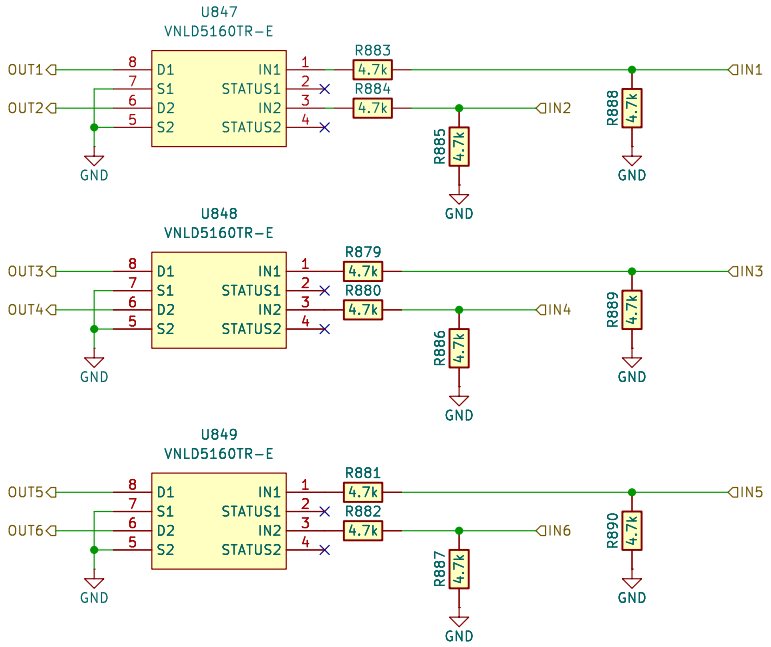

rusEFI.com		
Sheet: /Injector/ File: INJ6.kicad_sch		
Title: mega-uaefi		
Size: A4	Date: 2024-08-15	**Rev: 0.3**
KiCad E.D.A. 8.0.4		Id: 10/7

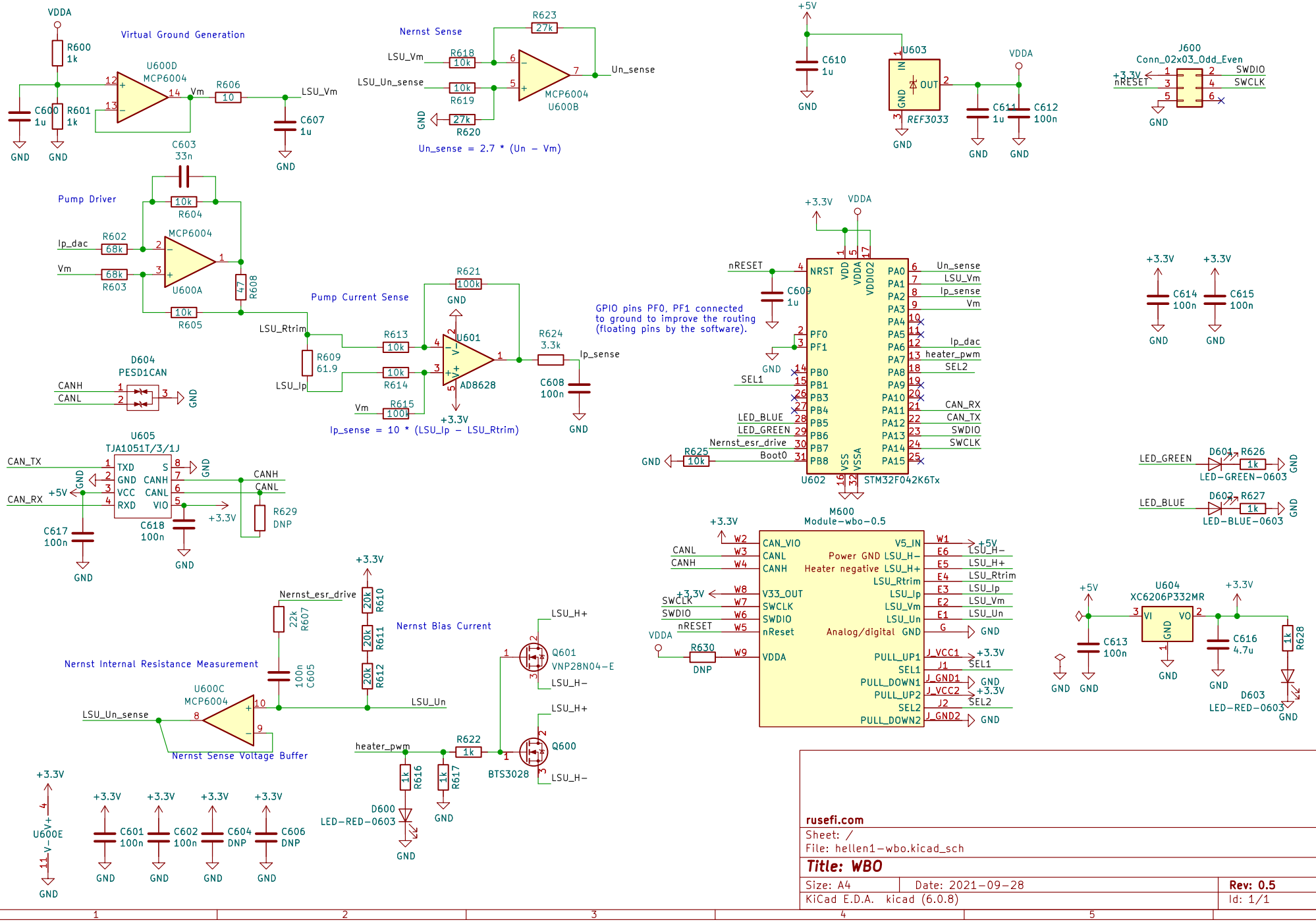
Virtual Ground Generation
U600D
MCP6004
R600 1k
R601 1k
C600 1u
C607 1u
R606 10
Vm
LSU_Vm
Nernst Sense
R623 27k
R618 10k
R619 10k
R620 27k
LSU_Vm
LSU_Un_sense
Un_sense
U600B
Un_sense = 2.7 * (Un − Vm)
+5V
C610 1u
U603
REF3033
C611 1u
C612 100n
VDDA
J600
Conn_02x03_Odd_Even
SWDIO
SWCLK
nRESET
Pump Driver
C603 33n
R604 10k
R605 10k
R602 68k
R603 68k
R608 47
Ip_dac
Vm
U600A
Pump Current Sense
R621 100k
R613 10k
R614 10k
R615 100
R609 61.9
R624 3.3k
C608 100n
U601
AD8628
LSU_Rtrim
LSU_Ip
Ip_sense
Ip_sense = 10 * (LSU_Ip − LSU_Rtrim)
D604
PESD1CAN
CANH
CANL
GPIO pins PF0, PF1 connected
to ground to improve the routing
(floating pins by the software).
nRESET
C609 1u
SEL1
LED_BLUE
LED_GREEN
Nernst_esr_drive
R625 10k
Boot0
U602
STM32F042K6Tx
C614 100n
C615 100n
U605
TJA1051T/3/1J
CAN_TX
CAN_RX
C617 100n
C618 100n
R629 DNP
LED_GREEN
LED_BLUE
D601
D602
R626 1k
R627 1k
LED−GREEN−0603
LED−BLUE−0603
M600
Module−wbo−0.5
Power GND LSU_H−
Heater negative LSU_H+
Analog/digital GND
R630 DNP
U604
XC6206P332MR
C613 100n
C616 4.7u
R628 1k
D603
LED−RED−0603
Nernst Internal Resistance Measurement
Nernst Bias Current
R607 22k
R610 20k
R611 20k
R612 20k
C605 100n
U600C
MCP6004
LSU_Un_sense
Nernst Sense Voltage Buffer
LSU_Un
Q601
VNP28N04−E
Q600
BTS3028
heater_pwm
R622 1k
R616 1k
R617 1k
D600
LED−RED−0603
U600E
C601 100n
C602 100n
C604 DNP
C606 DNP
rusefi.com
Sheet: /
File: hellen1−wbo.kicad_sch
Title: WBO
Size: A4
Date: 2021−09−28
Rev: 0.5
KiCad E.D.A. kicad (6.0.8)
Id: 1/1

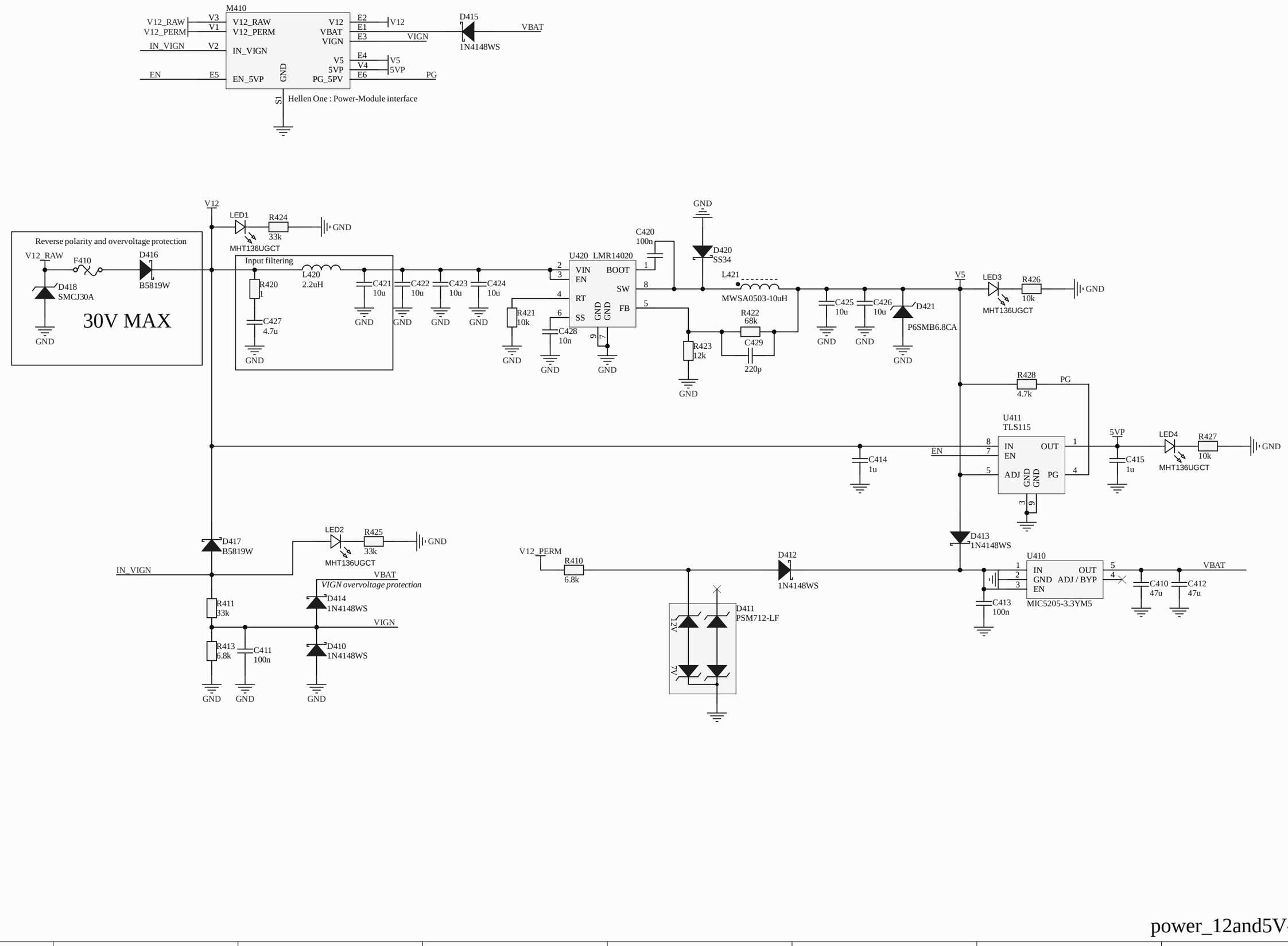

power_12and5V-0.3

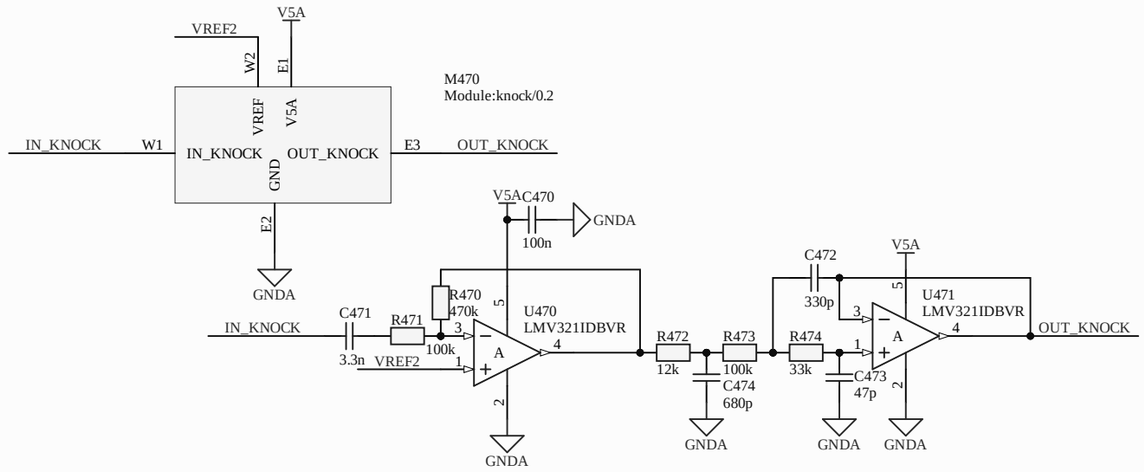

Title: ***Hellen-One Knock***			***rusEFI EMS*** ***Hellen-One Platform*** *https://rusefi.com/s/hellen72*
Size: A3	Author: andreika	Revision: 0.2	
Date: 15.02.2023		Sheet 1 of 1	

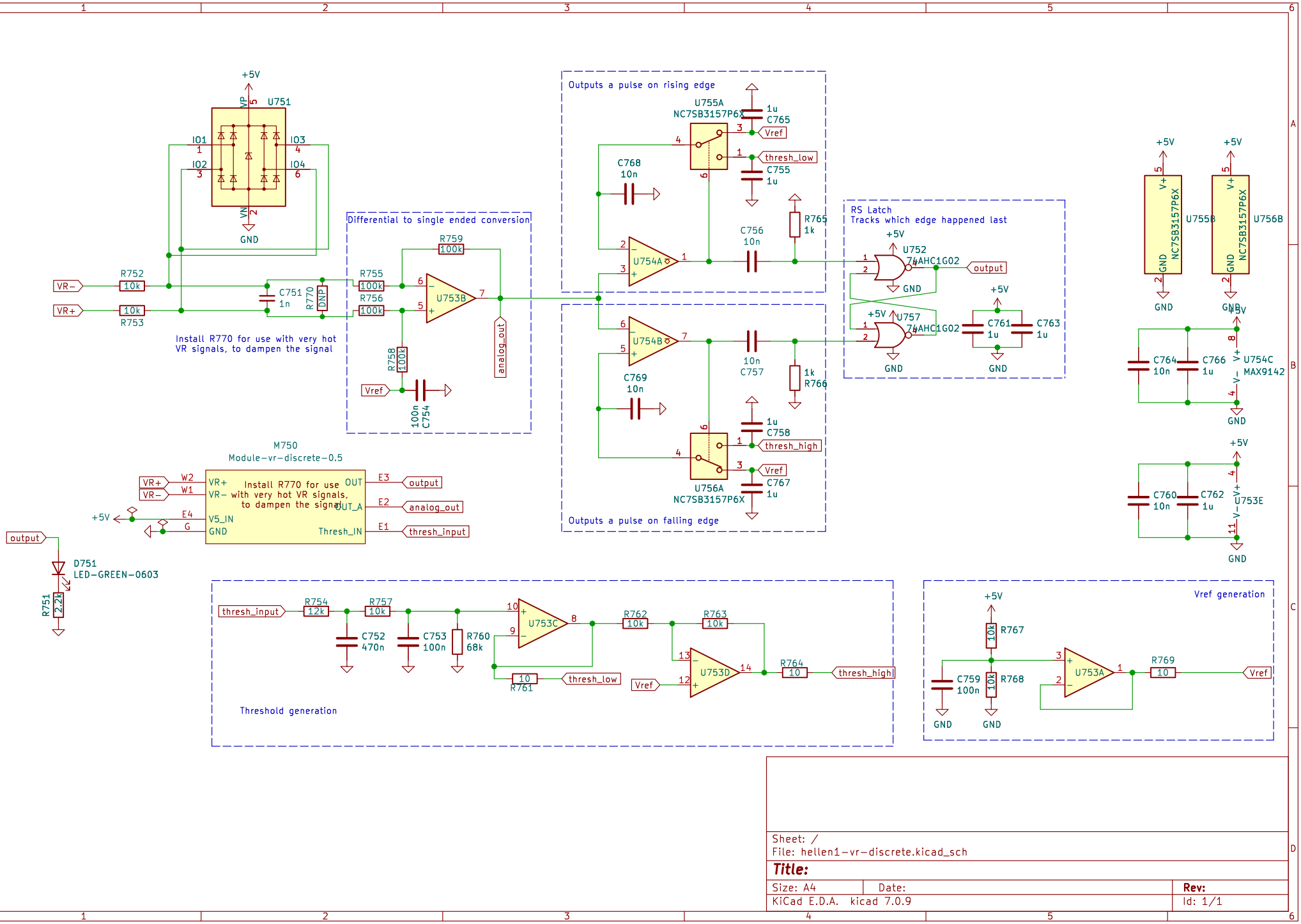
+5V
U751
VP
IO1
IO2
IO3
IO4
VN
GND
VR−
VR+
R752
10k
R753
10k
C751
1n
R770
DNP
Install R770 for use with very hot VR signals, to dampen the signal
Differential to single ended conversion
R759
100k
R755
100k
R756
100k
U753B
R758
100k
Vref
100n
C754
analog_out
Outputs a pulse on rising edge
U755A
NC7SB3157P6X
1u
C765
Vref
thresh_low
C755
1u
C768
10n
U754A
C756
10n
R765
1k
Outputs a pulse on falling edge
U754B
C769
10n
10n
C757
1k
R766
U756A
NC7SB3157P6X
1u
C758
thresh_high
Vref
C767
1u
RS Latch
Tracks which edge happened last
U752
74AHC1G02
output
U757
74AHC1G02
C761
1u
C763
1u
GND
U755B
NC7SB3157P6X
U756B
NC7SB3157P6X
U754C
MAX9142
C764
10n
C766
1u
U753E
C760
10n
C762
1u
M750
Module−vr−discrete−0.5
VR+
VR−
W2
W1
VR+
VR−
Install R770 for use with very hot VR signals, to dampen the signal
V5_IN
GND
OUT
OUT_A
Thresh_IN
E3
E2
E1
E4
G
output
analog_out
thresh_input
output
D751
LED−GREEN−0603
R751
2.2k
Threshold generation
thresh_input
R754
12k
R757
10k
C752
470n
C753
100n
R760
68k
U753C
R762
10k
R763
10k
U753D
R764
10
thresh_high
10
R761
thresh_low
Vref
Vref generation
R767
10k
C759
100n
R768
10k
U753A
R769
10
Vref
Sheet: /
File: hellen1−vr−discrete.kicad_sch
Title:
Size: A4
Date:
Rev:
KiCad E.D.A. kicad 7.0.9
Id: 1/1

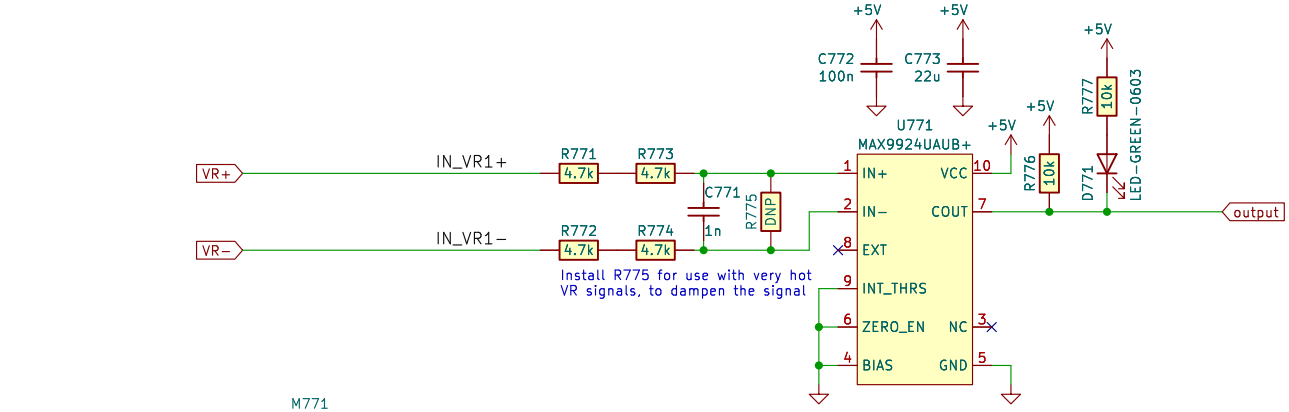

Sheet: /
File: hellen1−vr−max9924.kicad_sch

Title: VR MAX9924 module

Size: A4	Date: 2023−07−25	**Rev: 0.1**
KiCad E.D.A. eeschema 7.0.9		Id: 1/1

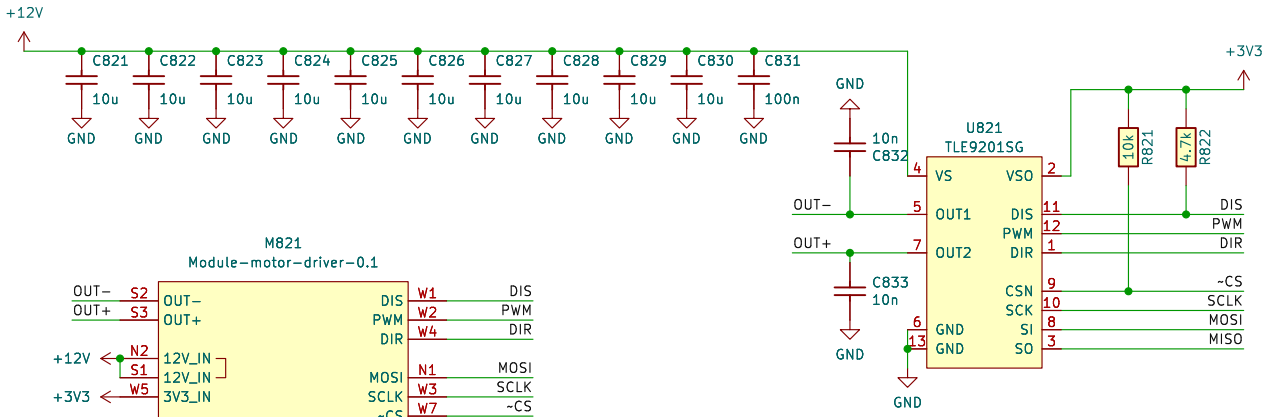

Sheet: /
File: hellen1−motor−driver.kicad_sch

Title: Motor−driver module

Size: A4	Date: 2024−03−07	**Rev: 0.1**
KiCad E.D.A. 8.0.3		Id: 1/1

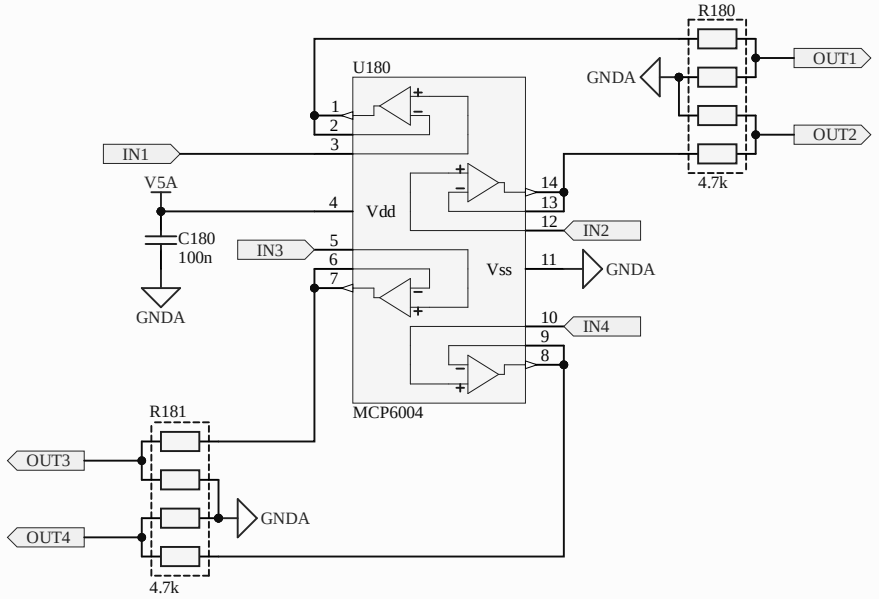
R180
U180
GNDA
OUT1
OUT2
IN1
V5A
Vdd
4.7k
C180
100n
IN3
IN2
Vss
GNDA
GNDA
IN4
MCP6004
R181
OUT3
GNDA
OUT4
4.7k

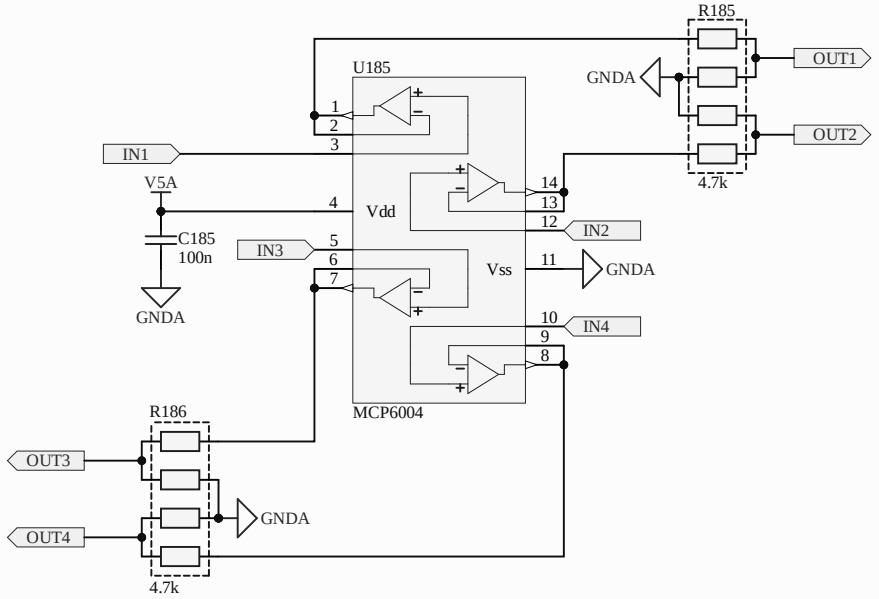
R185
U185
GNDA
OUT1
OUT2
IN1
V5A
4
Vdd
14
13
12
IN2
C185
100n
IN3
5
6
7
Vss
11
GNDA
GNDA
10
IN4
9
8
MCP6004
R186
OUT3
OUT4
GNDA
4.7k
4.7k

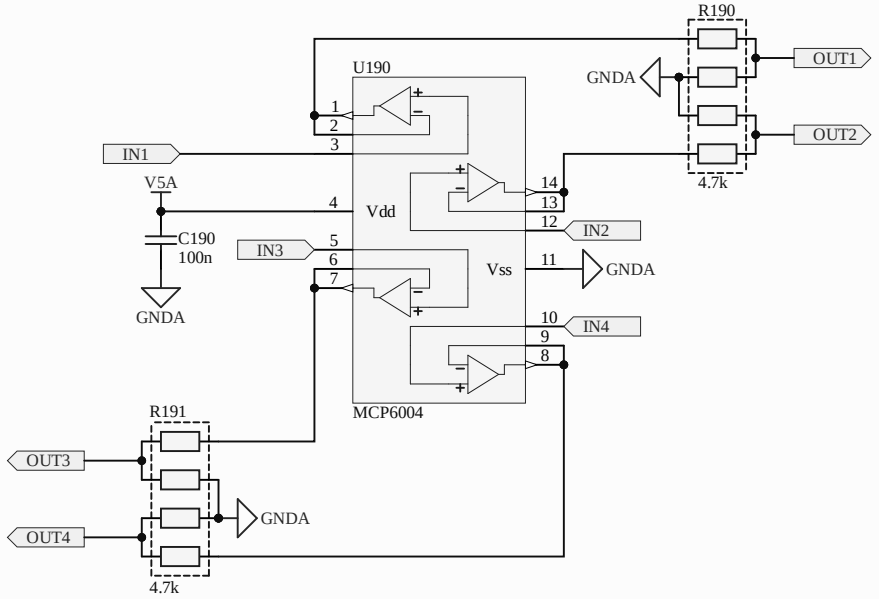
R190
U190
GNDA
OUT1
OUT2
IN1
V5A
Vdd
4.7k
C190
100n
IN3
IN2
Vss
GNDA
GNDA
IN4
MCP6004
R191
OUT3
GNDA
OUT4
4.7k

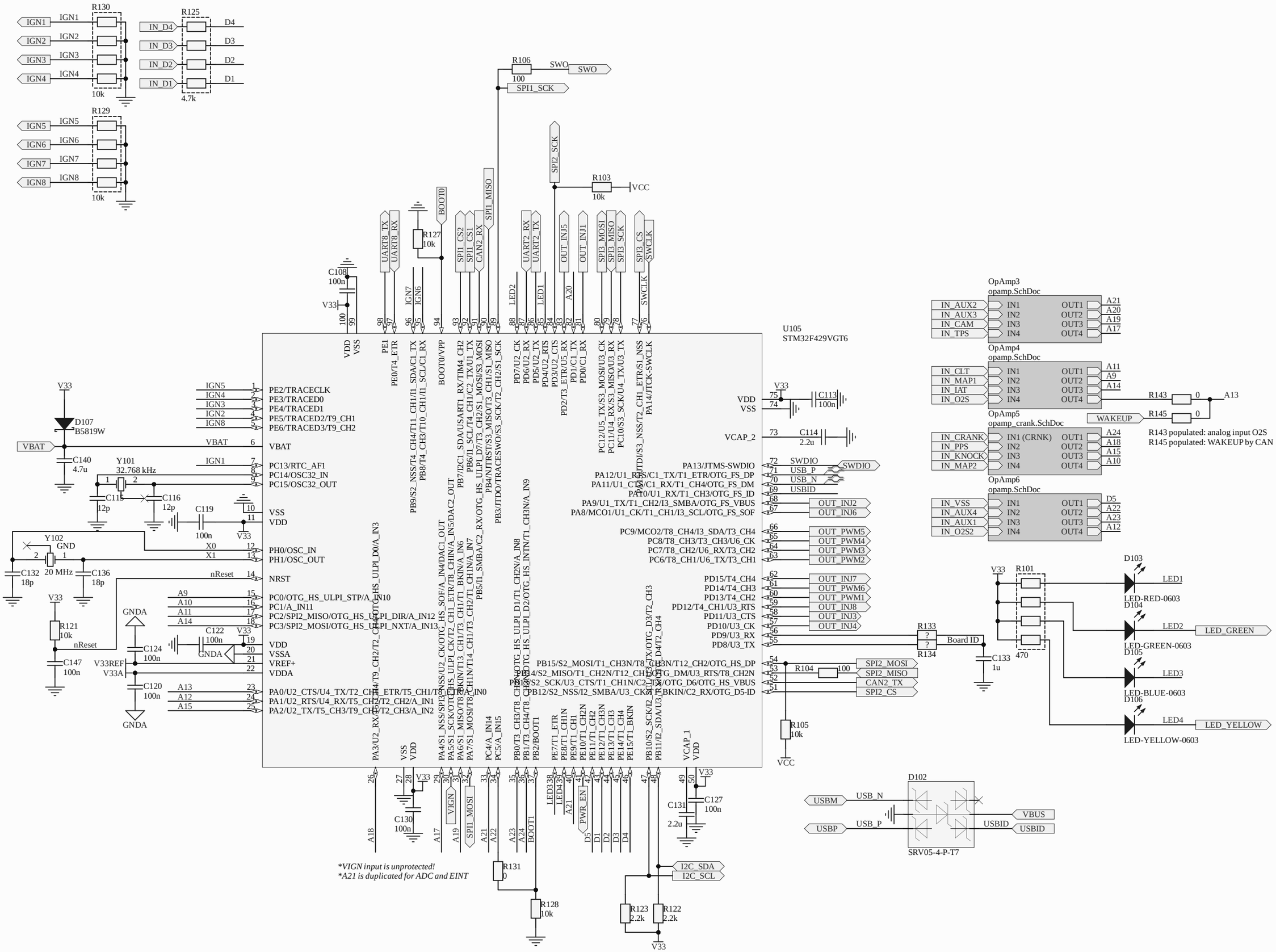
R130
IGN1
IGN2
IGN3
IGN4
10k
R125
IN_D4
IN_D3
IN_D2
IN_D1
D4
D3
D2
D1
4.7k
R129
IGN5
IGN6
IGN7
IGN8
10k
R106
SWO
100
SPI1_SCK
SPI2_SCK
R103
VCC
10k
R127
10k
BOOT0
C108
100n
V33
UART8_TX
UART8_RX
IGN7
IGN6
SPI1_CS2
SPI1_CS1
CAN2_RX
SPI1_MISO
LED2
UART2_RX
UART2_TX
LED1
OUT_INJ5
A20
OUT_INJ1
SPI3_MOSI
SPI3_MISO
SPI3_SCK
SPI3_CS
SWCLK
U105
STM32F429VGT6
VDD
VSS
PE1
PE0/T4_ETR
BOOT0/VPP
PD7/U2_CK
PD6/U2_RX
PD5/U2_TX
PD4/U2_RTS
PD3/U2_CTS
PD2/T3_ETR/U5_RX
PD1/C1_TX
PD0/C1_RX
PC12/U5_TX/S3_MOSI/U3_CK
PC11/U4_RX/S3_MISO/U3_RX
PC10/S3_SCK/U4_TX/U3_TX
PA14/JTCK-SWCLK
PA13/JTMS-SWDIO
PA12/U1_RTS/C1_TX/T1_ETR/OTG_FS_DP
PA11/U1_CTS/C1_RX/T1_CH4/OTG_FS_DM
PA10/U1_RX/T1_CH3/OTG_FS_ID
PA9/U1_TX/T1_CH2/I3_SMBA/OTG_FS_VBUS
PA8/MCO1/U1_CK/T1_CH1/I3_SCL/OTG_FS_SOF
PC9/MCO2/T8_CH4/I3_SDA/T3_CH4
PC8/T8_CH3/T3_CH3/U6_CK
PC7/T8_CH2/U6_RX/T3_CH2
PC6/T8_CH1/U6_TX/T3_CH1
PD15/T4_CH4
PD14/T4_CH3
PD13/T4_CH2
PD12/T4_CH1/U3_RTS
PD11/U3_CTS
PD10/U3_CK
PD9/U3_RX
PD8/U3_TX
PB15/S2_MOSI/T1_CH3N/T8_CH3N/T12_CH2/OTG_HS_DP
PB14/S2_MISO/T1_CH2N/T12_CH1/OTG_HS_DM/U3_RTS/T8_CH2N
PB13/S2_SCK/U3_CTS/T1_CH1N/C2_TX/OTG_D6/OTG_HS_VBUS
PB12/S2_NSS/I2_SMBA/U3_CK/T1_BKIN/C2_RX/OTG_D5-ID
PB11/I2_SDA/U3_RX/OTG_D4/T2_CH4
PB10/S2_SCK/I2_SCL/U3_TX/OTG_D3/T2_CH3
PB9/S2_NSS/T4_CH4/T11_CH1/I1_SDA/C1_TX
PB8/T4_CH3/T10_CH1/I1_SCL/C1_RX
PB7/I2C1_SDA/USART1_RX/TIM4_CH2
PB6/I1_SCL/T4_CH2/S1_MOSI/S3_MOSI
PB5/I1_SMBA/C2_RX/OTG_HS_ULPI_D7/T3_CH2/S1_MOSI/T3_CH1/I1_SCK
PB4/NJTRST/S3_MISO/T3_CH1N/T14_CH1/S1_MISO
PB3/JTDO/TRACESWO/S3_SCK/T2_CH2/S1_SCK
PA15/JTDI/S3_NSS/T2_CH1_ETR/S1_NSS
PC5/A_IN15
PC4/A_IN14
PB2/BOOT1
PB1/T3_CH4/T8_CH3N/OTG_HS_ULPI_D2/OTG_HS_INTN/T1_CH3N/A_IN9
PB0/T3_CH3/T8_CH2N/OTG_HS_ULPI_D1/T1_CH2N/A_IN8
PE15/T1_BKIN
PE14/T1_CH4
PE13/T1_CH3
PE12/T1_CH3N
PE11/T1_CH2
PE10/T1_CH2N
PE9/T1_CH1
PE8/T1_CH1N
PE7/T1_ETR
VCAP_1
VDD
VSS
PA4/S1_NSS/SPI3_NSS/U2_CK/OTG_HS_SOF/A_IN4/DAC1_OUT
PA5/S1_SCK/OTG_HS_ULPI_CK/T2_CH1_ETR/T8_CHIN/A_IN5/DAC2_OUT
PA6/S1_MISO/T8_BKIN/T13_CH1/T3_CH1/T1_BKIN/A_IN6
PA7/S1_MOSI/T8_CH1N/T14_CH1/T3_CH2/T1_CH1N/A_IN7
PA3/U2_RX/T5_CH4/T9_CH2/T2_CH4/OTG_HS_ULPI_D0/A_IN3
PA2/U2_TX/T5_CH3/T9_CH1/T2_CH3/A_IN2
PA1/U2_RTS/U4_RX/T5_CH2/T2_CH2/A_IN1
PA0/U2_CTS/U4_TX/T2_CH1_ETR/T5_CH1/I8_NSS/A_IN0
PC3/SPI2_MOSI/OTG_HS_ULPI_NXT/A_IN13
PC2/SPI2_MISO/OTG_HS_ULPI_DIR/A_IN12
PC1/A_IN11
PC0/OTG_HS_ULPI_STP/A_IN10
PH1/OSC_OUT
PH0/OSC_IN
NRST
VBAT
PC13/RTC_AF1
PC14/OSC32_IN
PC15/OSC32_OUT
PE2/TRACECLK
PE3/TRACED0
PE4/TRACED1
PE5/TRACED2/T9_CH1
PE6/TRACED3/T9_CH2
IGN5
IGN4
IGN3
IGN2
IGN8
IGN1
X0
X1
nReset
A9
A10
A11
A14
A13
A12
A15
VDD
VSSA
VREF+
VDDA
VCAP_2
USB_P
USB_N
USBID
SWDIO
OUT_INJ2
OUT_INJ6
OUT_PWM5
OUT_PWM4
OUT_PWM3
OUT_PWM2
OUT_INJ7
OUT_PWM6
OUT_PWM1
OUT_INJ8
OUT_INJ3
OUT_INJ4
SPI2_MOSI
SPI2_MISO
CAN2_TX
SPI2_CS
R104
100
R105
10k
R133
R134
Board ID
C133
1u
R101
470
D103
LED1
LED-RED-0603
D104
LED2
LED-GREEN-0603
D105
LED3
LED-BLUE-0603
D106
LED4
LED-YELLOW-0603
LED_GREEN
LED_YELLOW
OpAmp3
opamp.SchDoc
IN_AUX2
IN_AUX3
IN_CAM
IN_TPS
IN1
IN2
IN3
IN4
OUT1
OUT2
OUT3
OUT4
A21
A20
A19
A17
OpAmp4
opamp.SchDoc
IN_CLT
IN_MAP1
IN_IAT
IN_O2S
A11
A9
A14
R143
0
A13
WAKEUP
R145
OpAmp5
opamp_crank.SchDoc
IN_CRANK
IN_PPS
IN_KNOCK
IN_MAP2
IN1 (CRNK)
A24
A18
A15
A10
OpAmp6
opamp.SchDoc
IN_VSS
IN_AUX4
IN_AUX1
IN_O2S2
D5
A22
A23
A12
R143 populated: analog input O2S
R145 populated: WAKEUP by CAN
D102
USBM
USBP
VBUS
SRV05-4-P-T7
C131
2.2u
C127
100n
C130
100n
R131
0
R128
10k
R123
2.2k
R122
2.2k
I2C_SDA
I2C_SCL
*VIGN input is unprotected!
*A21 is duplicated for ADC and EINT
D107
B5819W
C140
4.7u
Y101
32.768 kHz
C115
12p
C116
12p
C119
100n
Y102
20 MHz
C132
18p
C136
18p
R121
10k
C147
100n
C122
100n
C124
100n
C120
100n
V33REF
V33A
GNDA
C113
100n
C114
2.2u

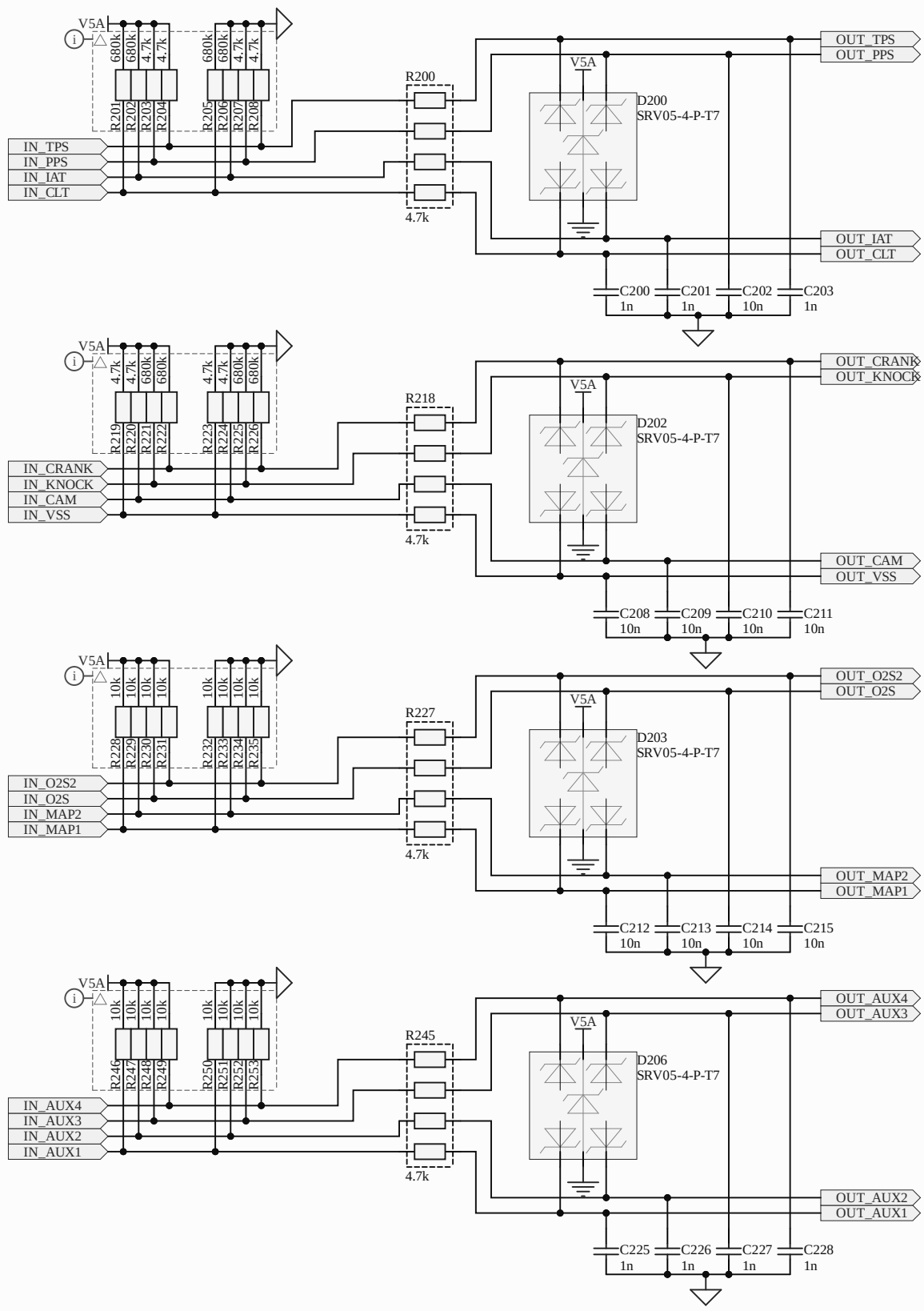
V5A
680k
4.7k
R201
R202
R203
R204
R205
R206
R207
R208
IN_TPS
IN_PPS
IN_IAT
IN_CLT
R200
4.7k
D200
SRV05-4-P-T7
OUT_TPS
OUT_PPS
OUT_IAT
OUT_CLT
C200 1n
C201 1n
C202 10n
C203 1n
R219
R220
R221
R222
R223
R224
R225
R226
IN_CRANK
IN_KNOCK
IN_CAM
IN_VSS
R218
D202
SRV05-4-P-T7
OUT_CRANK
OUT_KNOCK
OUT_CAM
OUT_VSS
C208 10n
C209 10n
C210 10n
C211 10n
10k
R228
R229
R230
R231
R232
R233
R234
R235
IN_O2S2
IN_O2S
IN_MAP2
IN_MAP1
R227
D203
SRV05-4-P-T7
OUT_O2S2
OUT_O2S
OUT_MAP2
OUT_MAP1
C212 10n
C213 10n
C214 10n
C215 10n
R246
R247
R248
R249
R250
R251
R252
R253
IN_AUX4
IN_AUX3
IN_AUX2
IN_AUX1
R245
D206
SRV05-4-P-T7
OUT_AUX4
OUT_AUX3
OUT_AUX2
OUT_AUX1
C225 1n
C226 1n
C227 1n
C228 1n

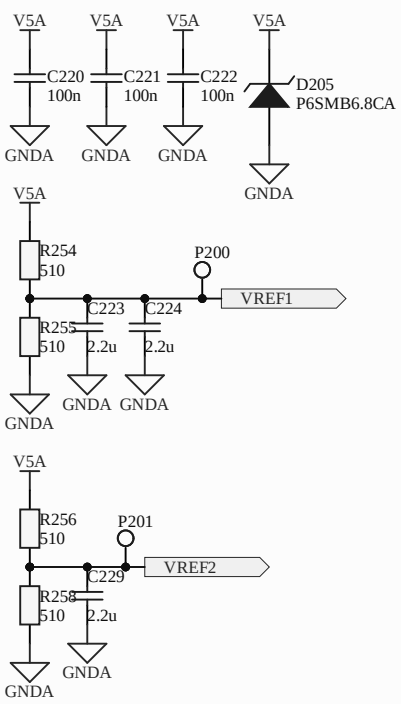
V5A
C220 100n
C221 100n
C222 100n
D205
P6SMB6.8CA
GNDA
R254 510
R255 510
P200
VREF1
C223 2.2u
C224 2.2u
R256 510
R258 510
P201
VREF2
C229 2.2u

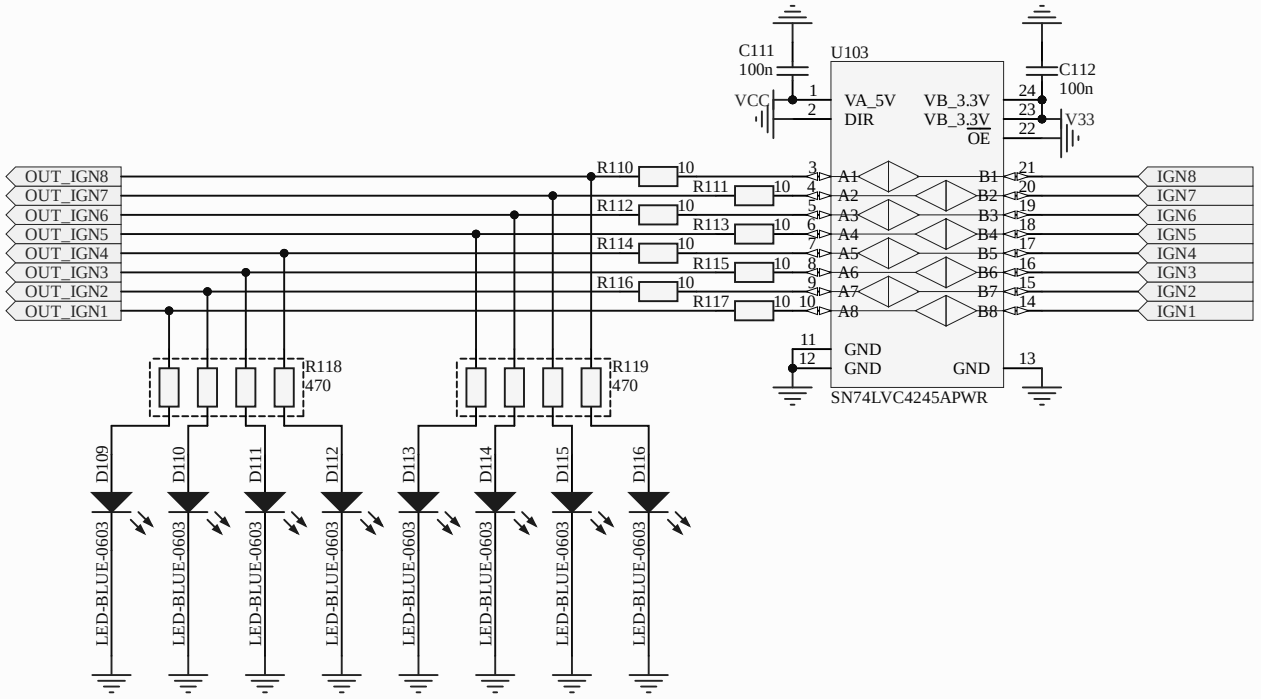
C111
100n
VCC
U103
VA_5V
DIR
VB_3.3V
VB_3.3V
OE
C112
100n
V33
GND
GND
GND
SN74LVC4245APWR
OUT_IGN8
OUT_IGN7
OUT_IGN6
OUT_IGN5
OUT_IGN4
OUT_IGN3
OUT_IGN2
OUT_IGN1
R110
R111
R112
R113
R114
R115
R116
R117
R118
470
R119
470
A1
A2
A3
A4
A5
A6
A7
A8
B1
B2
B3
B4
B5
B6
B7
B8
IGN8
IGN7
IGN6
IGN5
IGN4
IGN3
IGN2
IGN1
D109
D110
D111
D112
D113
D114
D115
D116
LED-BLUE-0603

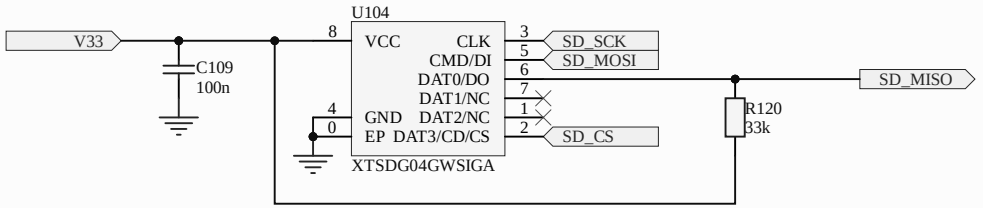
U104
V33
C109
100n
8
VCC
4
0
GND
EP
CLK
CMD/DI
DAT0/DO
DAT1/NC
DAT2/NC
DAT3/CD/CS
3
5
6
7
1
2
SD_SCK
SD_MOSI
SD_CS
SD_MISO
R120
33k
XTSDG04GWSIGA

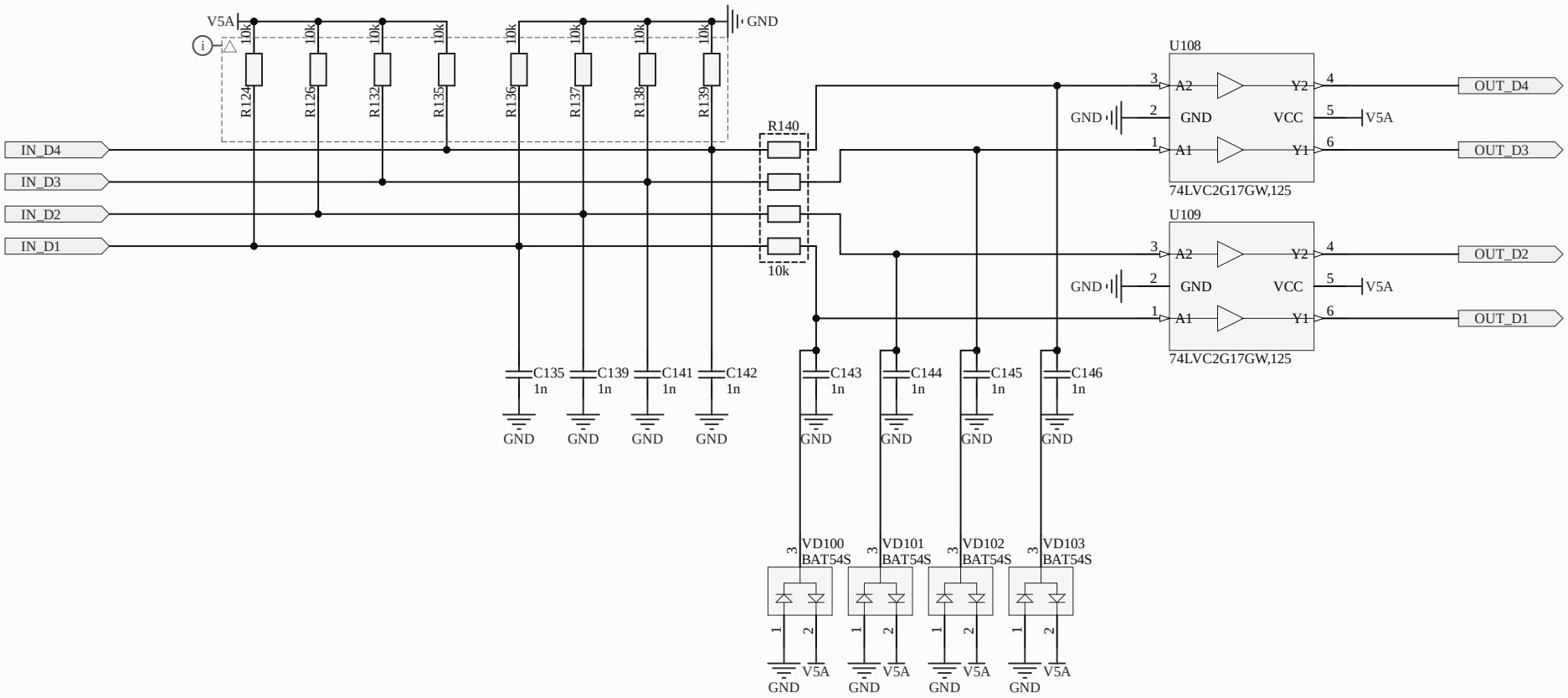
V5A
GND
R124 10k
R126 10k
R132 10k
R135 10k
R136 10k
R137 10k
R138 10k
R139 10k
R140 10k
IN_D4
IN_D3
IN_D2
IN_D1
U108
U109
74LVC2G17GW,125
74LVC2G17GW,125
A2
A1
GND
VCC
Y2
Y1
OUT_D4
OUT_D3
OUT_D2
OUT_D1
C135 1n
C139 1n
C141 1n
C142 1n
C143 1n
C144 1n
C145 1n
C146 1n
VD100 BAT54S
VD101 BAT54S
VD102 BAT54S
VD103 BAT54S

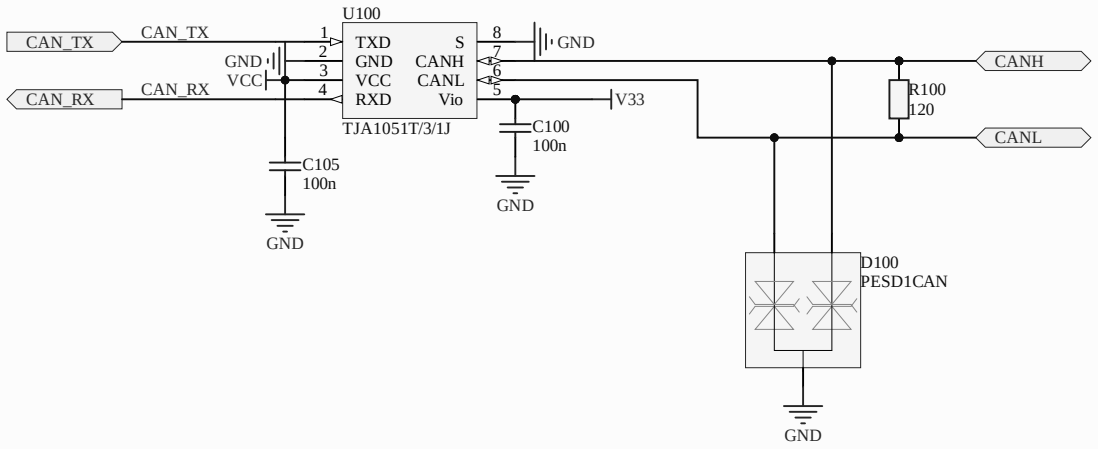
U100
CAN_TX
CAN_TX
CAN_RX
CAN_RX
GND
VCC
1
2
3
4
TXD
GND
VCC
RXD
S
CANH
CANL
Vio
8
7
6
5
GND
V33
CANH
CANL
R100
120
C105
100n
C100
100n
TJA1051T/3/1J
D100
PESD1CAN
GND
GND
GND

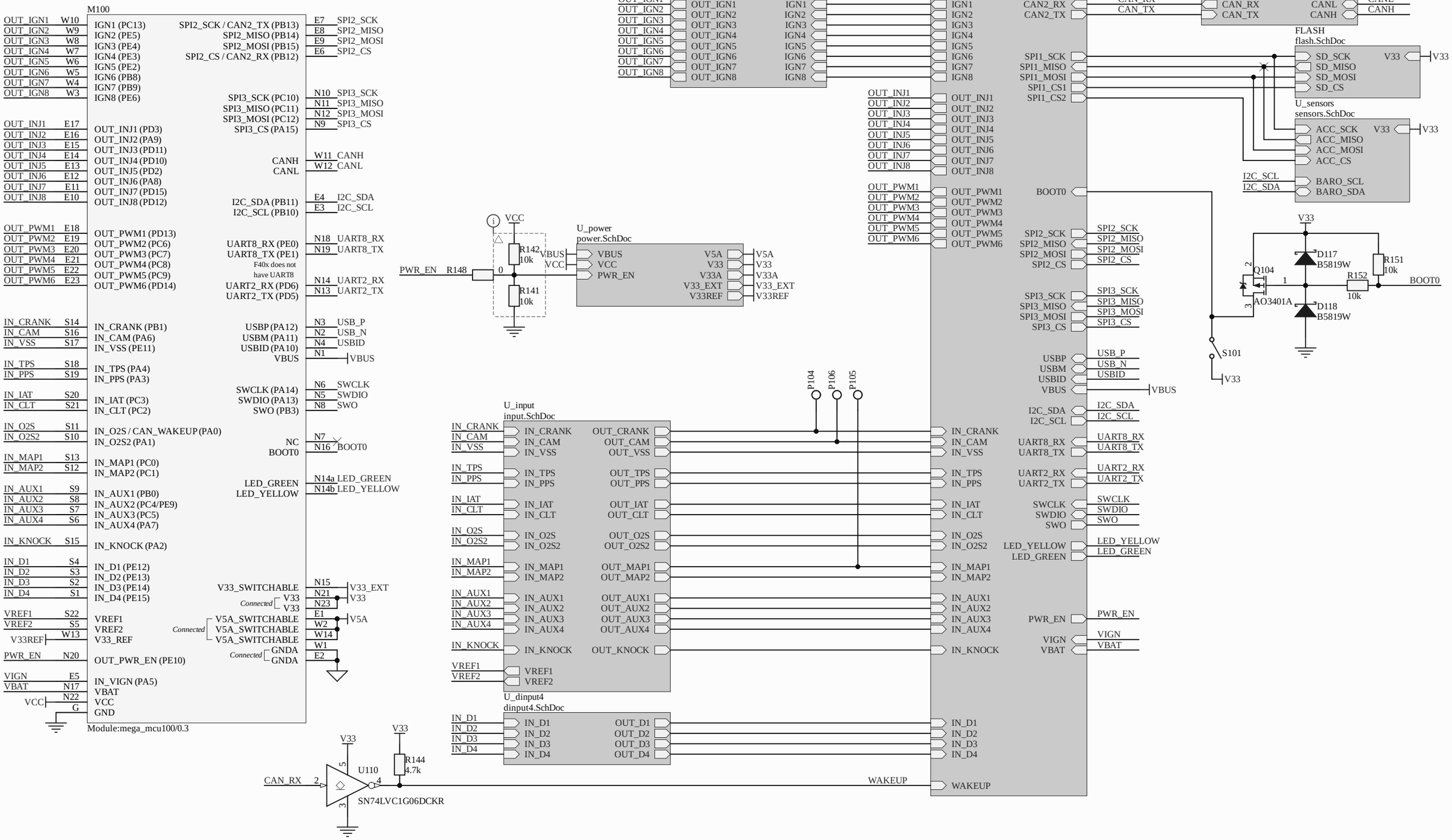
M100
OUT_IGN1 W10
OUT_IGN2 W9
OUT_IGN3 W8
OUT_IGN4 W7
OUT_IGN5 W6
OUT_IGN6 W5
OUT_IGN7 W4
OUT_IGN8 W3
IGN1 (PC13)
IGN2 (PE5)
IGN3 (PE4)
IGN4 (PE3)
IGN5 (PE2)
IGN6 (PB8)
IGN7 (PB9)
IGN8 (PE6)
OUT_INJ1 E17
OUT_INJ2 E16
OUT_INJ3 E15
OUT_INJ4 E14
OUT_INJ5 E13
OUT_INJ6 E12
OUT_INJ7 E11
OUT_INJ8 E10
OUT_INJ1 (PD3)
OUT_INJ2 (PA9)
OUT_INJ3 (PD11)
OUT_INJ4 (PD10)
OUT_INJ5 (PD2)
OUT_INJ6 (PA8)
OUT_INJ7 (PD15)
OUT_INJ8 (PD12)
OUT_PWM1 E18
OUT_PWM2 E19
OUT_PWM3 E20
OUT_PWM4 E21
OUT_PWM5 E22
OUT_PWM6 E23
OUT_PWM1 (PD13)
OUT_PWM2 (PC6)
OUT_PWM3 (PC7)
OUT_PWM4 (PC8)
OUT_PWM5 (PC9)
OUT_PWM6 (PD14)
IN_CRANK S14
IN_CAM S16
IN_VSS S17
IN_CRANK (PB1)
IN_CAM (PA6)
IN_VSS (PE11)
IN_TPS S18
IN_PPS S19
IN_TPS (PA4)
IN_PPS (PA3)
IN_IAT S20
IN_CLT S21
IN_IAT (PC3)
IN_CLT (PC2)
IN_O2S S11
IN_O2S2 S10
IN_O2S / CAN_WAKEUP (PA0)
IN_O2S2 (PA1)
IN_MAP1 S13
IN_MAP2 S12
IN_MAP1 (PC0)
IN_MAP2 (PC1)
IN_AUX1 S9
IN_AUX2 S8
IN_AUX3 S7
IN_AUX4 S6
IN_AUX1 (PB0)
IN_AUX2 (PC4/PE9)
IN_AUX3 (PC5)
IN_AUX4 (PA7)
IN_KNOCK S15
IN_KNOCK (PA2)
IN_D1 S4
IN_D2 S3
IN_D3 S2
IN_D4 S1
IN_D1 (PE12)
IN_D2 (PE13)
IN_D3 (PE14)
IN_D4 (PE15)
VREF1 S22
VREF2 S5
V33REF W13
VREF1
VREF2
V33_REF
PWR_EN N20
OUT_PWR_EN (PE10)
VIGN E5
VBAT N17
VCC N22
G
VCC
GND
SPI2_SCK / CAN2_TX (PB13)
SPI2_MISO (PB14)
SPI2_MOSI (PB15)
SPI2_CS / CAN2_RX (PB12)
E7 SPI2_SCK
E8 SPI2_MISO
E9 SPI2_MOSI
E6 SPI2_CS
SPI3_SCK (PC10)
SPI3_MISO (PC11)
SPI3_MOSI (PC12)
SPI3_CS (PA15)
N10 SPI3_SCK
N11 SPI3_MISO
N12 SPI3_MOSI
N9 SPI3_CS
CANH
CANL
W11 CANH
W12 CANL
I2C_SDA (PB11)
I2C_SCL (PB10)
E4 I2C_SDA
E3 I2C_SCL
UART8_RX (PE0)
UART8_TX (PE1)
F40x does not have UART8
UART2_RX (PD6)
UART2_TX (PD5)
N18 UART8_RX
N19 UART8_TX
N14 UART2_RX
N13 UART2_TX
USBP (PA12)
USBM (PA11)
USBID (PA10)
VBUS
N3 USB_P
N2 USB_N
N4 USBID
N1 VBUS
SWCLK (PA14)
SWDIO (PA13)
SWO (PB3)
N6 SWCLK
N5 SWDIO
N8 SWO
NC
BOOT0
N7
N16 BOOT0
LED_GREEN
LED_YELLOW
N14a LED_GREEN
N14b LED_YELLOW
V33_SWITCHABLE
Connected V33
Connected V5A_SWITCHABLE
Connected GNDA
N15 V33_EXT
N21 V33
N23 V33
E1 V5A
W2
W14
W1
E2
Module:mega_mcu100/0.3
U_ign8
ign8.SchDoc
OUT_IGN1 OUT_IGN2 OUT_IGN3 OUT_IGN4 OUT_IGN5 OUT_IGN6 OUT_IGN7 OUT_IGN8
IGN1 IGN2 IGN3 IGN4 IGN5 IGN6 IGN7 IGN8
U_mcu
mcu.SchDoc
IGN1 IGN2 IGN3 IGN4 IGN5 IGN6 IGN7 IGN8
OUT_INJ1 OUT_INJ2 OUT_INJ3 OUT_INJ4 OUT_INJ5 OUT_INJ6 OUT_INJ7 OUT_INJ8
OUT_PWM1 OUT_PWM2 OUT_PWM3 OUT_PWM4 OUT_PWM5 OUT_PWM6
CAN2_RX CAN2_TX
SPI1_SCK SPI1_MISO SPI1_MOSI SPI1_CS1 SPI1_CS2
BOOT0
SPI2_SCK SPI2_MISO SPI2_MOSI SPI2_CS
SPI3_SCK SPI3_MISO SPI3_MOSI SPI3_CS
USBP USBM USBID VBUS
I2C_SDA I2C_SCL
UART8_RX UART8_TX
UART2_RX UART2_TX
SWCLK SWDIO SWO
LED_YELLOW LED_GREEN
PWR_EN
VIGN VBAT
IN_CRANK IN_CAM IN_VSS IN_TPS IN_PPS IN_IAT IN_CLT IN_O2S IN_O2S2 IN_MAP1 IN_MAP2 IN_AUX1 IN_AUX2 IN_AUX3 IN_AUX4 IN_KNOCK
WAKEUP
U_can
can.SchDoc
CAN_RX CAN_TX
CANL CANH
FLASH
flash.SchDoc
SD_SCK SD_MISO SD_MOSI SD_CS
V33
U_sensors
sensors.SchDoc
ACC_SCK ACC_MISO ACC_MOSI ACC_CS
BARO_SCL BARO_SDA
I2C_SCL
I2C_SDA
S101
Q104
AO3401A
D117 B5819W
D118 B5819W
R151 10k
R152 10k
BOOT0
VCC
R142 10k
R141 10k
VBUS
PWR_EN R148
U_power
power.SchDoc
VBUS VCC PWR_EN
V5A V33 V33A V33_EXT V33REF
U_input
input.SchDoc
IN_CRANK IN_CAM IN_VSS
OUT_CRANK OUT_CAM OUT_VSS
IN_TPS IN_PPS
OUT_TPS OUT_PPS
IN_IAT IN_CLT
OUT_IAT OUT_CLT
IN_O2S IN_O2S2
OUT_O2S OUT_O2S2
IN_MAP1 IN_MAP2
OUT_MAP1 OUT_MAP2
IN_AUX1 IN_AUX2 IN_AUX3 IN_AUX4
OUT_AUX1 OUT_AUX2 OUT_AUX3 OUT_AUX4
IN_KNOCK OUT_KNOCK
VREF1 VREF2
U_dinput4
dinput4.SchDoc
IN_D1 IN_D2 IN_D3 IN_D4
OUT_D1 OUT_D2 OUT_D3 OUT_D4
P104 P106 P105
U110
SN74LVC1G06DCKR
CAN_RX
R144 4.7k
WAKEUP

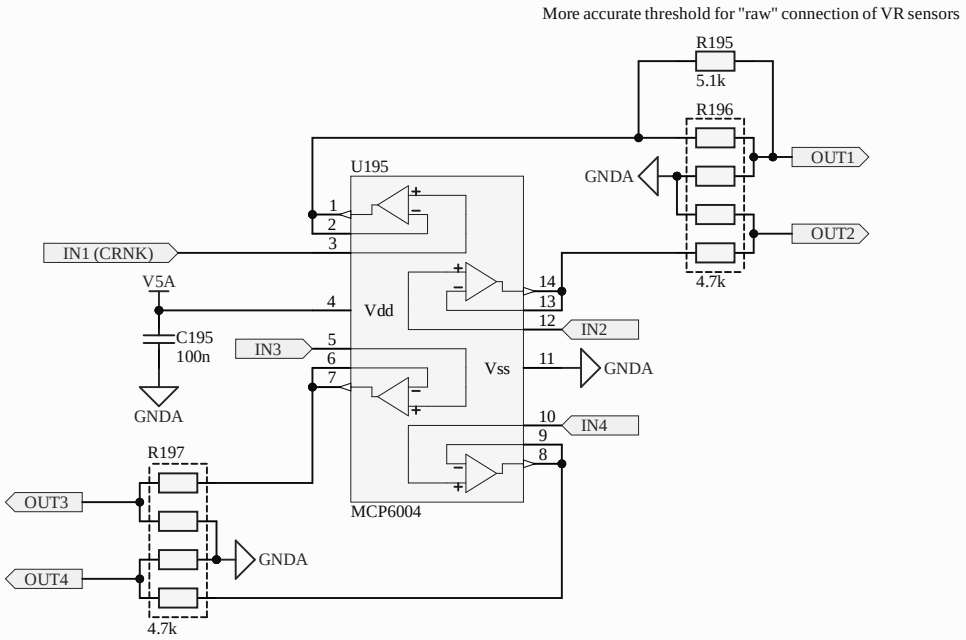
More accurate threshold for "raw" connection of VR sensors
R195
5.1k
R196
OUT1
GNDA
OUT2
4.7k
U195
1
2
3
IN1 (CRNK)
V5A
4
Vdd
14
13
12
IN2
C195
100n
IN3
5
6
7
Vss
11
GNDA
GNDA
10
IN4
9
8
R197
OUT3
OUT4
GNDA
4.7k
MCP6004

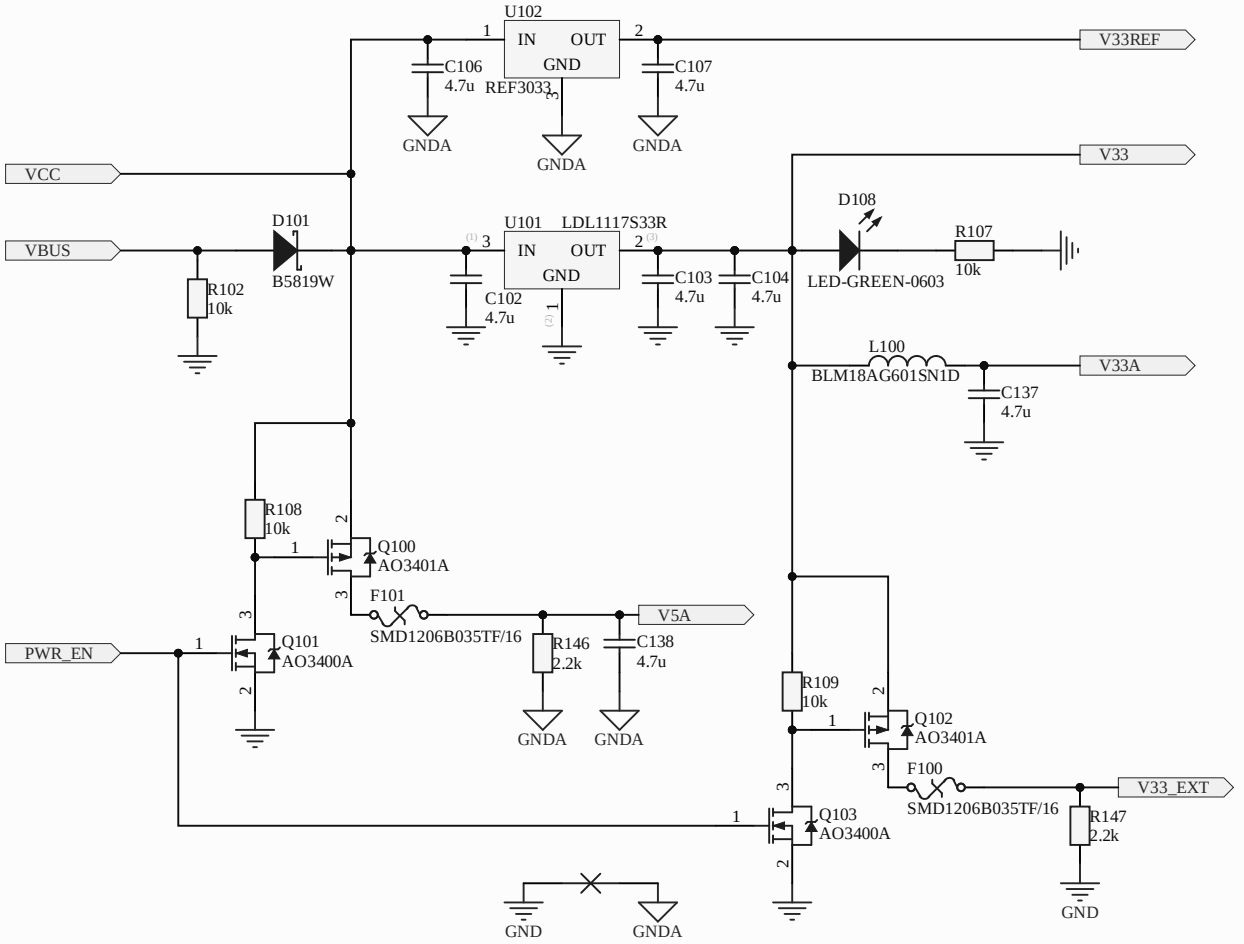

Title		
Size A4	Number	Revision
Date: 1.10.2025		Sheet of
File: C:\Work\..\power.SchDoc		Drawn By:

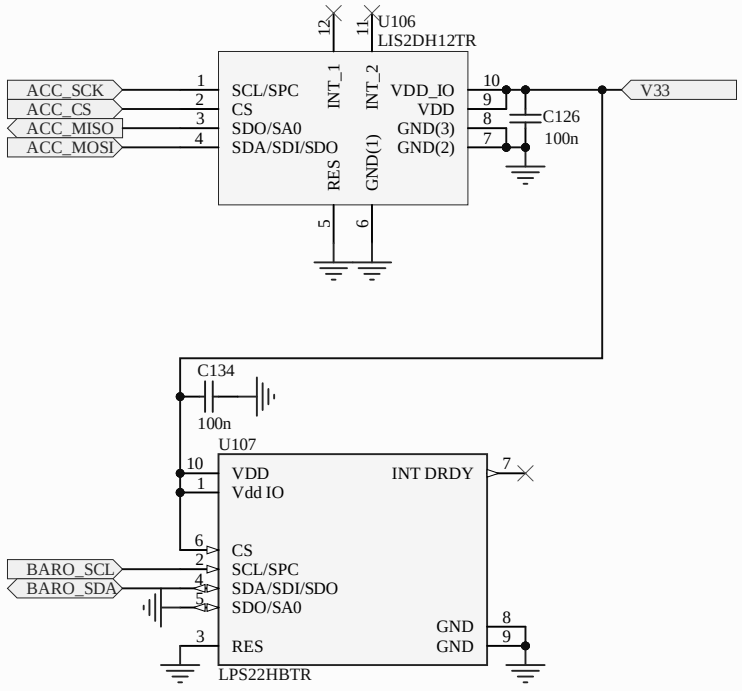
U106
LIS2DH12TR
ACC_SCK
ACC_CS
ACC_MISO
ACC_MOSI
SCL/SPC
CS
SDO/SA0
SDA/SDI/SDO
INT_1
INT_2
RES
GND(1)
VDD_IO
VDD
GND(3)
GND(2)
C126
100n
V33
C134
100n
U107
VDD
Vdd IO
INT DRDY
CS
SCL/SPC
SDA/SDI/SDO
SDO/SA0
RES
GND
GND
BARO_SCL
BARO_SDA
LPS22HBTR

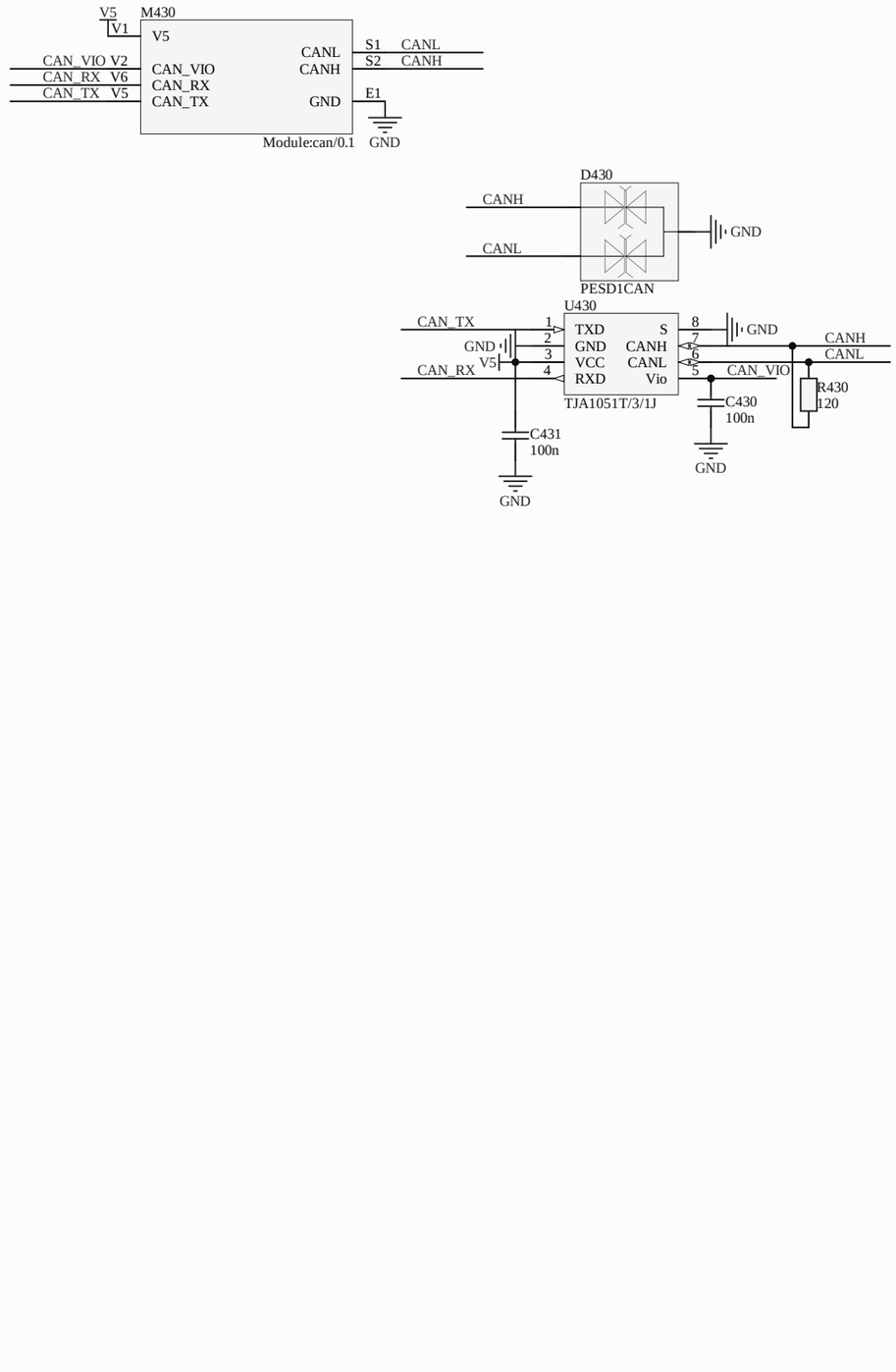

Title: ***Hellen-One CAN***			***rusEFI EMS*** ***Hellen-One Platform*** *https://rusefi.com/s/hellen72*
Size: A3	Author: andreika	Revision: 0.1	
Date: 02.03.2021		Sheet 1 of 1	