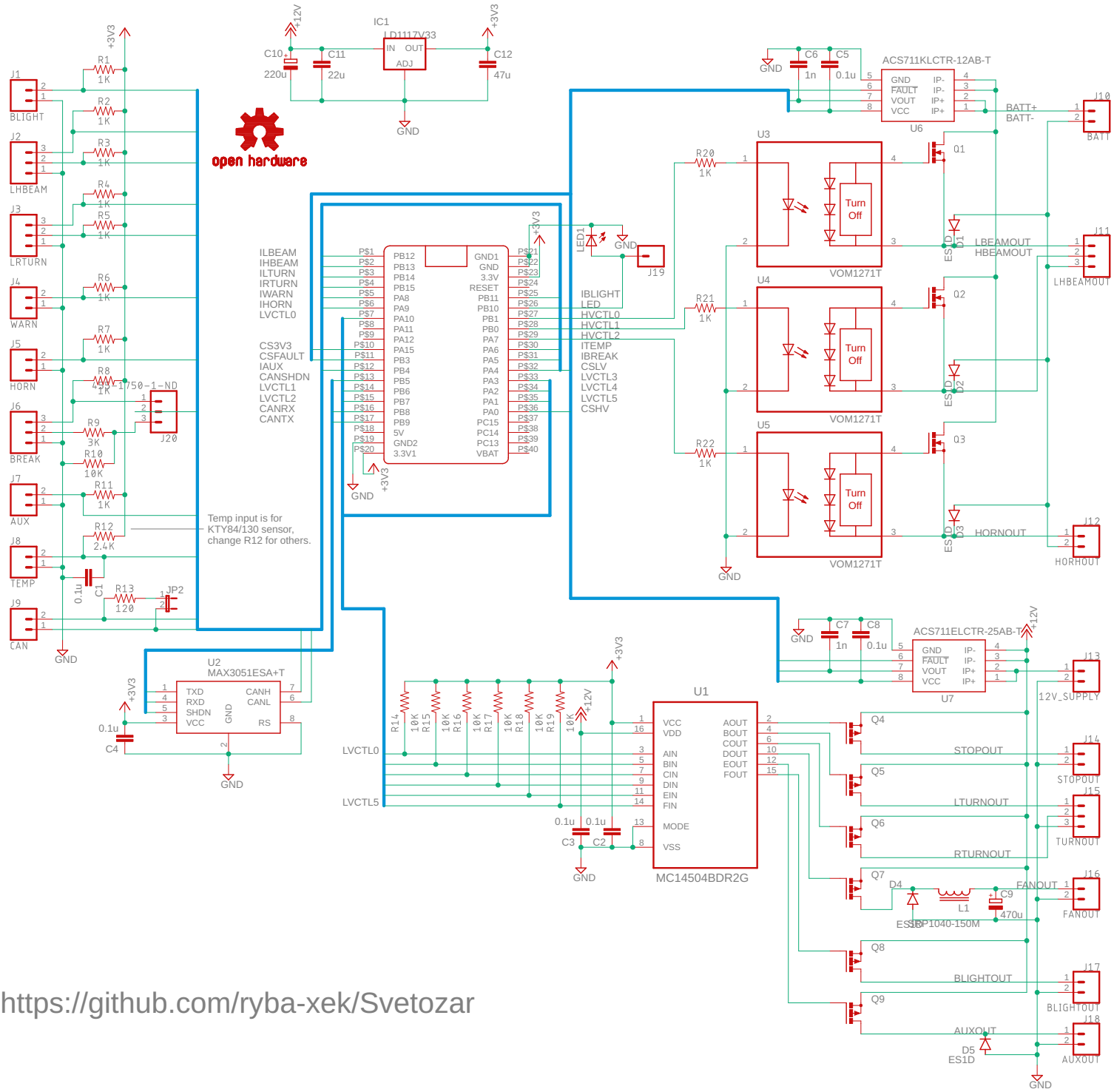

https://github.com/ryba-xek/Svetozar