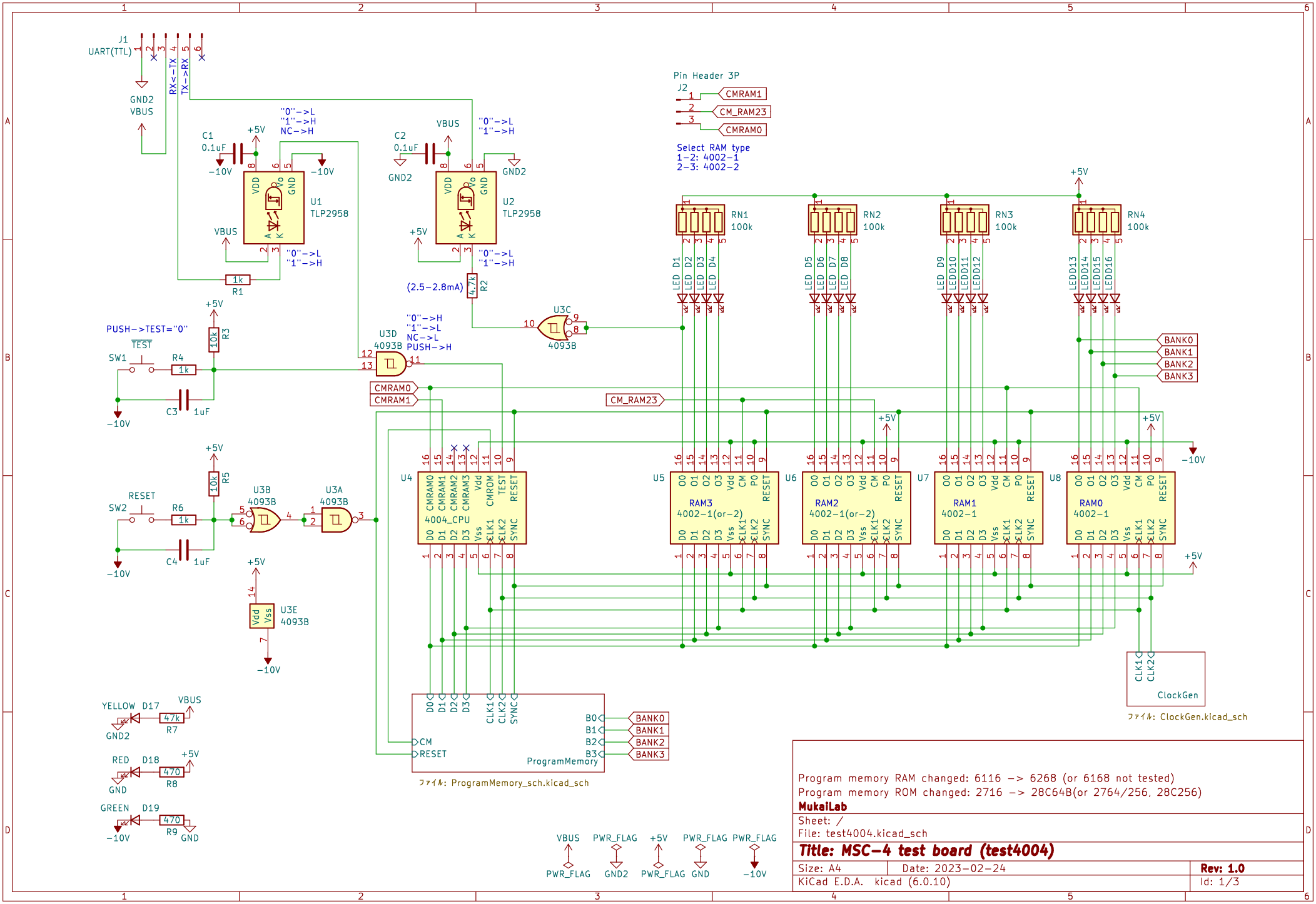
J1
UART(TTL)
GND2
VBUS
RX<-TX
TX->RX
C1
0.1uF
+5V
-10V
"0"->L
"1"->H
NC->H
U1
TLP2958
VDD
Vo
GND
VBUS
R1
1k
C2
0.1uF
GND2
U2
TLP2958
(2.5-2.8mA)
R2
4.7k
U3C
4093B
Pin Header 3P
J2
CMRAM1
CM_RAM23
CMRAM0
Select RAM type
1-2: 4002-1
2-3: 4002-2
RN1
100k
RN2
100k
RN3
100k
RN4
100k
LED D1
LED D2
LED D3
LED D4
LED D5
LED D6
LED D7
LED D8
LED D9
LEDD10
LEDD11
LEDD12
LEDD13
LEDD14
LEDD15
LEDD16
BANK0
BANK1
BANK2
BANK3
PUSH->TEST="0"
TEST
SW1
R4
1k
R3
10k
C3
1uF
"0"->H
"1"->L
NC->L
PUSH->H
U3D
4093B
CMRAM0
CMRAM1
CM_RAM23
RESET
SW2
R6
1k
R5
10k
C4
1uF
U3B
4093B
U3A
4093B
U3E
4093B
Vdd
Vss
U4
CMRAM0
CMRAM1
CMRAM2
CMRAM3
Vdd
CMROM
TEST
RESET
4004_CPU
D0
D1
D2
D3
Vss
CLK1
CLK2
SYNC
U5
RAM3
4002-1(or-2)
U6
RAM2
4002-1(or-2)
U7
RAM1
4002-1
U8
RAM0
4002-1
O0
O1
O2
O3
Vdd
CM
P0
RESET
CLK1
CLK2
SYNC
ClockGen
ファイル: ClockGen.kicad_sch
CM
RESET
B0
B1
B2
B3
ProgramMemory
ファイル: ProgramMemory_sch.kicad_sch
YELLOW
D17
47k
R7
RED
D18
470
R8
GREEN
D19
470
R9
GND
VBUS
PWR_FLAG
GND2
+5V
-10V
Program memory RAM changed: 6116 -> 6268 (or 6168 not tested)
Program memory ROM changed: 2716 -> 28C64B(or 2764/256, 28C256)
MukaiLab
Sheet: /
File: test4004.kicad_sch
Title: MSC-4 test board (test4004)
Size: A4
Date: 2023-02-24
Rev: 1.0
KiCad E.D.A. kicad (6.0.10)
Id: 1/3

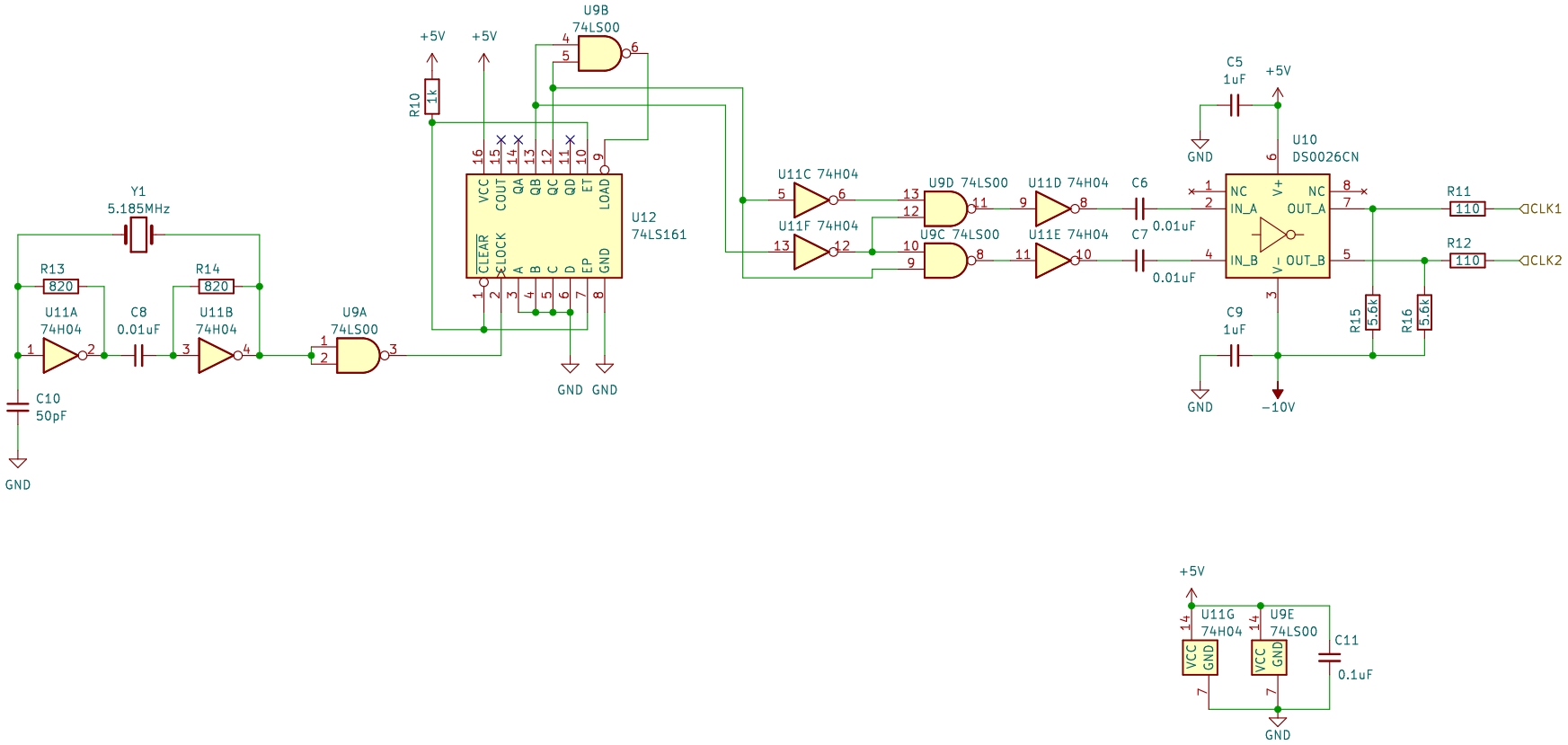

Sheet: /ClockGen/
File: ClockGen.kicad_sch

Title:

Size: A4	Date:	Rev:
KiCad E.D.A. kicad (6.0.10)		Id: 2/3

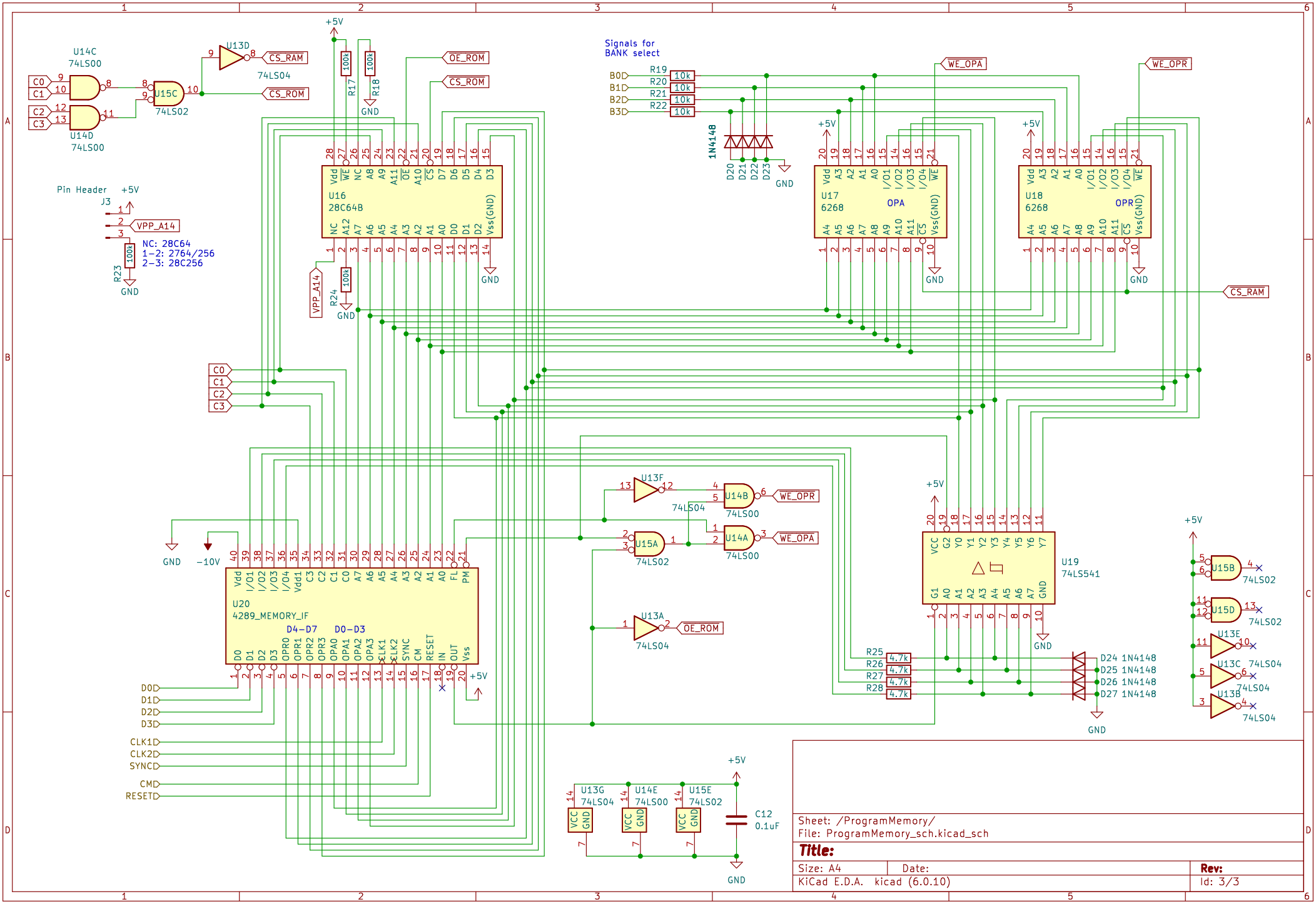
U14C
74LS00
U14D
74LS00
U15C
74LS02
U13D
74LS04
CS_RAM
CS_ROM
OE_ROM
+5V
GND
R17
R18
100k
Signals for
BANK select
B0
B1
B2
B3
R19
R20
R21
R22
10k
1N4148
D20
D21
D22
D23
WE_OPA
WE_OPR
U16
28C64B
U17
6268
OPA
U18
6268
OPR
Pin Header
J3
VPP_A14
R23
R24
NC: 28C64
1-2: 2764/256
2-3: 28C256
C0
C1
C2
C3
U13F
74LS04
U14B
74LS00
U15A
74LS02
U14A
74LS00
U13A
74LS04
U20
4289_MEMORY_IF
D4-D7
D0-D3
-10V
D0
D1
D2
D3
CLK1
CLK2
SYNC
CM
RESET
U19
74LS541
R25
R26
R27
R28
4.7k
D24 1N4148
D25 1N4148
D26 1N4148
D27 1N4148
U15B
U15D
U13E
U13C
U13B
U13G
74LS04
U14E
74LS00
U15E
74LS02
C12
0.1uF
Sheet: /ProgramMemory/
File: ProgramMemory_sch.kicad_sch
Title:
Size: A4
Date:
Rev:
KiCad E.D.A. kicad (6.0.10)
Id: 3/3