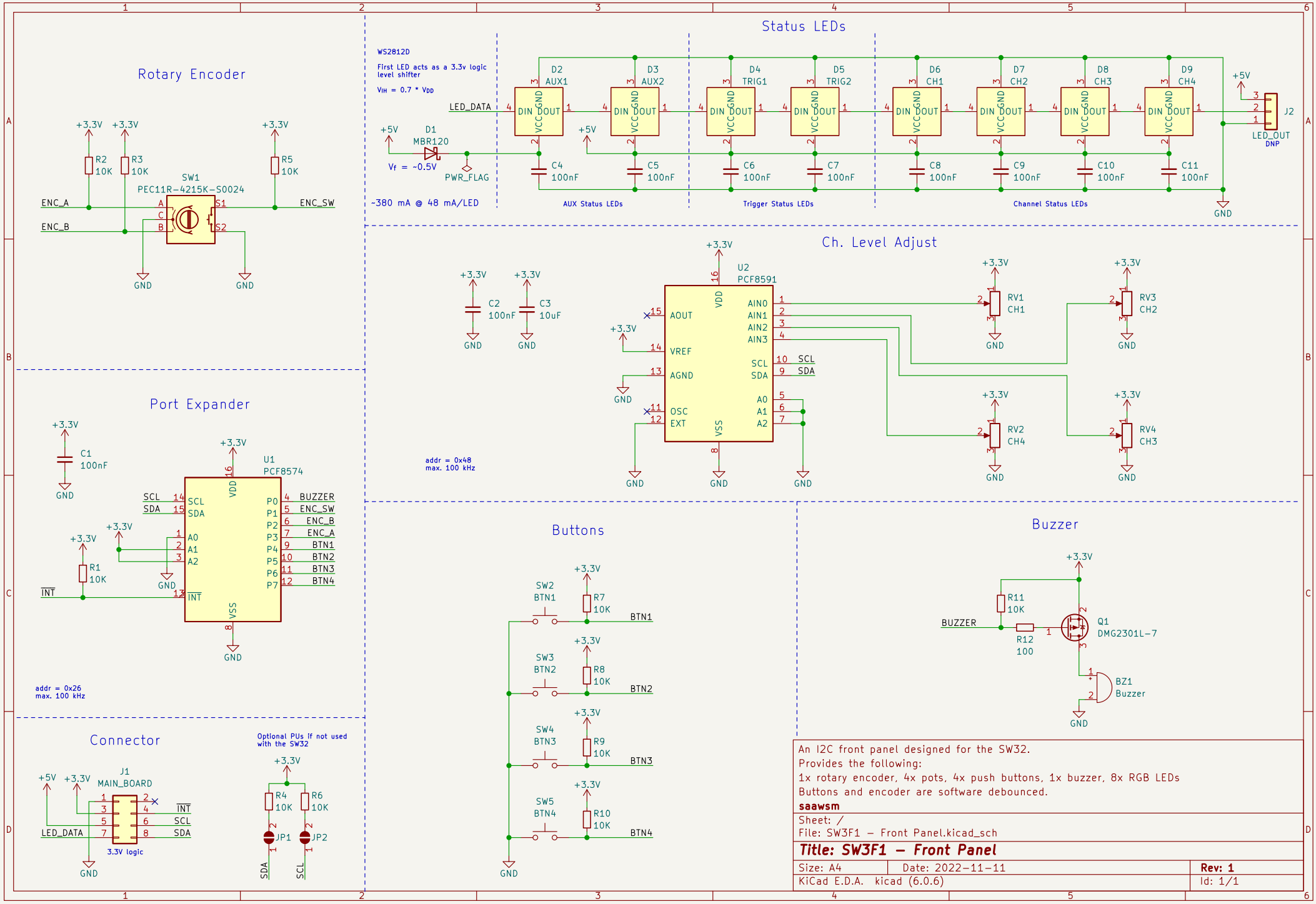
Rotary Encoder
+3.3V
R2 10K
R3 10K
R5 10K
SW1
PEC11R-4215K-S0024
ENC_A
ENC_B
ENC_SW
GND
Status LEDs
WS2812D
First LED acts as a 3.3v logic level shifter
VIH = 0.7 * VDD
LED_DATA
+5V
D1 MBR120
Vf = ~0.5V
PWR_FLAG
~380 mA @ 48 mA/LED
D2 AUX1
D3 AUX2
D4 TRIG1
D5 TRIG2
D6 CH1
D7 CH2
D8 CH3
D9 CH4
DIN DOUT VCC GND
C4 100nF
C5 100nF
C6 100nF
C7 100nF
C8 100nF
C9 100nF
C10 100nF
C11 100nF
AUX Status LEDs
Trigger Status LEDs
Channel Status LEDs
J2
LED_OUT
DNP
Ch. Level Adjust
C2 100nF
C3 10uF
U2
PCF8591
AOUT
VREF
AGND
OSC
EXT
VDD
VSS
AIN0
AIN1
AIN2
AIN3
SCL
SDA
A0
A1
A2
RV1 CH1
RV2 CH4
RV3 CH2
RV4 CH3
addr = 0x48
max. 100 kHz
Port Expander
C1 100nF
U1
PCF8574
P0
P1
P2
P3
P4
P5
P6
P7
BUZZER
ENC_SW
ENC_B
ENC_A
BTN1
BTN2
BTN3
BTN4
R1 10K
INT
addr = 0x26
max. 100 kHz
Buttons
SW2 BTN1
SW3 BTN2
SW4 BTN3
SW5 BTN4
R7 10K
R8 10K
R9 10K
R10 10K
Buzzer
R11 10K
R12 100
Q1 DMG2301L-7
BZ1 Buzzer
Connector
J1 MAIN_BOARD
3.3V logic
Optional PUs if not used with the SW32
R4 10K
R6 10K
JP1
JP2
An I2C front panel designed for the SW32.
Provides the following:
1x rotary encoder, 4x pots, 4x push buttons, 1x buzzer, 8x RGB LEDs
Buttons and encoder are software debounced.
saawsm
Sheet: /
File: SW3F1 – Front Panel.kicad_sch
Title: SW3F1 – Front Panel
Size: A4
Date: 2022-11-11
Rev: 1
KiCad E.D.A. kicad (6.0.6)
Id: 1/1