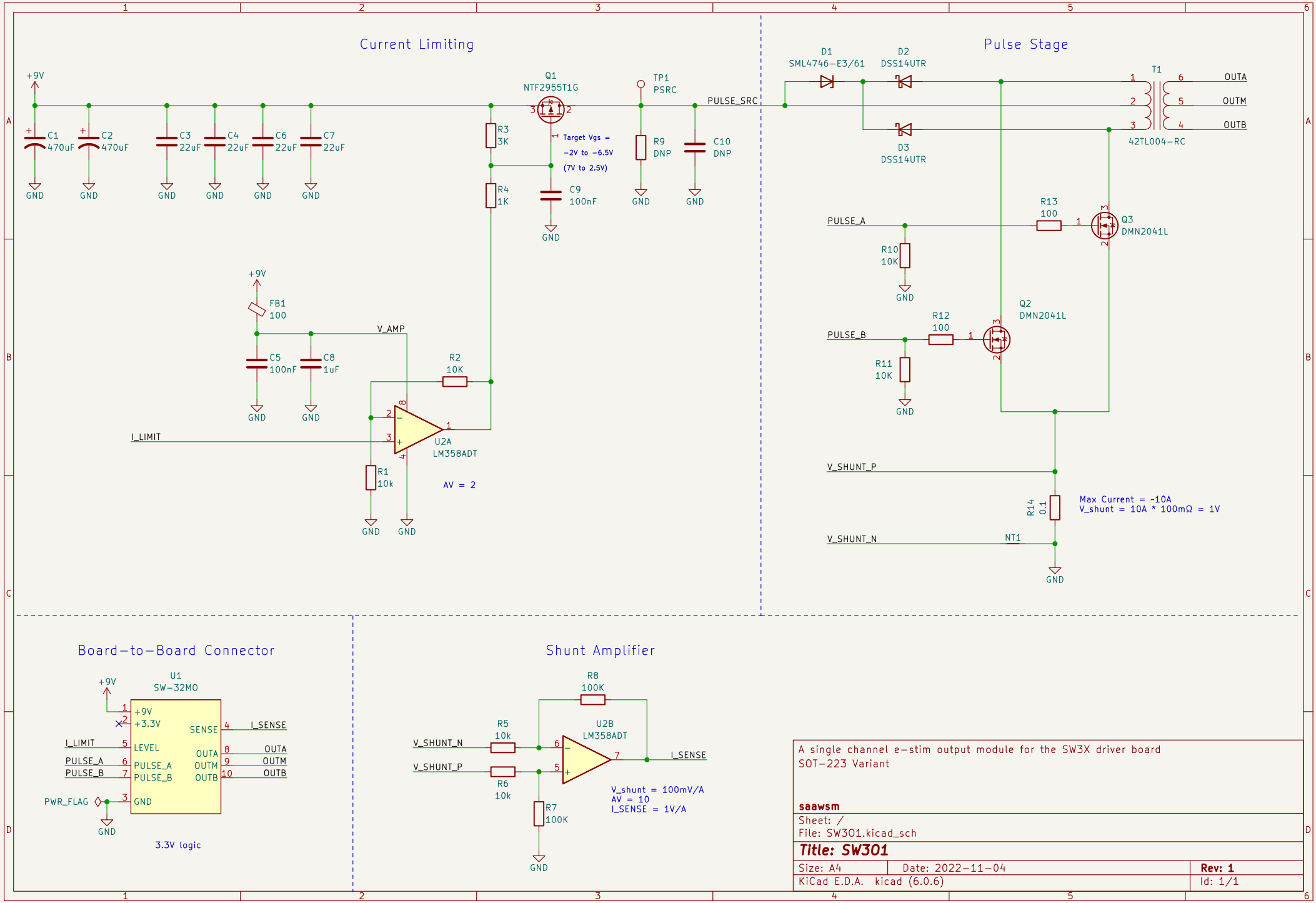

A single channel e-stim output module for the SW3X driver board
SOT-223 Variant

saawsm

Sheet: /
File: SW301.kicad_sch

Title: SW301

Size: A4	Date: 2022-11-04	**Rev: 1**
KiCad E.D.A. kicad (6.0.6)		Id: 1/1