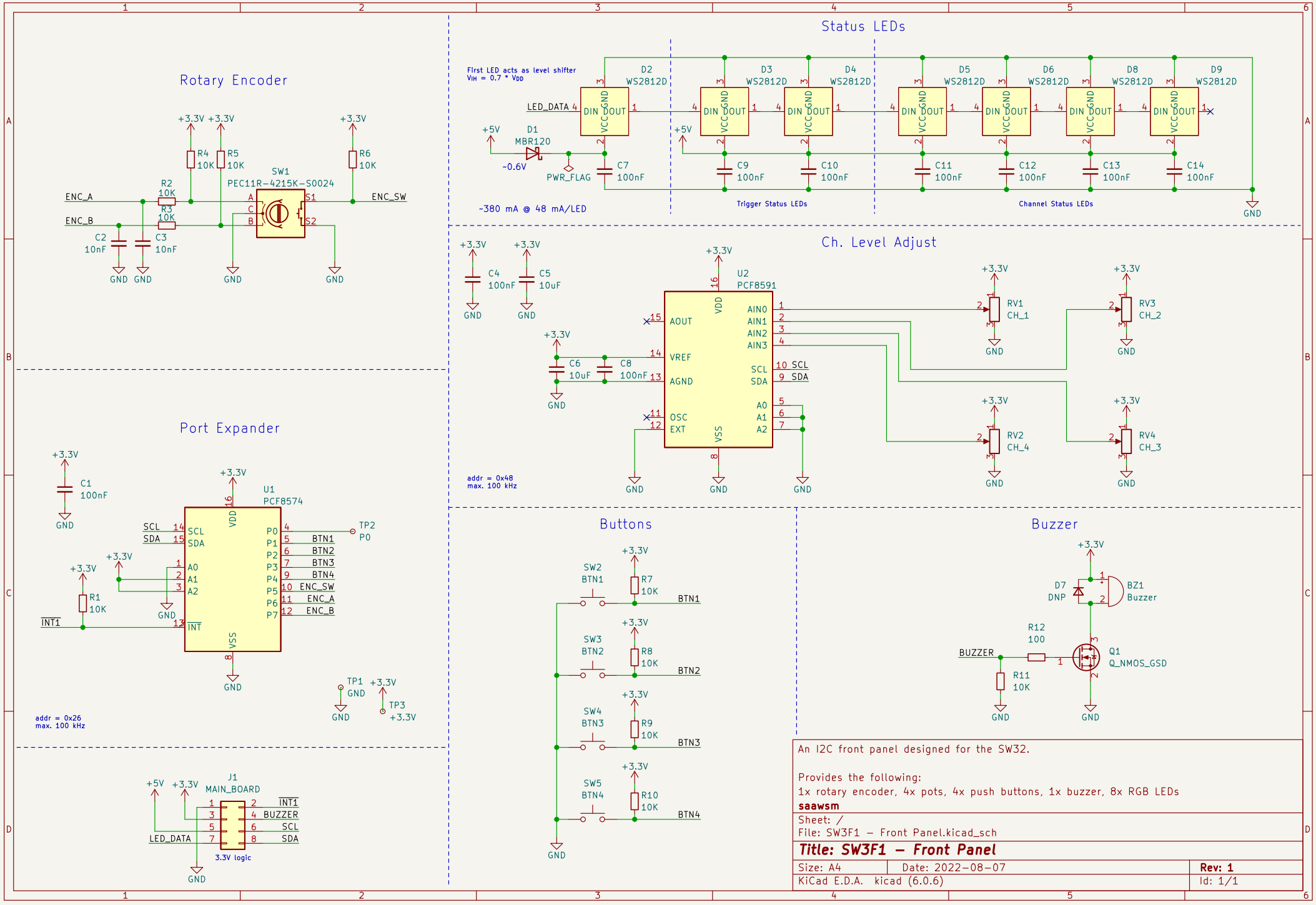
Rotary Encoder
+3.3V +3.3V
+3.3V
R4 10K
R5 10K
R6 10K
SW1
PEC11R-4215K-S0024
R2 10K
R3 10K
ENC_A
ENC_B
ENC_SW
C2 10nF
C3 10nF
GND GND
GND
GND
Status LEDs
First LED acts as level shifter
VIH = 0.7 * VDD
D2 WS2812D
D3 WS2812D
D4 WS2812D
D5 WS2812D
D6 WS2812D
D8 WS2812D
D9 WS2812D
LED_DATA
DIN DOUT VCC GND
+5V
D1 MBR120
~0.6V
PWR_FLAG
C7 100nF
C9 100nF
C10 100nF
C11 100nF
C12 100nF
C13 100nF
C14 100nF
~380 mA @ 48 mA/LED
Trigger Status LEDs
Channel Status LEDs
GND
Ch. Level Adjust
+3.3V +3.3V
C4 100nF
C5 10uF
U2
PCF8591
AOUT
VREF
AGND
OSC
EXT
VDD
VSS
AIN0
AIN1
AIN2
AIN3
SCL
SDA
A0
A1
A2
C6 10uF
C8 100nF
RV1 CH_1
RV2 CH_4
RV3 CH_2
RV4 CH_3
addr = 0x48
max. 100 kHz
Port Expander
C1 100nF
U1
PCF8574
SCL
SDA
A0
A1
A2
INT
P0
P1
P2
P3
P4
P5
P6
P7
BTN1
BTN2
BTN3
BTN4
ENC_SW
ENC_A
ENC_B
TP2 P0
R1 10K
INT1
TP1 GND
TP3 +3.3V
addr = 0x26
max. 100 kHz
J1
MAIN_BOARD
+5V +3.3V
INT1
BUZZER
SCL
SDA
LED_DATA
3.3V logic
Buttons
SW2 BTN1
SW3 BTN2
SW4 BTN3
SW5 BTN4
R7 10K
R8 10K
R9 10K
R10 10K
Buzzer
D7 DNP
BZ1 Buzzer
R12 100
R11 10K
BUZZER
Q1 Q_NMOS_GSD
An I2C front panel designed for the SW32.
Provides the following:
1x rotary encoder, 4x pots, 4x push buttons, 1x buzzer, 8x RGB LEDs
saawsm
Sheet: /
File: SW3F1 - Front Panel.kicad_sch
Title: SW3F1 - Front Panel
Size: A4
Date: 2022-08-07
Rev: 1
KiCad E.D.A. kicad (6.0.6)
Id: 1/1