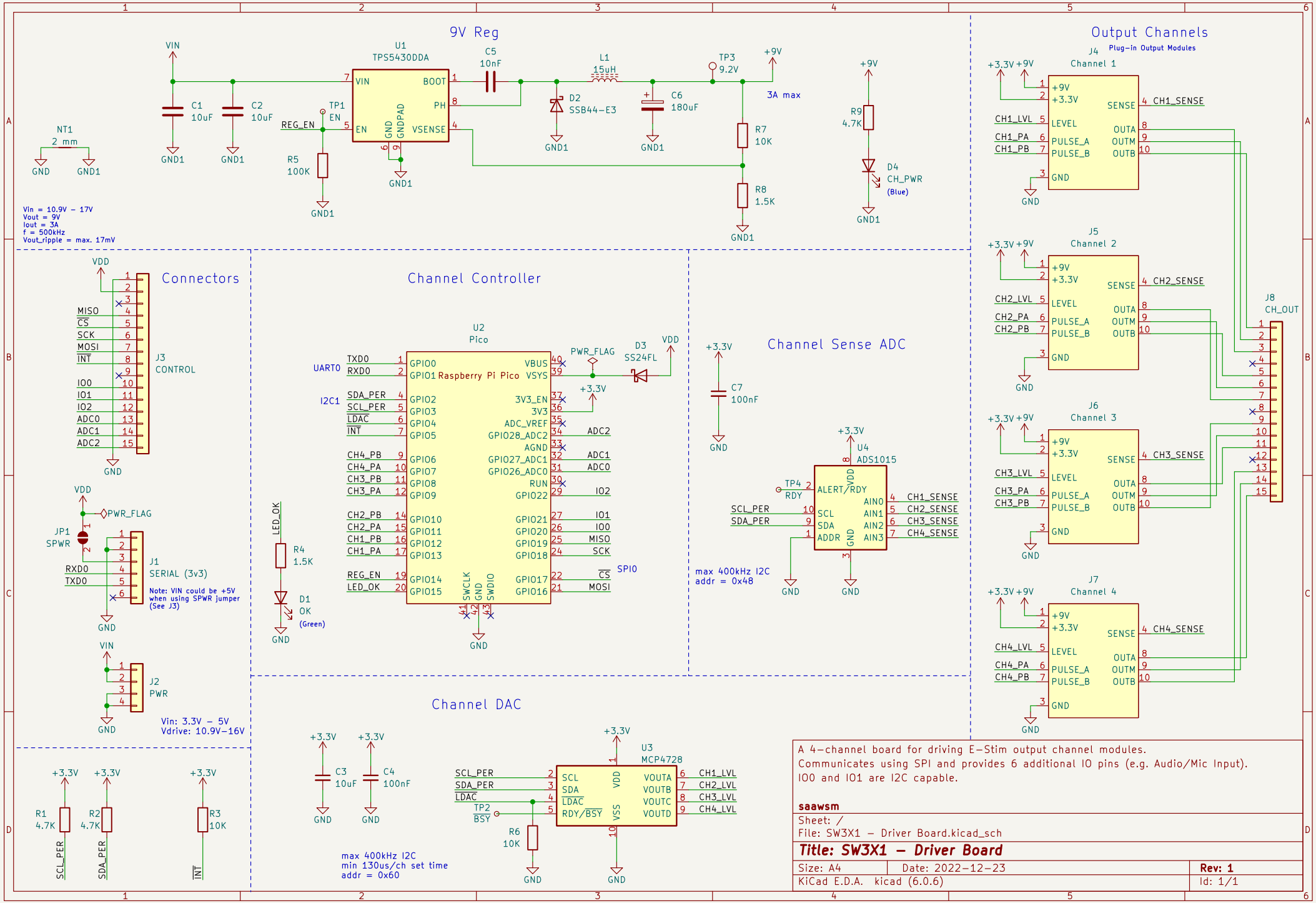
9V Reg
U1
TPS5430DDA
VIN
BOOT
PH
VSENSE
EN
GND
GNDPAD
C1
10uF
C2
10uF
C5
10nF
L1
15uH
D2
SSB44-E3
C6
180uF
TP3
9.2V
+9V
3A max
R7
10K
R8
1.5K
R9
4.7K
D4
CH_PWR
(Blue)
TP1
EN
REG_EN
R5
100K
NT1
2 mm
GND
GND1
Vin = 10.9V - 17V
Vout = 9V
Iout = 3A
f = 500kHz
Vout_ripple = max. 17mV
Output Channels
J4
Plug-in Output Modules
Channel 1
J5
Channel 2
J6
Channel 3
J7
Channel 4
+3.3V
+9V
SENSE
LEVEL
PULSE_A
PULSE_B
OUTA
OUTM
OUTB
CH1_SENSE
CH1_LVL
CH1_PA
CH1_PB
CH2_SENSE
CH2_LVL
CH2_PA
CH2_PB
CH3_SENSE
CH3_LVL
CH3_PA
CH3_PB
CH4_SENSE
CH4_LVL
CH4_PA
CH4_PB
J8
CH_OUT
Connectors
VDD
MISO
CS
SCK
MOSI
INT
IO0
IO1
IO2
ADC0
ADC1
ADC2
J3
CONTROL
PWR_FLAG
JP1
SPWR
RXD0
TXD0
J1
SERIAL (3v3)
Note: VIN could be +5V when using SPWR jumper (See J3)
J2
PWR
Vin: 3.3V - 5V
Vdrive: 10.9V-16V
R1
4.7K
R2
4.7K
R3
10K
SCL_PER
SDA_PER
INT
Channel Controller
U2
Pico
Raspberry Pi Pico
UART0
I2C1
TXD0
RXD0
SDA_PER
SCL_PER
LDAC
INT
CH4_PB
CH4_PA
CH3_PB
CH3_PA
CH2_PB
CH2_PA
CH1_PB
CH1_PA
REG_EN
LED_OK
GPIO0
GPIO1
GPIO2
GPIO3
GPIO4
GPIO5
GPIO6
GPIO7
GPIO8
GPIO9
GPIO10
GPIO11
GPIO12
GPIO13
GPIO14
GPIO15
VBUS
VSYS
3V3_EN
3V3
ADC_VREF
GPIO28_ADC2
AGND
GPIO27_ADC1
GPIO26_ADC0
RUN
GPIO22
GPIO21
GPIO20
GPIO19
GPIO18
GPIO17
GPIO16
SWCLK
SWDIO
ADC2
ADC1
ADC0
IO2
IO1
IO0
MISO
SCK
CS
MOSI
SPI0
PWR_FLAG
D3
SS24FL
VDD
+3.3V
LED_OK
R4
1.5K
D1
OK
(Green)
Channel Sense ADC
C7
100nF
U4
ADS1015
TP4
RDY
ALERT/RDY
SCL
SDA
ADDR
AIN0
AIN1
AIN2
AIN3
max 400kHz I2C
addr = 0x48
Channel DAC
C3
10uF
C4
100nF
U3
MCP4728
VOUTA
VOUTB
VOUTC
VOUTD
RDY/BSY
TP2
BSY
R6
10K
max 400kHz I2C
min 130us/ch set time
addr = 0x60
A 4-channel board for driving E-Stim output channel modules.
Communicates using SPI and provides 6 additional IO pins (e.g. Audio/Mic Input).
IO0 and IO1 are I2C capable.
saawsm
Sheet: /
File: SW3X1 - Driver Board.kicad_sch
Title: SW3X1 - Driver Board
Size: A4
Date: 2022-12-23
Rev: 1
KiCad E.D.A. kicad (6.0.6)
Id: 1/1