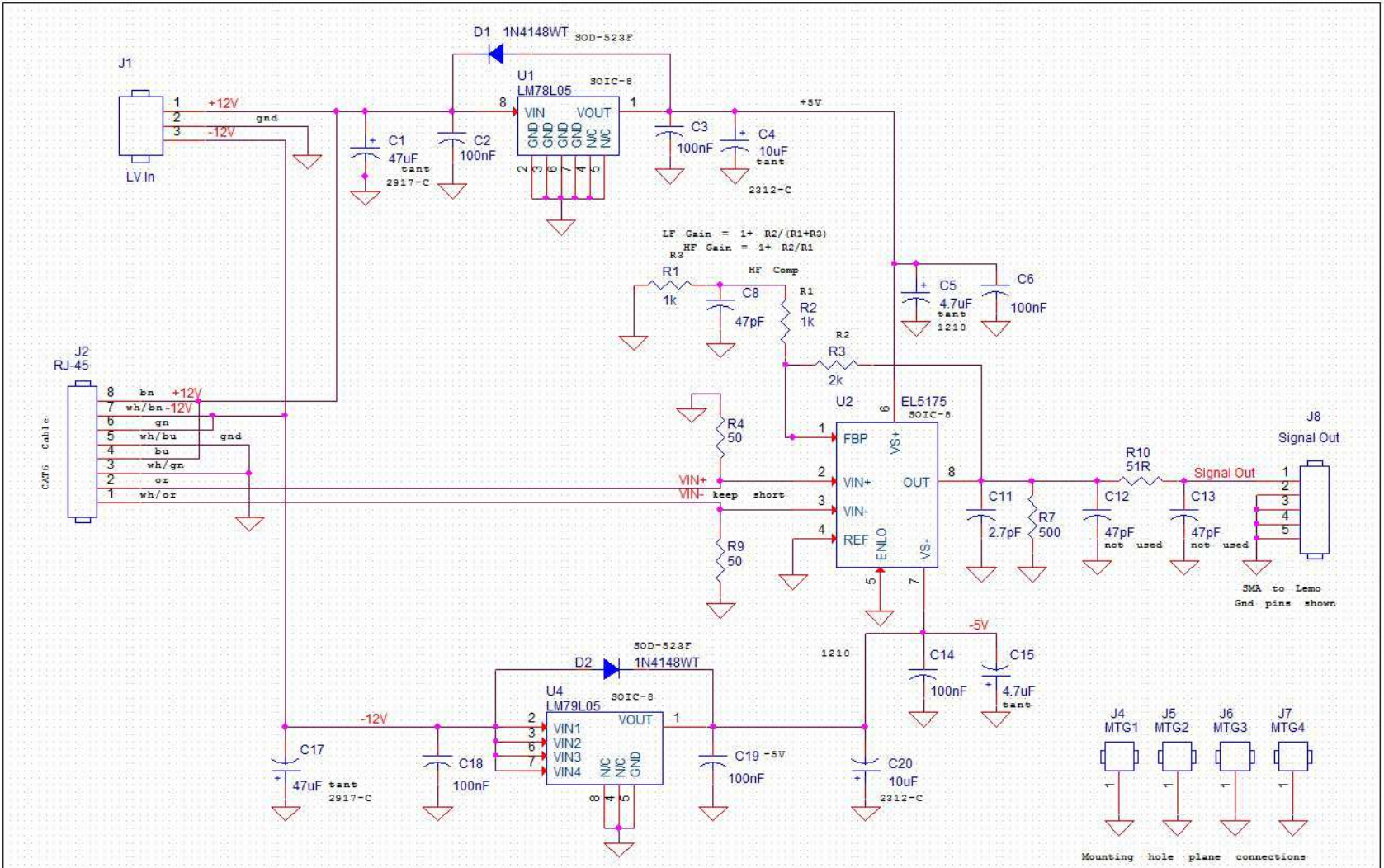

Notes:
1. Receiver is co-located with CAEN VME64 Digitizer.
2. CAEN VME64 Digitizer input is a LEMO connector.
3. CAEN VME64 Digitizer is a V1724 (50 ohm input).
4. Make 4 separate receiver boards .
5. The 4 boards will be co-located in a module which will then plug into a crate with power.

University of Victoria
British Columbia • Canada

Title	Schematic 3: HE3 Detector - Line Receiver Ver 3	
Size A	Document Number <Doc>	Rev 3.0
Date: Monday, October 06, 2014	Sheet 1 of 1	