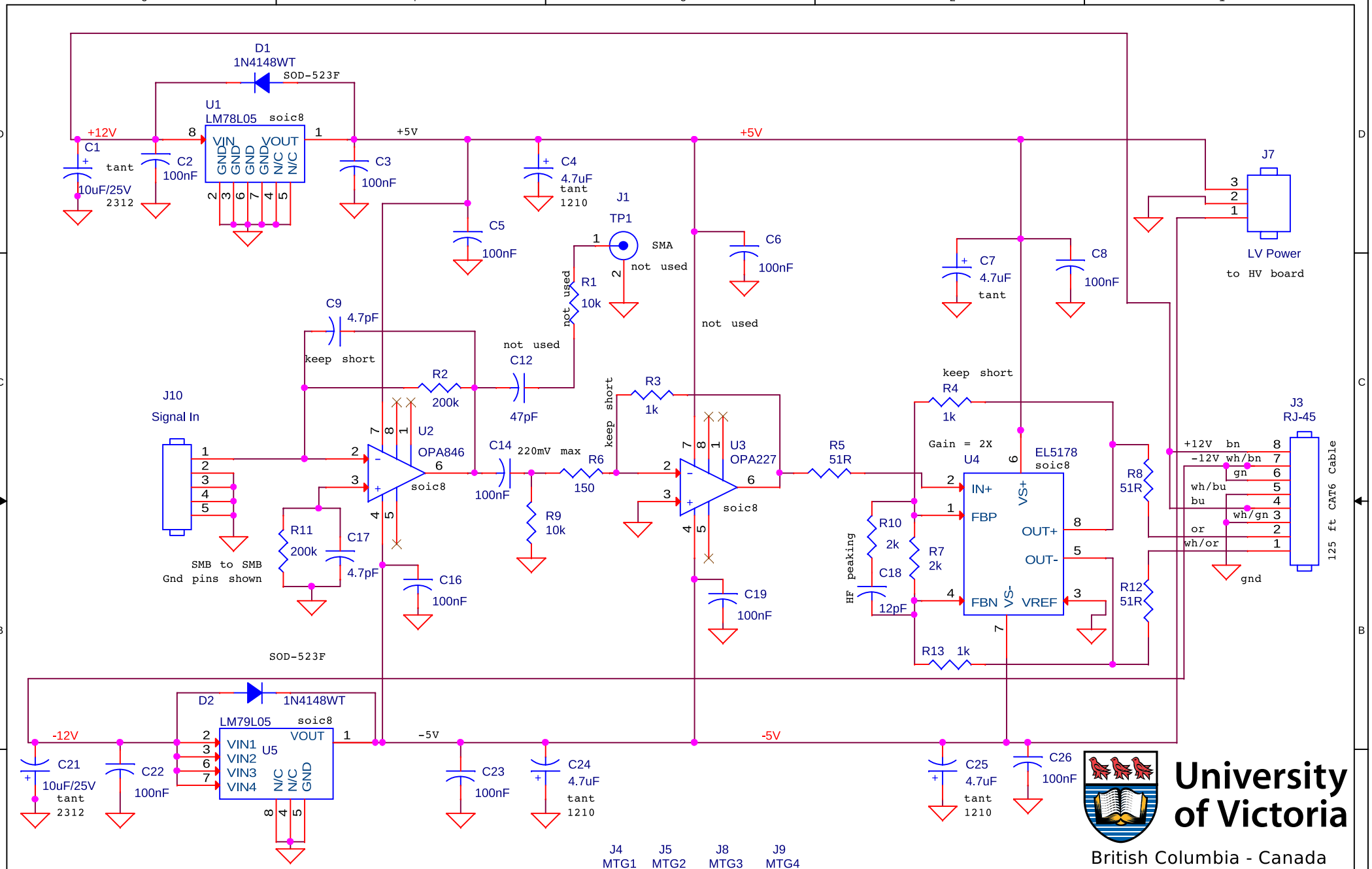

Notes:
1. OPA846 = 12.6mA supply I.
2. OPA227U = 0.8mA supply I.
3. EL5178 = 12.5mA supply I.
3. LM79L05 = 6mA quiescent I. Output I = 100mA.
3. LM78L05 = 3mA quiescent I. Output I - 100mA.
4. Total current for all three PCBs is about 50mA on both +/- supplies.

Title	Schematic 2: HE3 Detector Preamp with Line Driver Ver 3	
Size A	Document Number <Doc>	Rev 3.0
Date: Friday, March 20, 2015	Sheet 1 of 1	