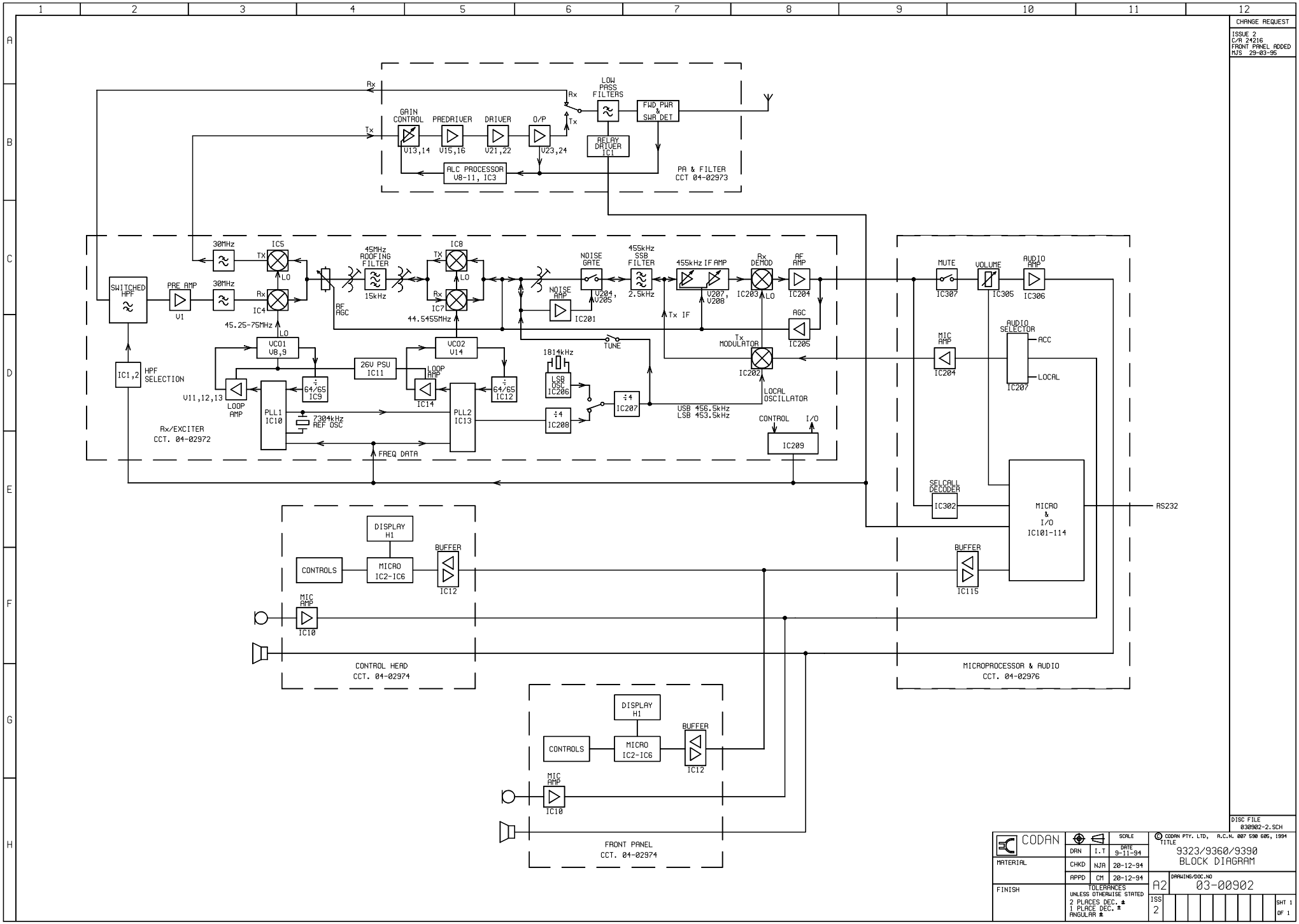
CHANGE REQUEST
ISSUE 2
C/R 24216
FRONT PANEL ADDED
MJS 29-03-95
Rx
Tx
LOW PASS FILTERS
GAIN CONTROL
PREDRIVER
DRIVER
O/P
FWD PWR & SWR DET
RELAY DRIVER IC1
V13,14
V15,16
V21,22
V23,24
ALC PROCESSOR V8-11, IC3
PA & FILTER CCT 04-02973
SWITCHED HPF
PRE AMP
V1
30MHz
IC5
IC4
LO
45.25-75MHz
RF AGC
45MHz ROOFING FILTER
15kHz
IC8
IC7
44.5455MHz
NOISE GATE
NOISE AMP
IC201
V204, V205
455kHz SSB FILTER
2.5kHz
455kHz IF AMP
V207, V208
Rx DEMOD
IC203
AF AMP
IC204
AGC
IC205
Tx IF
TUNE
Tx MODULATOR
IC202
LOCAL OSCILLATOR
1814kHz
LSB OSC IC206
÷4 IC207
÷4 IC208
USB 456.5kHz
LSB 453.5kHz
CONTROL
I/O
IC209
IC1,2
HPF SELECTION
VCO1 V8,9
VCO2 V14
26V PSU IC11
LOOP AMP
IC14
÷ 64/65 IC9
÷ 64/65 IC12
V11,12,13
PLL1 IC10
PLL2 IC13
7304kHz REF OSC
FREQ DATA
Rx/EXCITER CCT. 04-02972
MUTE
IC307
VOLUME
IC305
AUDIO AMP
IC306
MIC AMP
IC204
AUDIO SELECTOR
IC207
ACC
LOCAL
SELCALL DECODER
IC302
MICRO & I/O IC101-114
RS232
BUFFER
IC115
DISPLAY H1
CONTROLS
MICRO IC2-IC6
BUFFER
IC12
MIC AMP
IC10
CONTROL HEAD CCT. 04-02974
MICROPROCESSOR & AUDIO CCT. 04-02976
DISPLAY H1
CONTROLS
MICRO IC2-IC6
BUFFER
IC12
MIC AMP
IC10
FRONT PANEL CCT. 04-02974
DISC FILE 030902-2.SCH
CODAN
MATERIAL
FINISH
SCALE
DRN I.T 9-11-94
CHKD NJA 20-12-94
APPD CM 20-12-94
TOLERANCES UNLESS OTHERWISE STATED
2 PLACES DEC. ±
1 PLACE DEC. ±
ANGULAR ±
© CODAN PTY. LTD, A.C.N. 007 590 605, 1994
TITLE
9323/9360/9390
BLOCK DIAGRAM
A2
DRAWING/DOC.NO
03-00902
ISS 2
SHT 1 OF 1

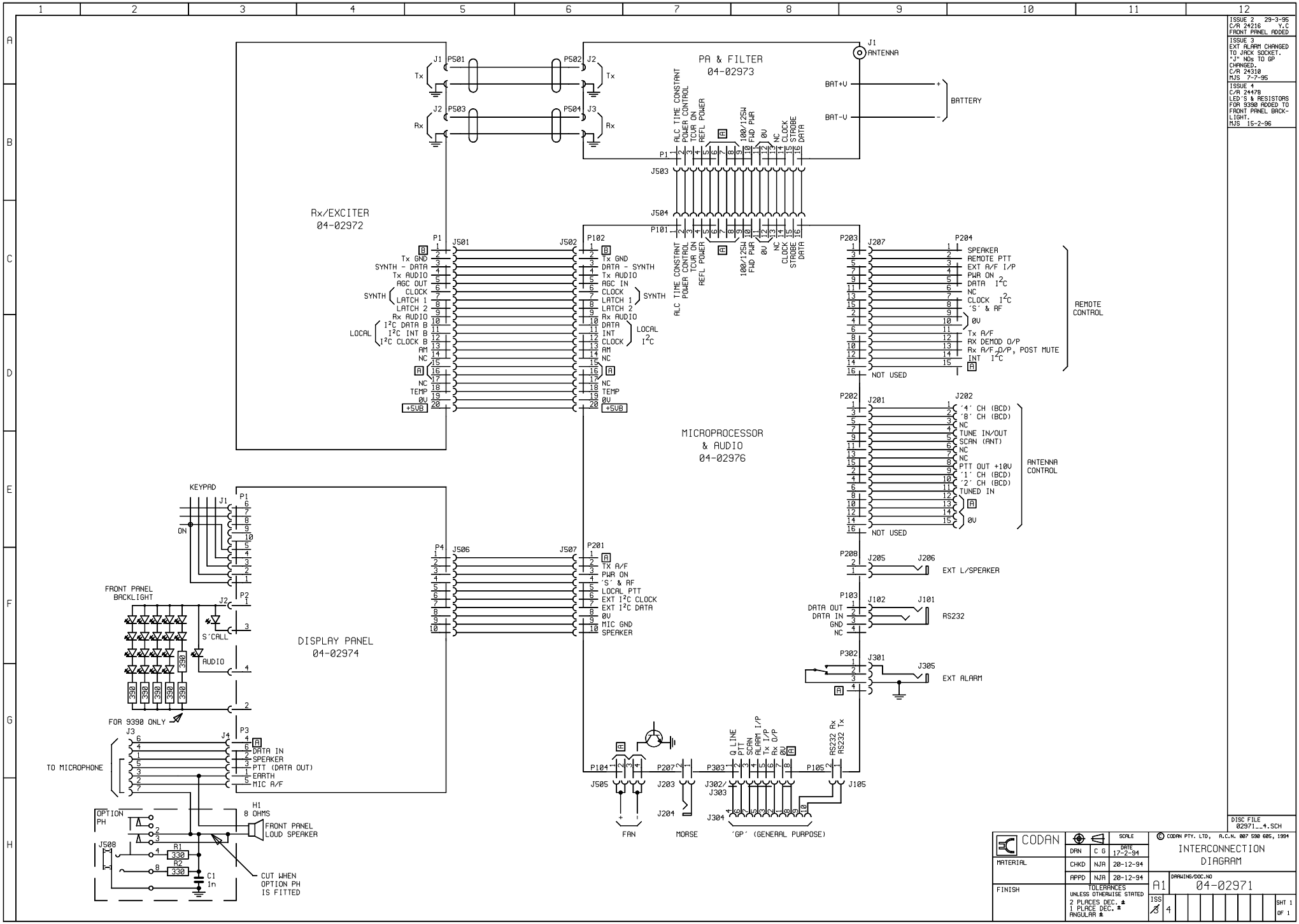

ISSUE 2 29-3-95
C/R 24216 Y.C
FRONT PANEL ADDED

ISSUE 3
EXT ALARM CHANGED TO JACK SOCKET.
"J" NOs TO GP CHANGED.
C/R 24310
MJS 7-7-95

ISSUE 4
C/R 24478
LED'S & RESISTORS FOR 9390 ADDED TO FRONT PANEL BACK-LIGHT.
MJS 15-2-96

DISC FILE
02971__4.SCH

CODAN

MATERIAL	DRN	C G	17-2-94
	CHKD	NJA	20-12-94
	APPD	NJA	20-12-94
FINISH	TOLERANCES UNLESS OTHERWISE STATED 2 PLACES DEC. ± 1 PLACE DEC. ± ANGULAR ±		

SCALE

© CODAN PTY. LTD, A.C.N. 007 590 605, 1994

INTERCONNECTION
DIAGRAM

A1 DRAWING/DOC.NO 04-02971

ISS 4

SHT 1 OF 1

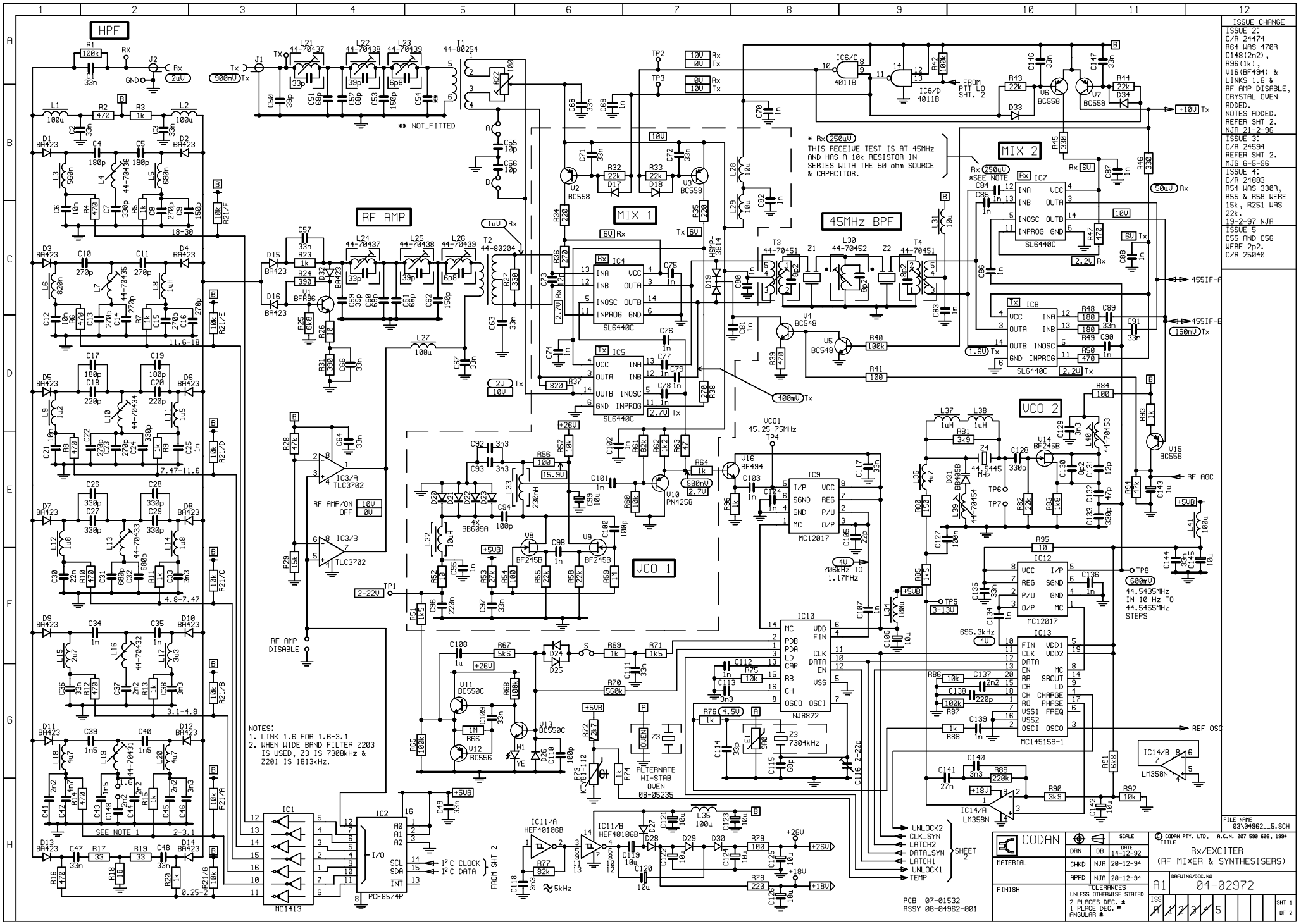
HPF
RF AMP
MIX 1
45MHz BPF
MIX 2
VCO 1
VCO 2
IC1 MC1413
IC2 PCF8574P
IC3/A TLC3702
IC3/B TLC3702
IC4 SL6440C
IC5 SL6440C
IC6/C 4011B
IC6/D 4011B
IC7 SL6440C
IC8 SL6440C
IC9 MC12017
IC10 NJ8822
IC11/A HEF40106B
IC11/B HEF40106B
IC12 MC12017
IC13 MC14515S-1
IC14/A LM358N
IC14/B LM358N
V1 BFR96
V2 BC558
V3 BC558
V4 BC548
V5 BC548
V6 BC558
V7 BC558
V10 PN4258
V11 BC550C
V12 BC556
V13 BC550C
V14 BF245B
V15 BC556
V16 BF494
V8 BF245B
V9 BF245B
T1 44-80254
T2 44-80204
T3 44-70451
T4 44-70451
Z1
Z2
Z3 7304kHz
Z4 44.5445 MHz
VCO1 45.25-75MHz
NOTES:
1. LINK 1.6 FOR 1.6-3.1
2. WHEN WIDE BAND FILTER Z203 IS USED, Z3 IS 7300kHz & Z201 IS 1813kHz.
** NOT_FITTED
* Rx 250uV
THIS RECEIVE TEST IS AT 45MHz AND HAS A 10k RESISTOR IN SERIES WITH THE 50 ohm SOURCE & CAPACITOR.
FROM PTT LO SHT. 2
ALTERNATE HI-STAB OVEN 08-05235
FROM SHT 2
SHEET 2
UNLOCK2
CLK_SYN
LATCH2
DATA_SYN
LATCH1
UNLOCK1
TEMP
455IF-A
455IF-B
RF AGC
REF OSC
RF AMP DISABLE
RF AMP/ON
OFF
I²C CLOCK
I²C DATA
ISSUE CHANGE
ISSUE 2: C/R 24474 R64 WAS 470R C148(2n2), R96(1k), V16(BF494) & LINKS 1.6 & RF AMP DISABLE, CRYSTAL OVEN ADDED. NOTES ADDED. REFER SHT 2. NJR 21-2-96
ISSUE 3: C/R 24594 REFER SHT 2. MJS 6-5-96
ISSUE 4: C/R 24883 R54 WAS 330R, R55 & R58 WERE 15k, R251 WAS 22k. 19-2-97 NJR
ISSUE 5 C55 AND C56 WERE 2p2. C/R 25040
FILE NAME 03\04962_5.SCH
PCB 07-01532
ASSY 08-04962-001
CODAN
MATERIAL
FINISH
DRAWN DB 14-12-92
CHKD NJR 20-12-94
APPD NJR 20-12-94
SCALE
TOLERANCES UNLESS OTHERWISE STATED 2 PLACES DEC. ± 1 PLACE DEC. ± ANGULAR ±
TITLE Rx/EXCITER (RF MIXER & SYNTHESISERS)
DRAWING/DOC.NO 04-02972
A1
ISS A A A A 5
SHT 1 OF 2

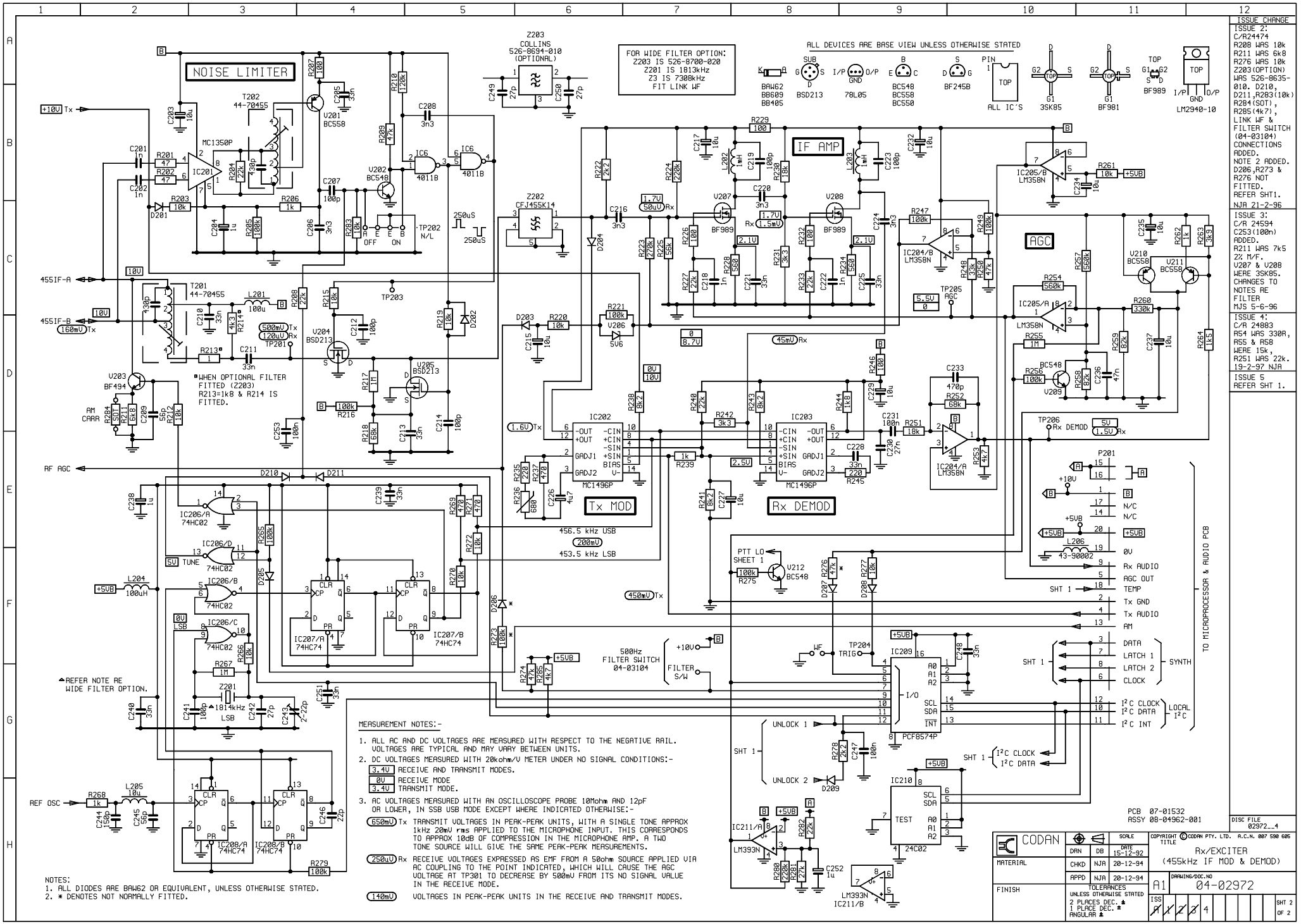
NOISE LIMITER
IF AMP
AGC
Tx MOD
Rx DEMOD
FOR WIDE FILTER OPTION:
Z203 IS 526-8700-020
Z201 IS 1813kHz
Z3 IS 7300kHz
FIT LINK WF
ALL DEVICES ARE BASE VIEW UNLESS OTHERWISE STATED
Z203 COLLINS 526-8694-010 (OPTIONAL)
Z202 CFJ455K14
IC201 MC1350P
IC202 MC1496P
IC203 MC1496P
IC204/A LM358N
IC204/B LM358N
IC205/A LM358N
IC205/B LM358N
IC206/A 74HC02
IC206/B 74HC02
IC206/C 74HC02
IC206/D 74HC02
IC207/A 74HC74
IC207/B 74HC74
IC208/A 74HC74
IC208/B 74HC74
IC209 PCF8574P
IC210 24C02
IC211/A LM393N
IC211/B LM393N
455IF-A
455IF-B
RF AGC
REF OSC
AM CARR
TO MICROPROCESSOR & AUDIO PCB
SYNTH
LOCAL I²C
MEASUREMENT NOTES:-
1. ALL AC AND DC VOLTAGES ARE MEASURED WITH RESPECT TO THE NEGATIVE RAIL. VOLTAGES ARE TYPICAL AND MAY VARY BETWEEN UNITS.
2. DC VOLTAGES MEASURED WITH 20kohm/V METER UNDER NO SIGNAL CONDITIONS:-
3.4V RECEIVE AND TRANSMIT MODES.
0V RECEIVE MODE
3.4V TRANSMIT MODE.
3. AC VOLTAGES MEASURED WITH AN OSCILLOSCOPE PROBE 10Mohm AND 12pF OR LOWER, IN SSB USB MODE EXCEPT WHERE INDICATED OTHERWISE:-
650mV Tx TRANSMIT VOLTAGES IN PEAK-PEAK UNITS, WITH A SINGLE TONE APPROX 1kHz 20mV rms APPLIED TO THE MICROPHONE INPUT. THIS CORRESPONDS TO APPROX 10dB OF COMPRESSION IN THE MICROPHONE AMP. A TWO TONE SOURCE WILL GIVE THE SAME PEAK-PEAK MEASUREMENTS.
250uV Rx RECEIVE VOLTAGES EXPRESSED AS EMF FROM A 50ohm SOURCE APPLIED VIA AC COUPLING TO THE POINT INDICATED, WHICH WILL CAUSE THE AGC VOLTAGE AT TP301 TO DECREASE BY 500mV FROM ITS NO SIGNAL VALUE IN THE RECEIVE MODE.
140mV VOLTAGES IN PEAK-PEAK UNITS IN THE RECEIVE AND TRANSMIT MODES.
NOTES:
1. ALL DIODES ARE BAW62 OR EQUIVALENT, UNLESS OTHERWISE STATED.
2. * DENOTES NOT NORMALLY FITTED.
PCB 07-01532
ASSY 08-04962-001
CODAN
Rx/EXCITER
(455kHz IF MOD & DEMOD)
04-02972
A1
ISSUE CHANGE
ISSUE 2: C/R24474 R208 WAS 10k R211 WAS 6k8 R276 WAS 10k Z203(OPTION) WAS 526-8635-010. D210, D211,R283(10k) R284(SOT), R285(4k7), LINK WF & FILTER SWITCH (04-03104) CONNECTIONS ADDED. NOTE 2 ADDED. D206,R273 & R276 NOT FITTED. REFER SHT1. NJR 21-2-96
ISSUE 3: C/R 24594 C253(100n) ADDED. R211 WAS 7k5 2% M/F. V207 & V208 WERE 3SK85. CHANGES TO NOTES RE FILTER MJS 5-6-96
ISSUE 4: C/R 24883 R54 WAS 330R, R55 & R58 WERE 15k, R251 WAS 22k. 19-2-97 NJR
ISSUE 5 REFER SHT 1.
DISC FILE 02972__4
SHT 2 OF 2

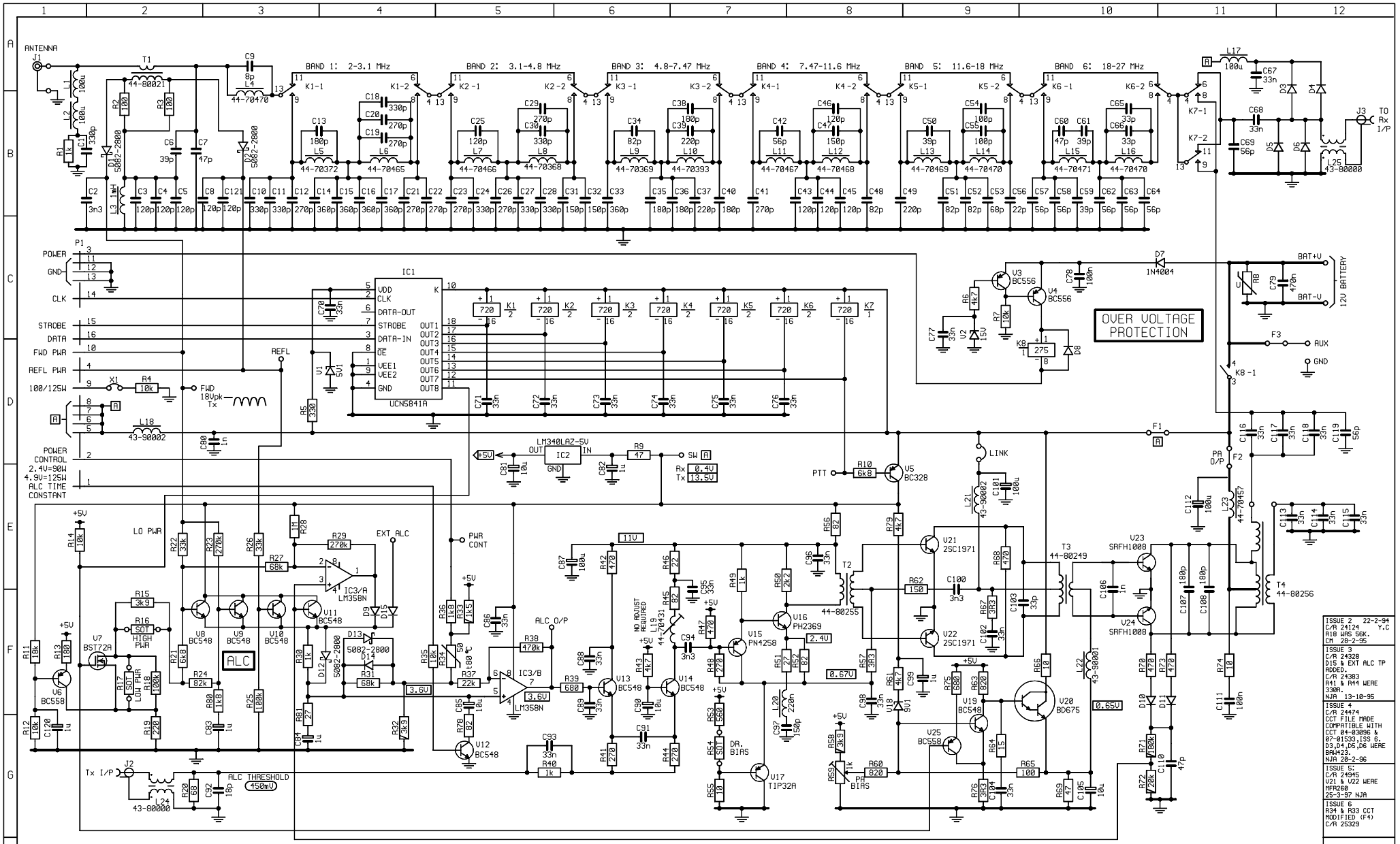
ANTENNA
BAND 1: 2-3.1 MHz
BAND 2: 3.1-4.8 MHz
BAND 3: 4.8-7.47 MHz
BAND 4: 7.47-11.6 MHz
BAND 5: 11.6-18 MHz
BAND 6: 18-27 MHz
TO Rx I/P
POWER
GND
CLK
STROBE
DATA
FWD PWR
REFL PWR
100/125W
POWER CONTROL
2.4V=90W
4.9V=125W
ALC TIME CONSTANT
IC1
UCN5841A
OVER VOLTAGE PROTECTION
BAT+V
BAT-V
12V BATTERY
AUX
GND
PTT
LINK
PA O/P
LO PWR
EXT ALC
PWR CONT
ALC
ALC O/P
HIGH PWR
LOW PWR
DR. BIAS
PA BIAS
Tx I/P
ALC THRESHOLD
450mV
ISSUE 2 22-2-94 C/R 24124 Y.C R18 WAS 56K. CM 28-2-95
ISSUE 3 C/R 24328 D15 & EXT ALC TP ADDED. C/R 24383 R41 & R44 WERE 330R. NJA 13-10-95
ISSUE 4 C/R 24474 CCT FILE MADE COMPATIBLE WITH CCT 04-03896 & 07-01533,ISS 6. D3,D4,D5,D6 WERE BAW423. NJA 20-2-96
ISSUE 5: C/R 24945 V21 & V22 WERE MRF260 25-3-97 NJA
ISSUE 6 R34 & R33 CCT MODIFIED (F4) C/R 25329
FILE NAME 2973_6.SCH
MEASUREMENT NOTES:-
1. ALL VOLTAGES ARE MEASURED WITH RESPECT TO THE CHASSIS. VOLTAGES ARE TYPICAL AND MAY VARY BETWEEN UNITS.
2. DC VOLTAGES SHOWN 3.4V ARE MEASURED WITH A DVM, & ARE IN THE TRANSIT MODE & WITHOUT SIGNALS APPLIED.
3. USE AN EARTH AS CLOSE AS PRACTICABLE TO POINT OF MEASUREMENT. WIND EXCESS PROBE EARTH LEAD AROUND PROBE TO MINIMISE LOOP AREA.
4. ALL MEASUREMENTS ARE MADE WITH A DC SUPPLY OF 13.6V & 100W PEP O/P.
5. DC VOLTAGES SHOWN Tx 3.4V AND WAVEFORMS ARE MEASURED WITH 100W PEP TWO TONE OUTPUT.
ALL DEVICES ARE BASE VIEW UNLESS OTHERWISE STATED
BAW62
BC548
BC558
BC328
PH2369
BC556
BST72A
PN4258
LM340L
LM358
UCN5841
BD675
MRF260
2SC1971
TIP32A
MATCHING LETTER
SRFH1008
(selected MRF455)
CASE=EMITTER
NOTES:
1. DIODES ARE BAW62 OR EQUIVALENT, UNLESS OTHERWISE STATED.
2. RESISTORS SHOWN ARE 2% TOLERANCE.
PCB 07-01533
ASSY 08-04963-001
CODAN
MATERIAL
FINISH
DRAWN APJ 11-8-93
CHKD NJA 20-12-94
APPD NJA 20-12-94
SCALE
DATE
TOLERANCES UNLESS OTHERWISE STATED
2 PLACES DEC. ±
1 PLACE DEC. ±
ANGULAR ±
© CODAN PTY. LTD. A.C.N. 007 590 605, 1994
TITLE
PA & FILTER
A1
DRAWING/DOC.NO
04-02973
ISS 6
SHT 1 OF 1

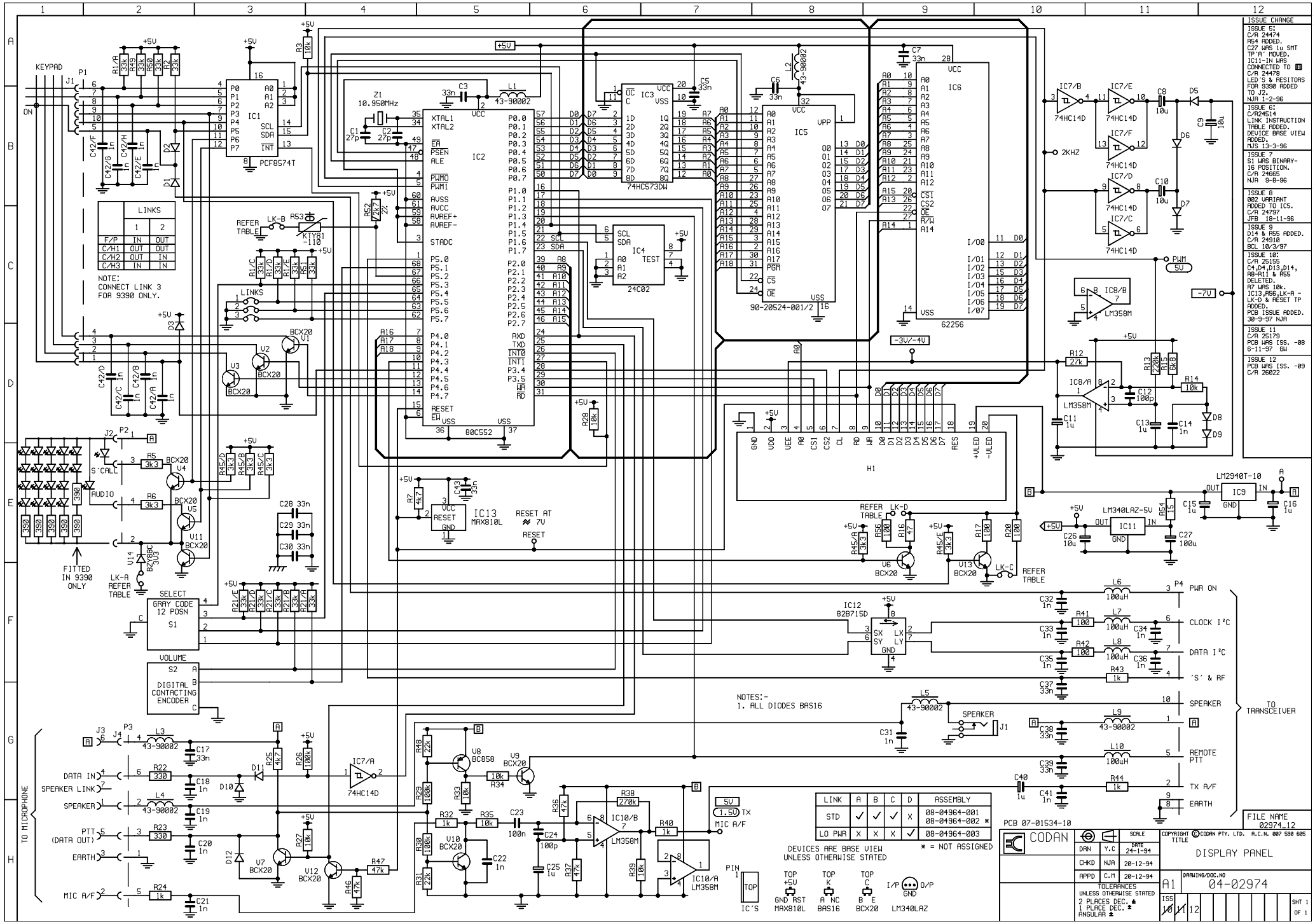
KEYPAD
IC1 PCF8574T
IC2 80C552
Z1 10.950MHz
IC3 74HC573DW
IC4 TEST 24C02
IC5 90-20524-001/2
IC6 62256
IC7/B 74HC14D
IC7/E 74HC14D
IC7/F 74HC14D
IC7/D 74HC14D
IC7/C 74HC14D
IC7/A 74HC14D
IC8/B LM358M
IC8/A LM358M
IC10/B LM358M
IC10/A LM358M
IC9 LM2940T-10
IC11 LM340LAZ-5V
IC12 82B715D
IC13 MAX810L
RESET AT ≈ 7V
H1
S1 GRAY CODE 12 POSN
S2 DIGITAL CONTACTING ENCODER
SPEAKER
TO TRANSCEIVER
PWR ON
CLOCK I²C
DATA I²C
'S' & RF
SPEAKER
REMOTE PTT
TX A/F
EARTH
TO MICROPHONE
DATA IN
SPEAKER LINK
PTT (DATA OUT)
MIC A/F
FITTED IN 9390 ONLY
NOTE: CONNECT LINK 3 FOR 9390 ONLY.
NOTES:- 1. ALL DIODES BAS16
DEVICES ARE BASE VIEW UNLESS OTHERWISE STATED
* = NOT ASSIGNED
PCB 07-01534-10
CODAN
DISPLAY PANEL
04-02974
A1
ISS 1
SHT 1 OF 1
TOLERANCES UNLESS OTHERWISE STATED
2 PLACES DEC. ±
1 PLACE DEC. ±
ANGULAR ±
COPYRIGHT © CODAN PTY. LTD. A.C.N. 007 590 605
FILE NAME 02974_12
ISSUE CHANGE
ISSUE 5: C/A 24474 R54 ADDED. C27 WAS 1u SMT TP'A' MOVED. IC11-IN WAS CONNECTED TO B C/A 24478 LED'S & RESITORS FOR 9390 ADDED TO J2. NJA 1-2-96
ISSUE 6: C/A24514 LINK INSTRUCTION TABLE ADDED. DEVICE BASE VIEW ADDED. NJS 13-3-96
ISSUE 7 S1 WAS BINARY-16 POSITION. C/A 24665 NJA 9-8-96
ISSUE 8 002 VARIANT ADDED TO ICS. C/A 24797 JFB 18-11-96
ISSUE 9 D14 & R55 ADDED. C/A 24910 BCL 10/3/97
ISSUE 10: C/A 25155 C4,D4,D13,D14, R8-R11 & R55 DELETED. R7 WAS 10k. IC13,R56,LK-A - LK-D & RESET TP ADDED. PCB ISSUE ADDED. 30-9-97 NJA
ISSUE 11 C/A 25179 PCB WAS ISS. -08 6-11-97 GW
ISSUE 12 PCB WAS ISS. -09 C/A 26022

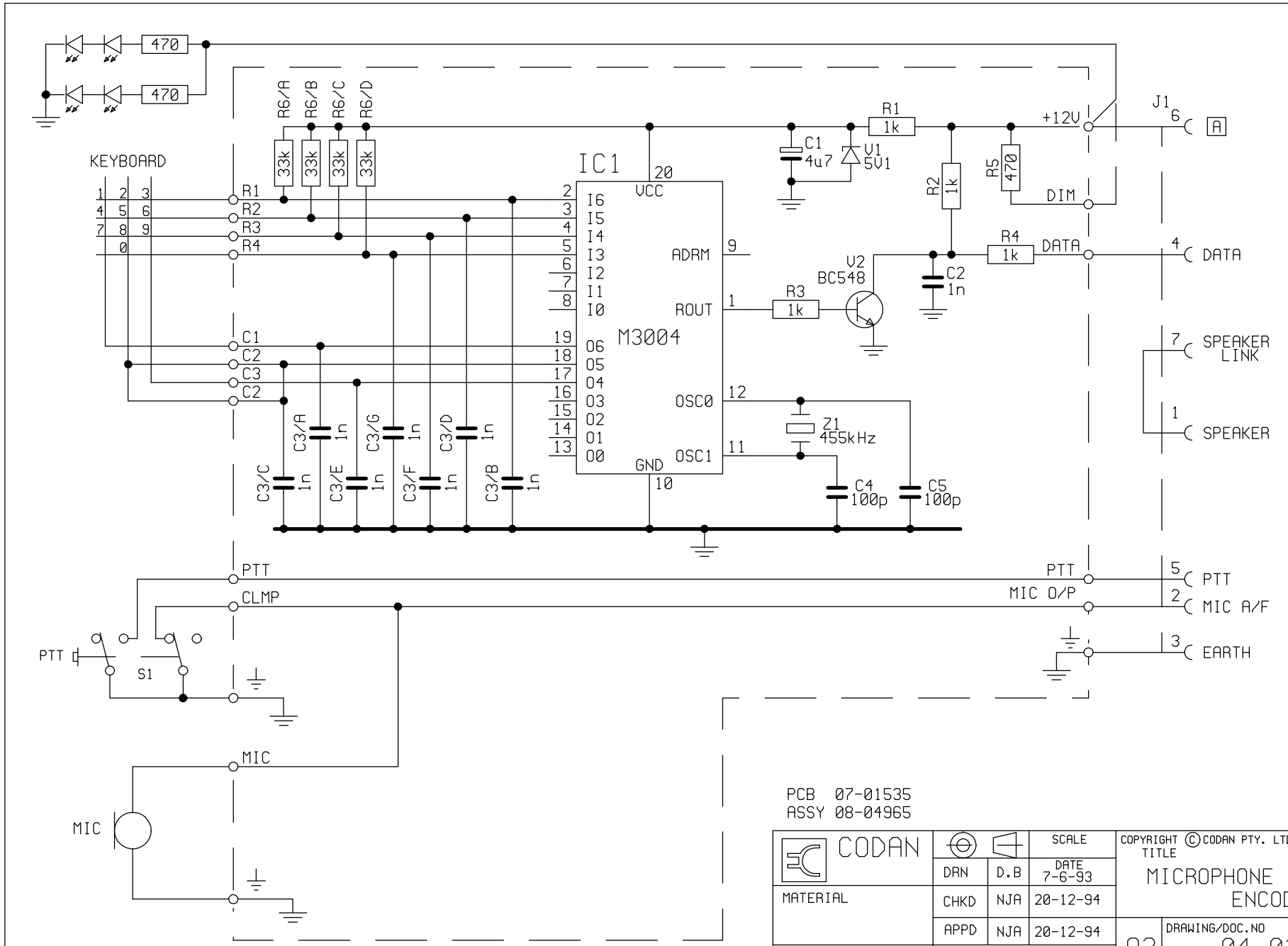

CHANGE REQUEST

ISSUE 2
R6 ADDED
C/R 24300

PCB 07-01535
ASSY 08-04965

DISK FILE
2975_2.SCH

CODAN			SCALE	COPYRIGHT © CODAN PTY. LTD. A.C.N. 007 590 605
	DRN	D.B	DATE 7-6-93	TITLE MICROPHONE & KEYBOARD ENCODER
MATERIAL	CHKD	NJA	20-12-94	
	APPD	NJA	20-12-94	A3 DRAWING/DOC.NO 04-02975
FINISH	TOLERANCES UNLESS OTHERWISE STATED 2 PLACES DEC. ± 1 PLACE DEC. ± ANGULAR ±			ISS ~~A~~ ~~1~~ 2 SHT 1 OF 1

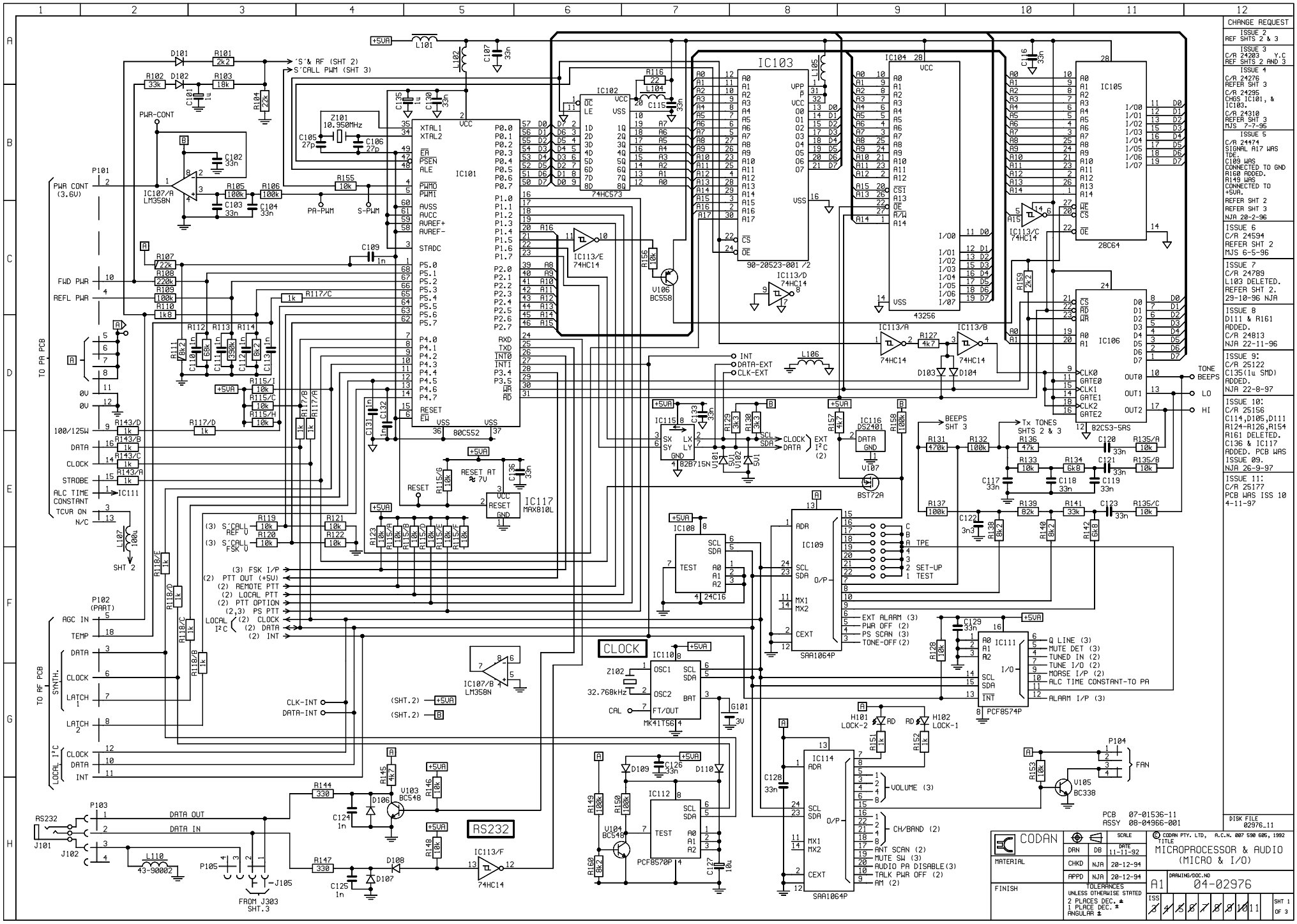
IC101
IC102
IC103
IC104
IC105
IC106
IC107/A LM358N
IC107/B LM358N
IC108
IC109
IC110
IC111
IC112
IC113/A
IC113/B
IC113/C
IC113/D
IC113/E
IC113/F
IC114
IC115
IC116
IC117
MAX810L
74HC573
74HC14
90-20523-001 /2
43256
28C64
82C53-5RS
82B715N
DS2401
BST72A
SAA1064P
24C16
PCF8574P
MK41T56
PCF8570P
BC558
BC548
BC338
LM358N
CLOCK
RS232
TO PA PCB
TO RF PCB
SYNTH.
LOCAL I²C
PWR CONT (3.6V)
FWD PWR
REFL PWR
100/125W
DATA
CLOCK
STROBE
ALC TIME CONSTANT
TCVR ON
N/C
AGC IN
TEMP
LATCH 1
LATCH 2
INT
DATA OUT
DATA IN
FROM J303 SHT.3
TONE BEEPS
LO
HI
FAN
BEEPS SHT 3
Tx TONES SHTS 2 & 3
Q LINE (3)
MUTE DET (3)
TUNED IN (2)
TUNE I/O (2)
MORSE I/P (2)
ALC TIME CONSTANT-TO PA
ALARM I/P (3)
VOLUME (3)
CH/BAND (2)
ANT SCAN (2)
MUTE SW (3)
AUDIO PA DISABLE(3)
TALK PWR OFF (2)
AM (2)
EXT ALARM (3)
PWR OFF (2)
PS SCAN (3)
TONE-OFF (2)
SET-UP
TEST
PCB 07-01536-11
ASSY 08-04966-001
CHANGE REQUEST
ISSUE 2 REF SHTS 2 & 3
ISSUE 3 C/R 24203 Y.C REF SHTS 2 AND 3
ISSUE 4 C/R 24276 REFER SHT 3 C/R 24295 CHGS IC101, & IC103. C/R 24310 REFER SHT 3 MJS 7-7-95
ISSUE 5 C/R 24474 SIGNAL A17 WAS TDE. C105 WAS CONNECTED TO GND A16B ADDED. R149 WAS CONNECTED TO +5VA. REFER SHT 2 REFER SHT 3 NJA 20-2-96
ISSUE 6 C/R 24594 REFER SHT 2 MJS 6-5-96
ISSUE 7 C/R 24789 L103 DELETED. REFER SHT 2. 29-10-96 NJA
ISSUE 8 D111 & R161 ADDED. C/R 24813 NJA 22-11-96
ISSUE 9: C/R 25122 C135(1u SMD) ADDED. NJA 22-8-97
ISSUE 10: C/R 25156 C114,D105,D111 R124-R126,R154 R161 DELETED. C136 & IC117 ADDED. PCB WAS ISSUE 09. NJA 26-9-97
ISSUE 11: C/R 25177 PCB WAS ISS 10 4-11-97
DISK FILE 02976_11
CODAN
MATERIAL
FINISH
DRN DB DATE 11-11-92
CHKD NJA 20-12-94
APPD NJA 20-12-94
TOLERANCES UNLESS OTHERWISE STATED 2 PLACES DEC. ± 1 PLACE DEC. ± ANGULAR ±
SCALE
© CODAN PTY. LTD, A.C.N. 007 590 685, 1992
TITLE MICROPROCESSOR & AUDIO (MICRO & I/O)
A1
DRAWING/DOC.NO 04-02976
ISS 3 4 5 6 7 8 9 10 11
SHT 1 OF 3

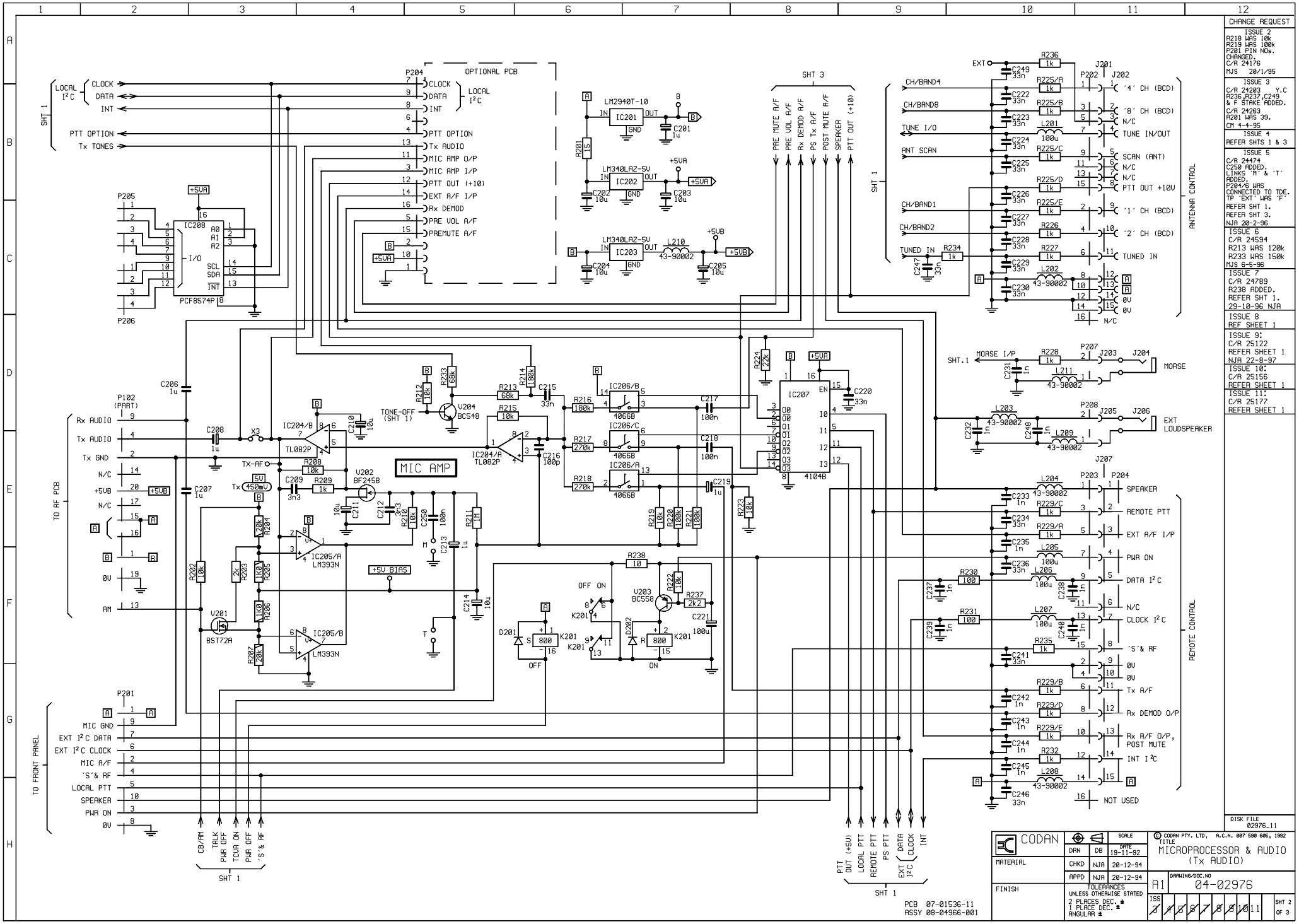
MIC AMP
OPTIONAL PCB
ANTENNA CONTROL
REMOTE CONTROL
TO RF PCB
TO FRONT PANEL
SHT 1
SHT 3
IC204/B TL082P
IC204/A TL082P
IC205/A LM393N
IC205/B LM393N
IC206/B 4066B
IC206/C 4066B
IC206/A 4066B
IC207 4104B
IC208 PCF8574P
IC201 LM2940T-10
IC202 LM340LAZ-5V
IC203 LM340LAZ-5V
V201 BST72A
V202 BF245B
V203 BC558
V204 BC548
K201
D201
D202
TONE-OFF (SHT 1)
TX-AF
+5V BIAS
OFF ON
CHANGE REQUEST
ISSUE 2 R218 WAS 10k R219 WAS 100k P201 PIN NOs. CHANGED. C/R 24176 MJS 20/1/95
ISSUE 3 C/R 24203 Y.C R236,R237,C249 & F STAKE ADDED. C/R 24263 R201 WAS 39. CM 4-4-95
ISSUE 4 REFER SHTS 1 & 3
ISSUE 5 C/R 24474 C250 ADDED. LINKS 'M' & 'T' ADDED. P204/6 WAS CONNECTED TO TDE. TP 'EXT' WAS 'F' REFER SHT 1. REFER SHT 3. NJA 20-2-96
ISSUE 6 C/R 24594 R213 WAS 120k R233 WAS 150k MJS 6-5-96
ISSUE 7 C/R 24789 R238 ADDED. REFER SHT 1. 29-10-96 NJA
ISSUE 8 REF SHEET 1
ISSUE 9: C/R 25122 REFER SHEET 1 NJA 22-8-97
ISSUE 10: C/R 25156 REFER SHEET 1
ISSUE 11: C/R 25177 REFER SHEET 1
DISK FILE 02976_11
CODAN
MATERIAL
FINISH
SCALE
DRN DB DATE 19-11-92
CHKD NJA 20-12-94
APPD NJA 20-12-94
TOLERANCES UNLESS OTHERWISE STATED 2 PLACES DEC. ± 1 PLACE DEC. ± ANGULAR ±
© CODAN PTY. LTD, A.C.N. 007 590 605, 1992
TITLE MICROPROCESSOR & AUDIO (Tx AUDIO)
A1
DRAWING/DOC.NO 04-02976
ISS 3 4 5 6 7 8 9 10 11
SHT 2 OF 3
PCB 07-01536-11
ASSY 08-04966-001

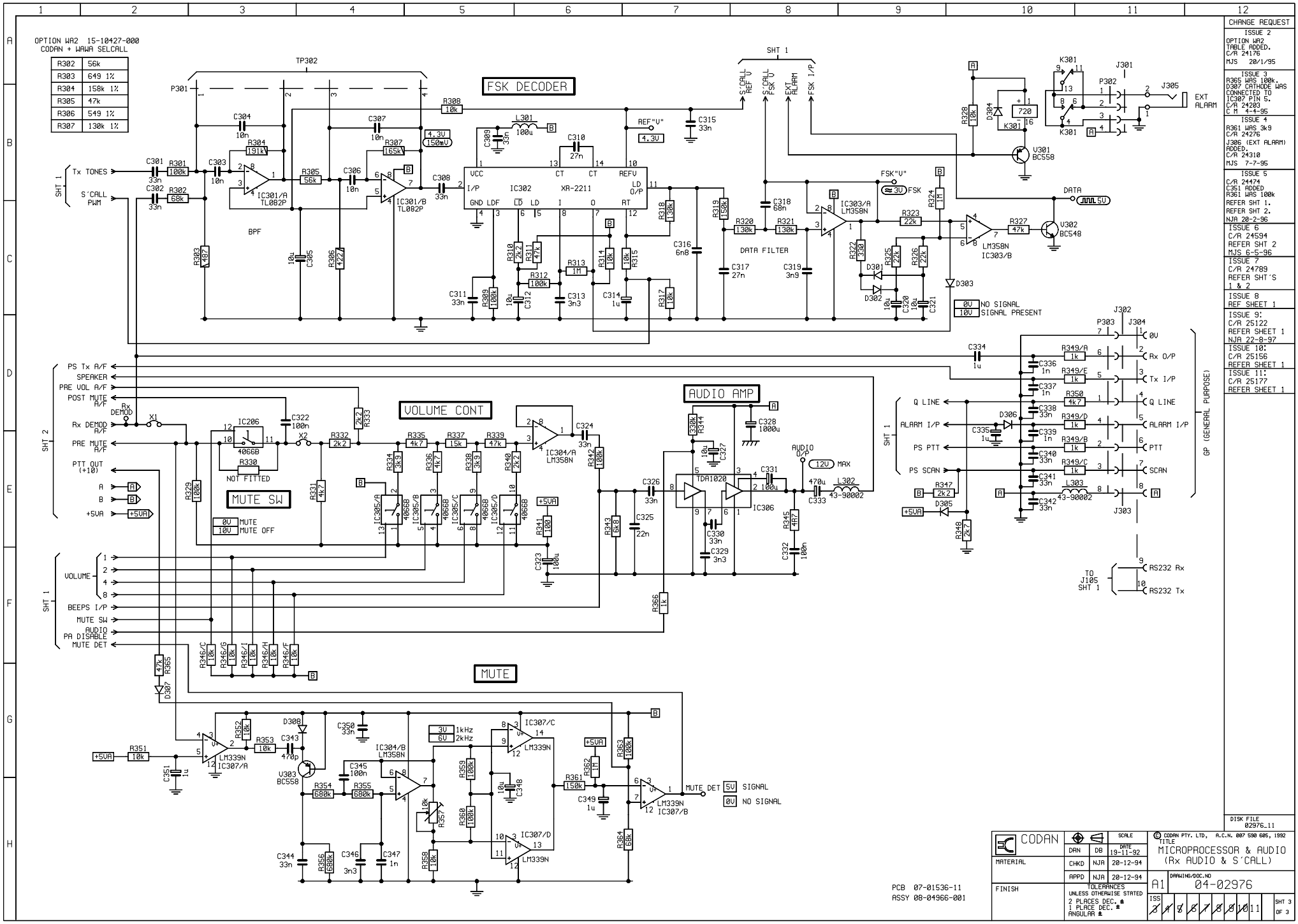
OPTION WA2 15-10427-000
CODAN + WAWA SELCALL
R302 56k
R303 649 1%
R304 158k 1%
R305 47k
R306 549 1%
R307 130k 1%
FSK DECODER
IC302 XR-2211
IC301/A TL082P
IC301/B TL082P
BPF
DATA FILTER
IC303/A LM358N
IC303/B LM358N
DATA
EXT ALARM
VOLUME CONT
AUDIO AMP
MUTE SW
MUTE
TDA1020
IC306
IC304/A LM358N
IC304/B LM358N
IC307/A LM339N
IC307/B LM339N
IC307/C LM339N
IC307/D LM339N
MUTE DET
5V SIGNAL
0V NO SIGNAL
0V MUTE
10V MUTE OFF
0V NO SIGNAL
10V SIGNAL PRESENT
GP (GENERAL PURPOSE)
RS232 Rx
RS232 Tx
PCB 07-01536-11
ASSY 08-04966-001
CODAN
MICROPROCESSOR & AUDIO
(Rx AUDIO & S'CALL)
04-02976
A1
SHT 3 OF 3
DISK FILE 02976_11

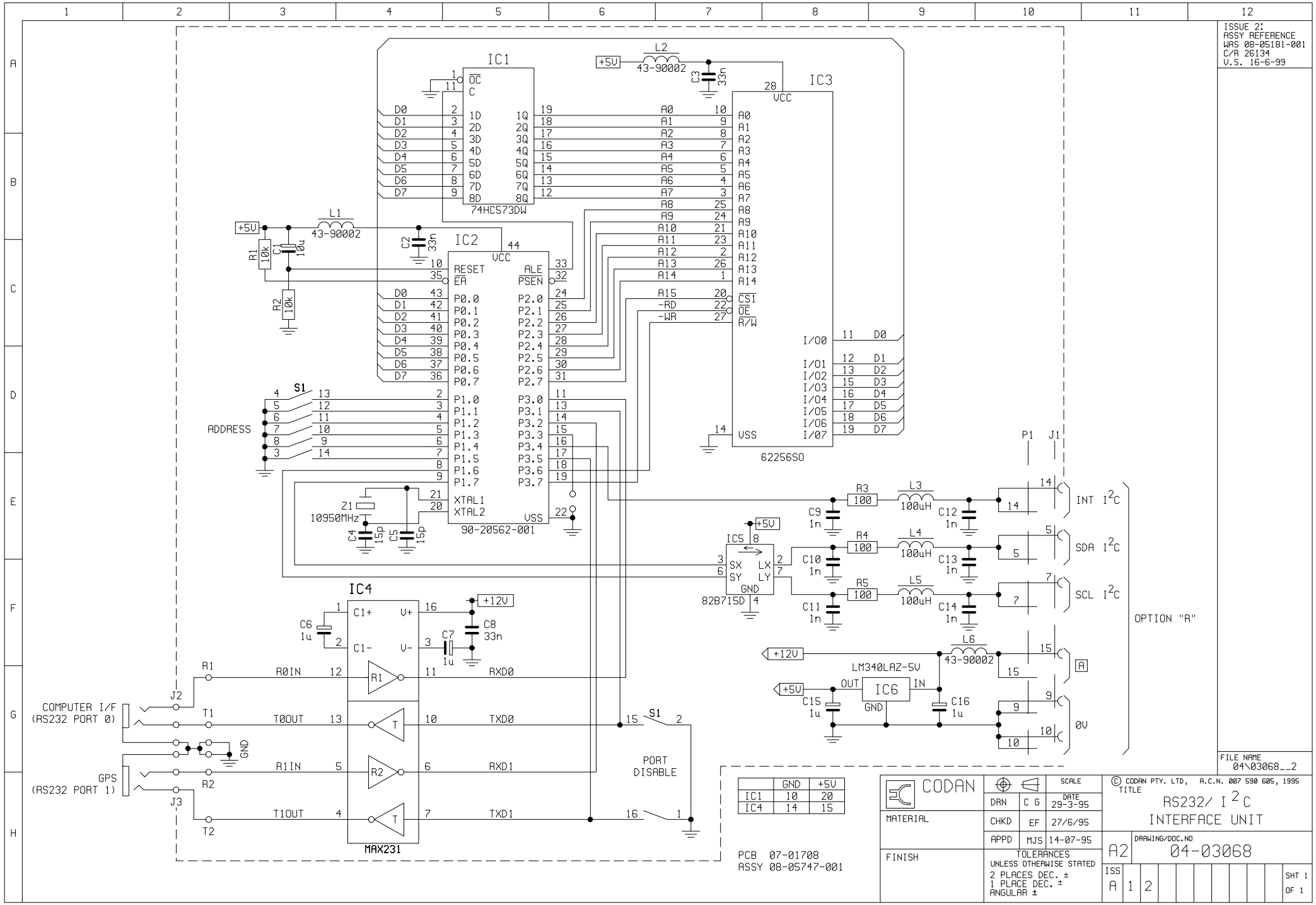

	GND	+5V
IC1	10	20
IC4	14	15

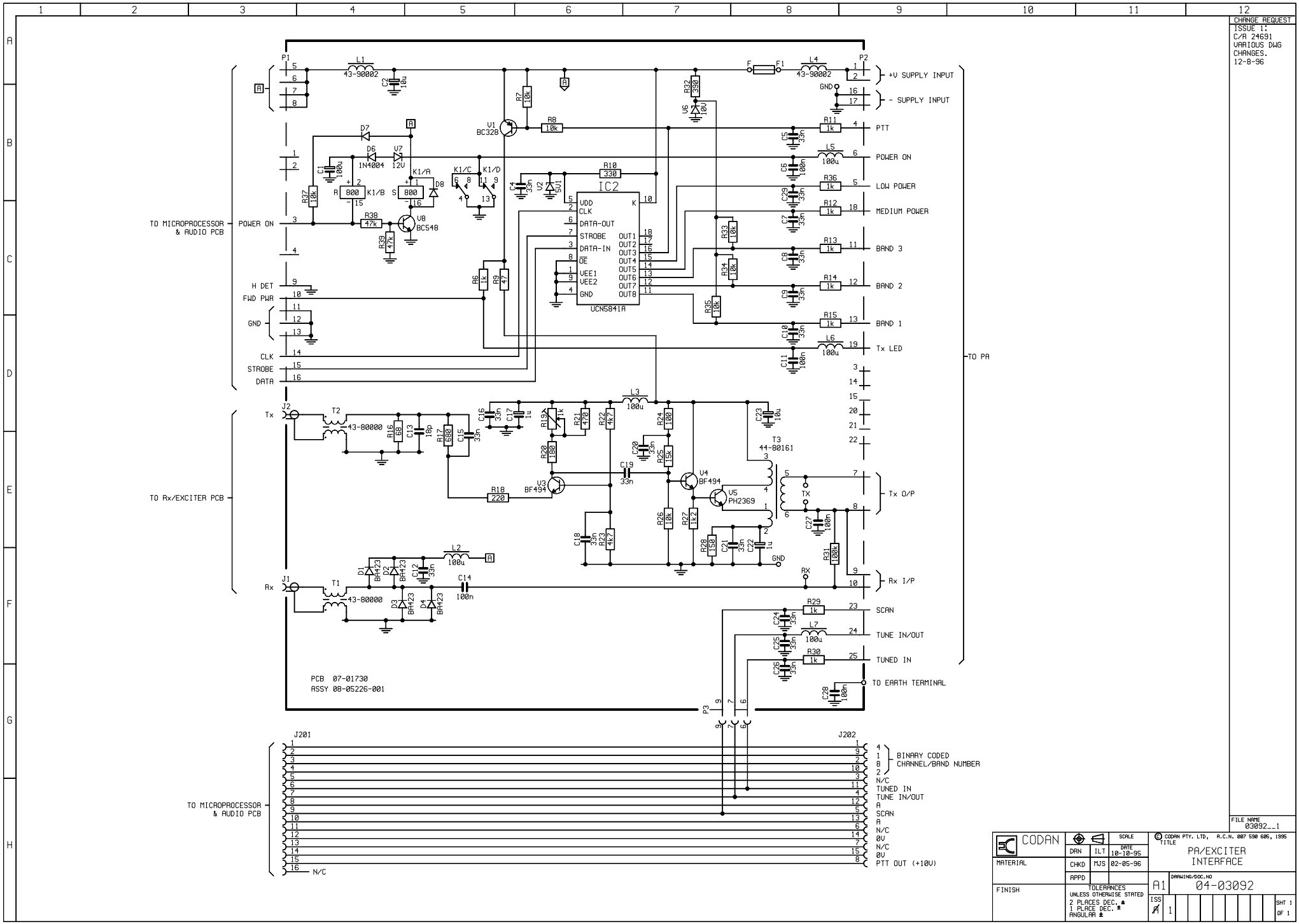
CHANGE REQUEST
ISSUE 1:
C/R 24691
VARIOUS DWG
CHANGES.
12-8-96
+V SUPPLY INPUT
- SUPPLY INPUT
PTT
POWER ON
LOW POWER
MEDIUM POWER
BAND 3
BAND 2
BAND 1
Tx LED
TO PA
TO MICROPROCESSOR & AUDIO PCB
POWER ON
H DET
FWD PWR
GND
CLK
STROBE
DATA
TO Rx/EXCITER PCB
Tx
Rx
Tx O/P
Rx I/P
SCAN
TUNE IN/OUT
TUNED IN
TO EARTH TERMINAL
IC2
UCN5841A
PCB 07-01730
ASSY 08-05226-001
J201
J202
BINARY CODED CHANNEL/BAND NUMBER
N/C
TUNED IN
TUNE IN/OUT
A
SCAN
A
N/C
0V
N/C
0V
PTT OUT (+10V)
FILE NAME
03092__1
CODAN
MATERIAL
FINISH
DRN ILT
CHKD MJS
APPD
SCALE
DATE 10-10-95
02-05-96
TOLERANCES UNLESS OTHERWISE STATED
2 PLACES DEC. ±
1 PLACE DEC. ±
ANGULAR ±
© CODAN PTY. LTD, A.C.N. 007 590 605, 1995
TITLE
PA/EXCITER INTERFACE
DRAWING/DOC.NO
04-03092
A1
ISS 1
SHT 1 OF 1

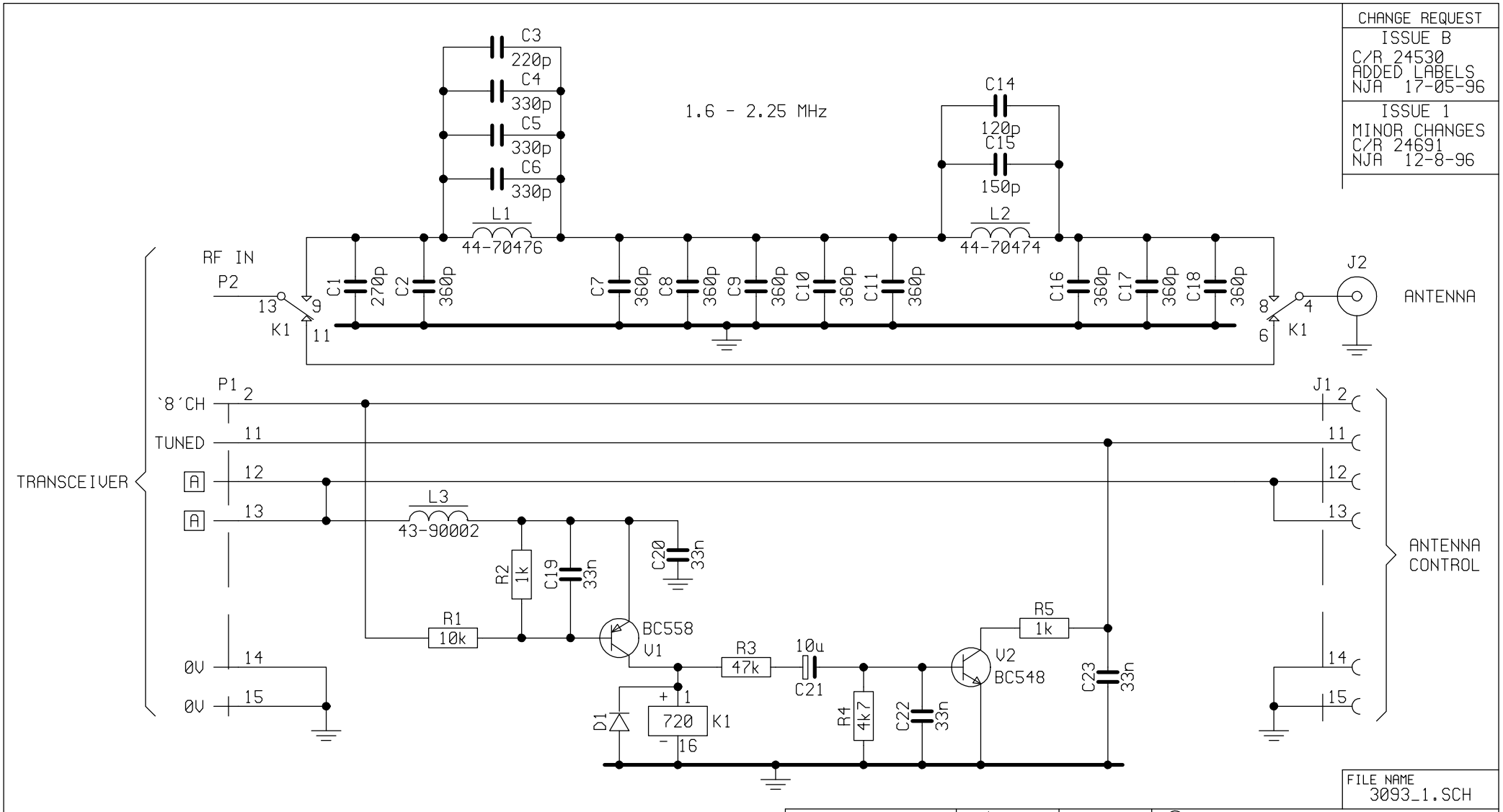

CHANGE REQUEST
ISSUE B C/R 24530 ADDED LABELS NJA 17-05-96
ISSUE 1 MINOR CHANGES C/R 24691 NJA 12-8-96

FILE NAME
3093_1.SCH

NOTE:
ALL PINS FROM P1
CONNECT THROUGH TO J1

ASSY 08-05227-001
PCB 07-01731

CODAN			SCALE	© CODAN PTY. LTD, A.C.N. 007 590 605, 1995 TITLE
	DRN	AML	DATE 26-10-95	FILTER, LOW PASS (1.6MHz)
MATERIAL	CHKD	EF	20-12-95	
	APPD	NJA	12-8-96	A3 DRAWING/DOC.NO 04-03093
FINISH	TOLERANCES UNLESS OTHERWISE STATED 2 PLACES DEC. ± 1 PLACE DEC. ± ANGULAR ±			ISS 1 SHT 1 OF 1

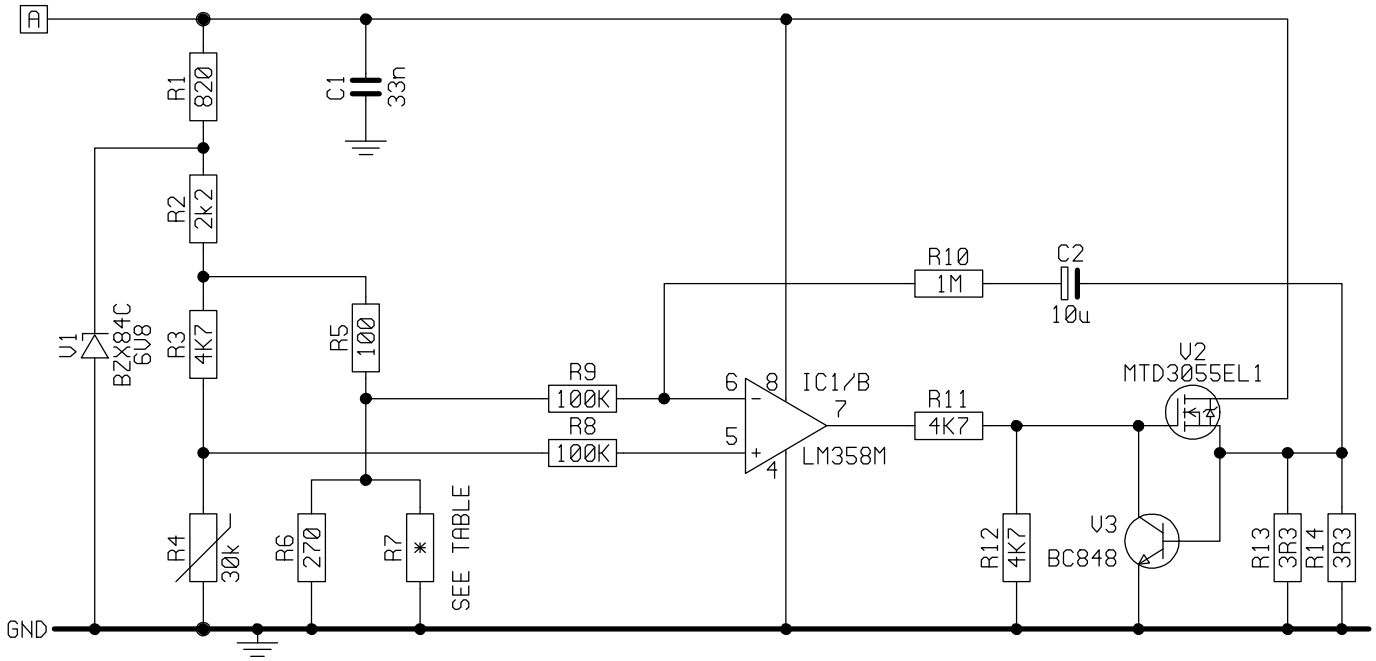

VERSION	R7
08-05235-001	220
08-05235-002	150

ALL DEVICES ARE VIEWED FROM THE TOP

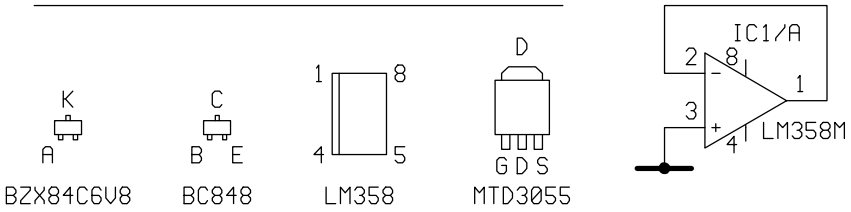

PCB 07-01732-04

CHANGE REQUEST

ISSUE B
V1 WAS BCX20.
NOTE: CHGED.
C/R 24530
22-05-96 NJA

ISSUE 2
R9 WAS 270K
R1 WAS 4K7
R15, V3 ADDED
C/R 24987
04-07-97 MJS

ISSUE 3
RENUMBERED
R3,R8,R9,R10
R11 WERE 1206
R7 WAS 220
TABLE ADDED.
C/R 25721
09-11-98 RRU

ISSUE 4
PCB WAS ISS -03
C/R 26392
GDD 21/12/99

FILE NAME
04\03095__4

CODAN

MATERIAL	DRN	AML	DATE 31-10-95
	CHKD	NJA	08-02-96
	APPD	NJA	04-10-96
FINISH	TOLERANCES UNLESS OTHERWISE STATED 2 PLACES DEC. ± 1 PLACE DEC. ± ANGULAR ±		

SCALE

© CODAN PTY. LTD, A.C.N. 007 590 605, 1995

TITLE
CRYSTAL OVEN

A3

DRAWING/DOC.NO
04-03095

ISS 3 4

SHT 1 OF 1

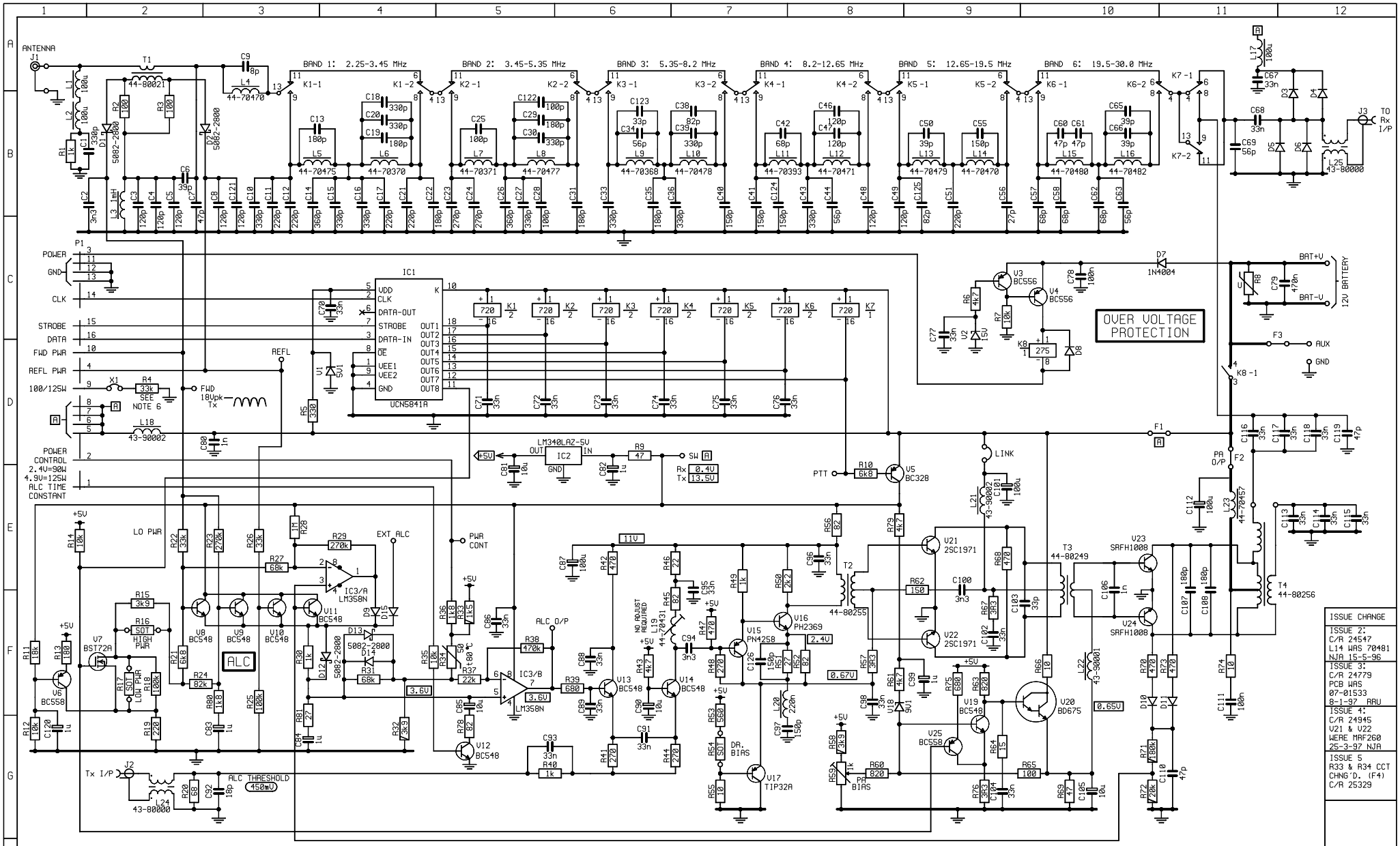
ANTENNA
BAND 1: 2.25-3.45 MHz
BAND 2: 3.45-5.35 MHz
BAND 3: 5.35-8.2 MHz
BAND 4: 8.2-12.65 MHz
BAND 5: 12.65-19.5 MHz
BAND 6: 19.5-30.0 MHz
TO Rx I/P
POWER
GND
CLK
STROBE
DATA
FWD PWR
REFL PWR
100/125W
POWER CONTROL
2.4V=90W
4.9V=125W
ALC TIME CONSTANT
IC1
UCN5841A
OVER VOLTAGE PROTECTION
12V BATTERY
BAT+V
BAT-V
AUX
GND
PTT
LINK
PA O/P
LO PWR
EXT ALC
PWR CONT
ALC
ALC O/P
ALC THRESHOLD
450mV
Tx I/P
DR. BIAS
PA BIAS
SW A
Rx 0.4V
Tx 13.5V
LM340LAZ-5V
IC2
IC3/A LM358N
IC3/B LM358N
HIGH PWR
LOW PWR
NO ADJUST REQUIRED
11V
2.4V
0.67V
0.65V
3.6V
T1 44-80021
T2 44-80255
T3 44-80249
T4 44-80256
L23 44-70457
L24 43-80000
L25 43-80000
L18 43-90002
L21 43-90002
L22 43-90001
L19 44-70431
V21 2SC1971
V22 2SC1971
V23 SRFH1008
V24 SRFH1008
V20 BD675
V17 TIP32A
V16 PH2369
V15 PN4258
V12 BC548
V13 BC548
V14 BC548
V7 BST72A
V5 BC328
V3 BC556
V4 BC556
V25 BC558
V19 BC548
V18 9V1
V2 15V
V1 5V1
D7 1N4004
D8
D12 5082-2800
D13 5082-2800
D14 5082-2800
D1 5082-2800
D2 5082-2800
D9
D10
D11
D3
D4
D5
D6
X1
J1
J2
J3
F1
F2
F3
K1-1
K1-2
K2-1
K2-2
K3-1
K3-2
K4-1
K4-2
K5-1
K5-2
K6-1
K6-2
K7-1
K7-2
K8-1
K8-2
ISSUE CHANGE
ISSUE 2: C/R 24547 L14 WAS 70481 NJA 15-5-96
ISSUE 3: C/R 24779 PCB WAS 07-01533 8-1-97 RRU
ISSUE 4: C/R 24945 V21 & V22 WERE MRF260 25-3-97 NJA
ISSUE 5 R33 & R34 CCT CHNG'D. (F4) C/R 25329
FILE NAME 04\3096_5.SCH
CODAN
DRN C G
CHKD NJA 20-2-96
APPD NJA 20-2-96
MATERIAL
FINISH
SCALE
DATE 1-11-95
TOLERANCES UNLESS OTHERWISE STATED
2 PLACES DEC. ±
1 PLACE DEC. ±
ANGULAR ±
© CODAN PTY. LTD. A.C.N. 007 590 605, 1995
TITLE
PA & FILTER
(30MHz)
DRAWING/DOC.NO
A1 04-03096
ISS 1 2 3 4 5
SHT 1 OF 1
PCB : 07-01778-04
ASSY: 08-05237-001
MEASUREMENT NOTES:-
1. ALL VOLTAGES ARE MEASURED WITH RESPECT TO THE CHASSIS. VOLTAGES ARE TYPICAL AND MAY VARY BETWEEN UNITS.
2. DC VOLTAGES SHOWN 3.4V ARE MEASURED WITH A DVM, & ARE IN THE TRANSIT MODE & WITHOUT SIGNALS APPLIED.
3. USE AN EARTH AS CLOSE AS PRACTICABLE TO POINT OF MEASUREMENT. WIND EXCESS PROBE EARTH LEAD AROUND PROBE TO MINIMISE LOOP AREA.
4. ALL MEASUREMENTS ARE MADE WITH A DC SUPPLY OF 13.6V & 100W PEP O/P.
5. DC VOLTAGES SHOWN Tx 3.4V AND WAVEFORMS ARE MEASURED WITH 100W PEP TWO TONE OUTPUT.
6. FOR 100W CHANGE R4 TO 18k.
ALL DEVICES ARE BASE VIEW UNLESS OTHERWISE STATED
BAW62
BC548
BC558
BC328
PH2369
BC556
BST72A
PN4258
LM340L
LM358
UCN5841
BD675
MRF260
2SC1971
TIP32A
SRFH1008
(selected MRF455)
MATCHING LETTER
CASE=EMITTER
NOTES:
1. DIODES ARE BAW62, OR EQUIVALENT, UNLESS OTHERWISE STATED.
2. RESISTORS SHOWN ARE 2% TOLERANCE.

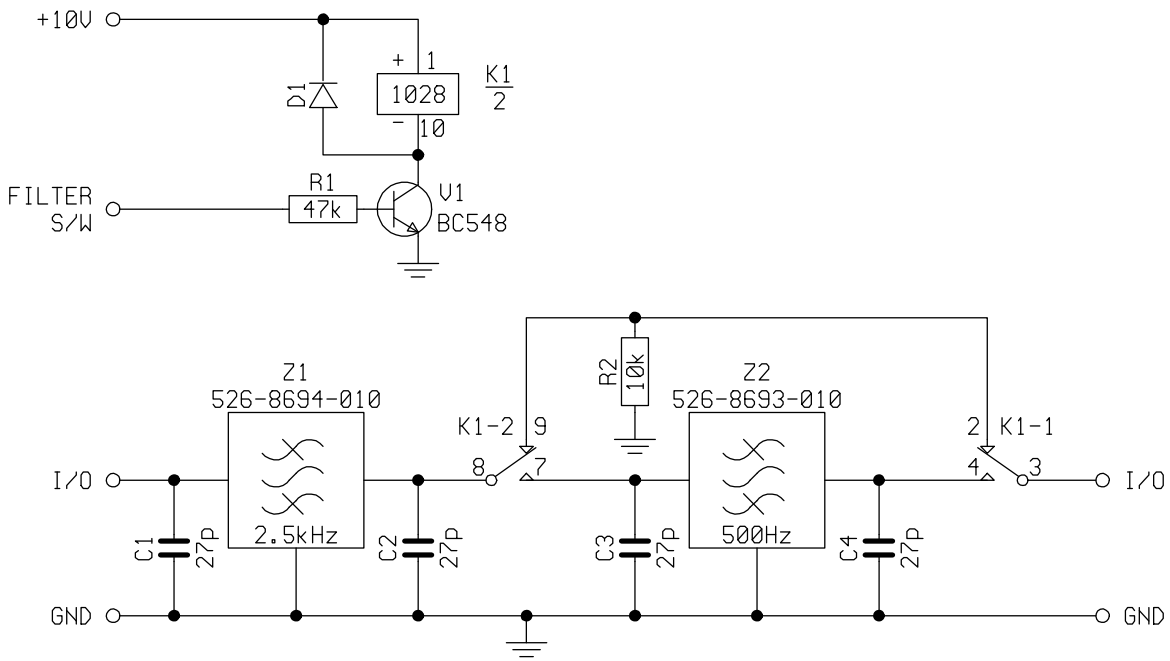

PCB 07-01738
ASSY 08-05259-001

ISSUE CHANGE
ISSUE B: C/R 24510 R1 WAS 10k. NJA 27-2-96

FILE NAME
04\3104_1.SCH

CODAN			SCALE	© CODAN PTY. LTD, A.C.N. 007 590 605, 1996 TITLE
	DRN	C G	DATE 30-1-96	500Hz FILTER SWITCH
MATERIAL	CHKD	NJA	15-2-96	
	APPD	NJA	02-07-97	A3 DRAWING/DOC.NO 04-03104
FINISH	TOLERANCES UNLESS OTHERWISE STATED 2 PLACES DEC. ± 1 PLACE DEC. ± ANGULAR ±			ISS A B 1 SHT 1 OF 1

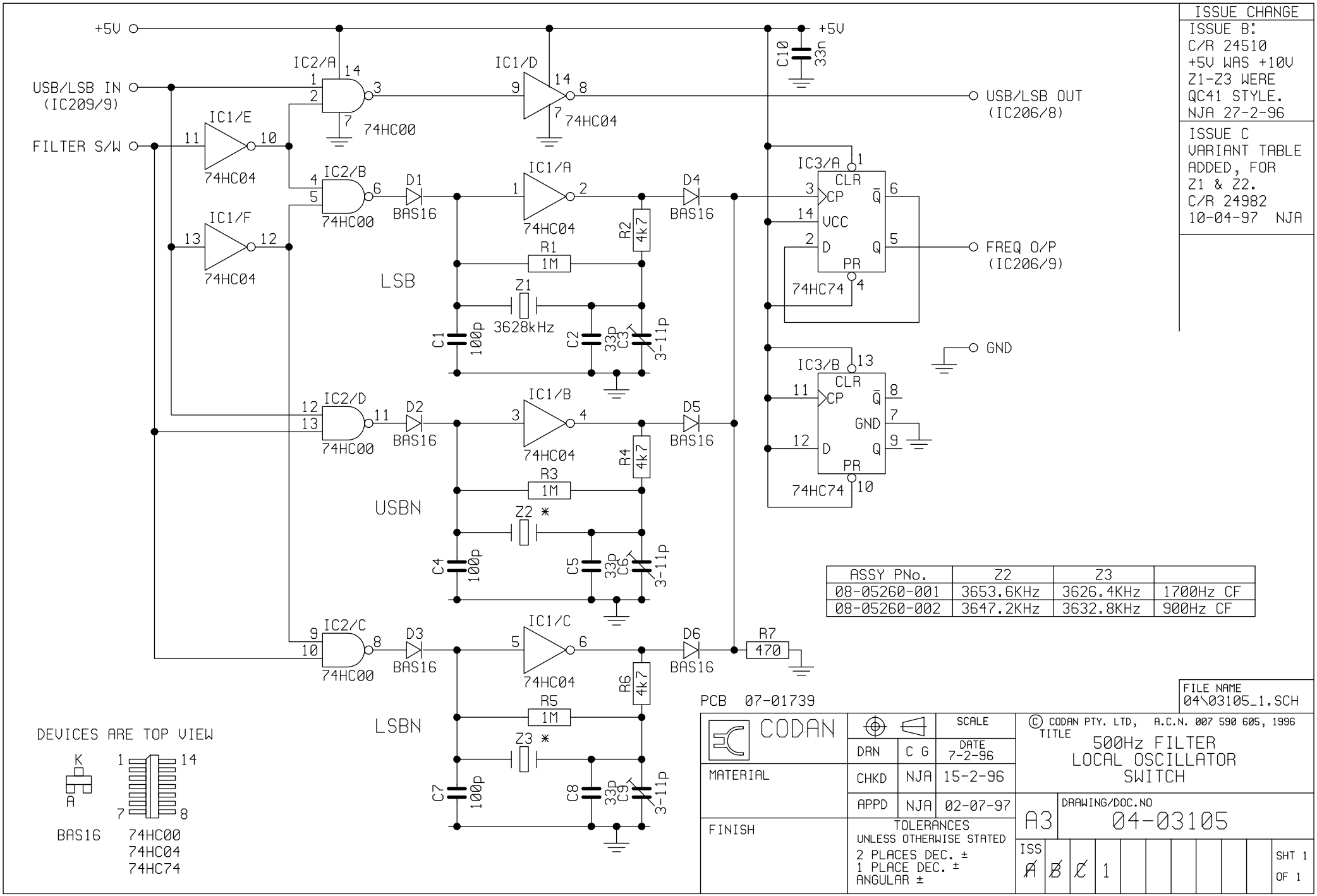

ISSUE CHANGE
ISSUE B: C/R 24510 +5V WAS +10V Z1-Z3 WERE QC41 STYLE. NJA 27-2-96
ISSUE C VARIANT TABLE ADDED, FOR Z1 & Z2. C/R 24982 10-04-97 NJA

ASSY PNo.	Z2	Z3	
08-05260-001	3653.6KHz	3626.4KHz	1700Hz CF
08-05260-002	3647.2KHz	3632.8KHz	900Hz CF

FILE NAME
04\03105_1.SCH

CODAN

		SCALE	
DRN	C G	DATE 7-2-96	
CHKD	NJA	15-2-96	
APPD	NJA	02-07-97	

MATERIAL

FINISH

TOLERANCES
UNLESS OTHERWISE STATED
2 PLACES DEC. ±
1 PLACE DEC. ±
ANGULAR ±

© CODAN PTY. LTD, A.C.N. 007 590 605, 1996

TITLE
500Hz FILTER
LOCAL OSCILLATOR
SWITCH

A3

DRAWING/DOC.NO
04-03105

ISS ~~A~~ ~~B~~ ~~C~~ 1

SHT 1
OF 1

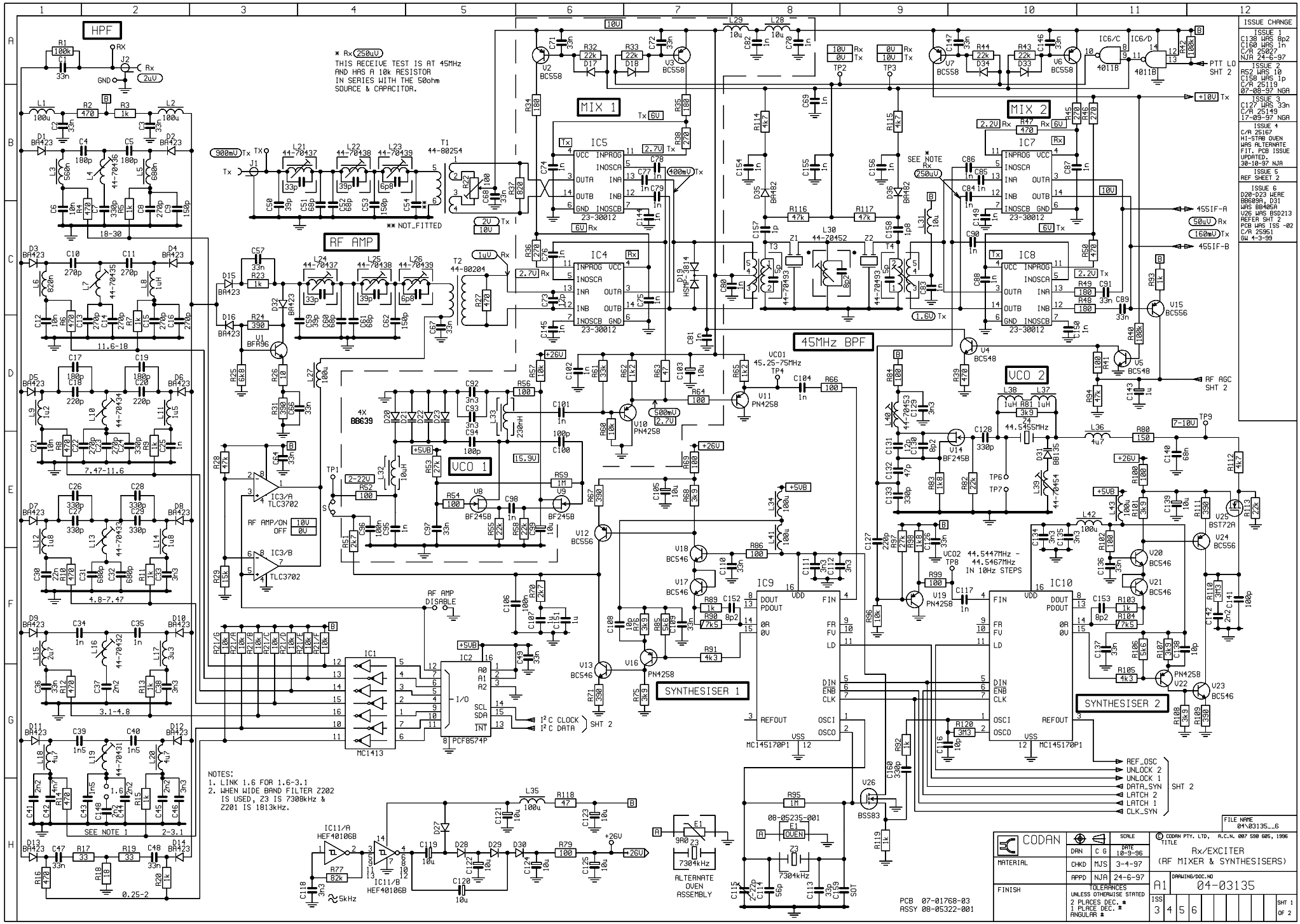
HPF
RF AMP
MIX 1
MIX 2
45MHz BPF
VCO 1
VCO 2
SYNTHESISER 1
SYNTHESISER 2
* Rx 250uV
THIS RECEIVE TEST IS AT 45MHz
AND HAS A 10k RESISTOR
IN SERIES WITH THE 50ohm
SOURCE & CAPACITOR.
** NOT_FITTED
SEE NOTE *
SEE NOTE 1
NOTES:
1. LINK 1.6 FOR 1.6-3.1
2. WHEN WIDE BAND FILTER Z202
IS USED, Z3 IS 7308kHz &
Z201 IS 1813kHz.
ALTERNATE
OVEN
ASSEMBLY
VCO1
45.25-75MHz
VCO2
44.5447MHz -
44.5467MHz
IN 10Hz STEPS
RF AMP/ON
OFF
RF AMP
DISABLE
I²C CLOCK
I²C DATA
SHT 2
PTT LO
SHT 2
RF AGC
SHT 2
455IF-A
455IF-B
REF_OSC
UNLOCK 2
UNLOCK 1
DATA_SYN
LATCH 2
LATCH 1
CLK_SYN
PCB 07-01768-03
ASSY 08-05322-001
ISSUE CHANGE
ISSUE 1
C138 WAS 8p2
C160 WAS 1n
C/R 25027
NJA 24-6-97
ISSUE 2
R52 WAS 10
C158 WAS 1p
C/R 25119
07-08-97 NGA
ISSUE 3
C127 WAS 33n
C/R 25149
17-09-97 NGA
ISSUE 4
C/R 25167
HI-STAB OVEN
WAS ALTERNATE
FIT. PCB ISSUE
UPDATED.
30-10-97 NJA
ISSUE 5
REF SHEET 2
ISSUE 6
D20-D23 WERE
BB639A, D31
WAS BB405A
V26 WAS BSD213
REFER SHT 2
PCB WAS ISS -02
C/R 25951
GW 4-3-99
FILE NAME
04\03135__6
CODAN
SCALE
DAN C G
DATE 10-9-96
MATERIAL
CHKD MJS 3-4-97
APPD NJA 24-6-97
FINISH
TOLERANCES
UNLESS OTHERWISE STATED
2 PLACES DEC. ±
1 PLACE DEC. ±
ANGULAR ±
© CODAN PTY. LTD, A.C.N. 007 590 605, 1996
TITLE
Rx/EXCITER
(RF MIXER & SYNTHESISERS)
A1
DRAWING/DOC.NO
04-03135
ISS 3 4 5 6
SHT 1 OF 2

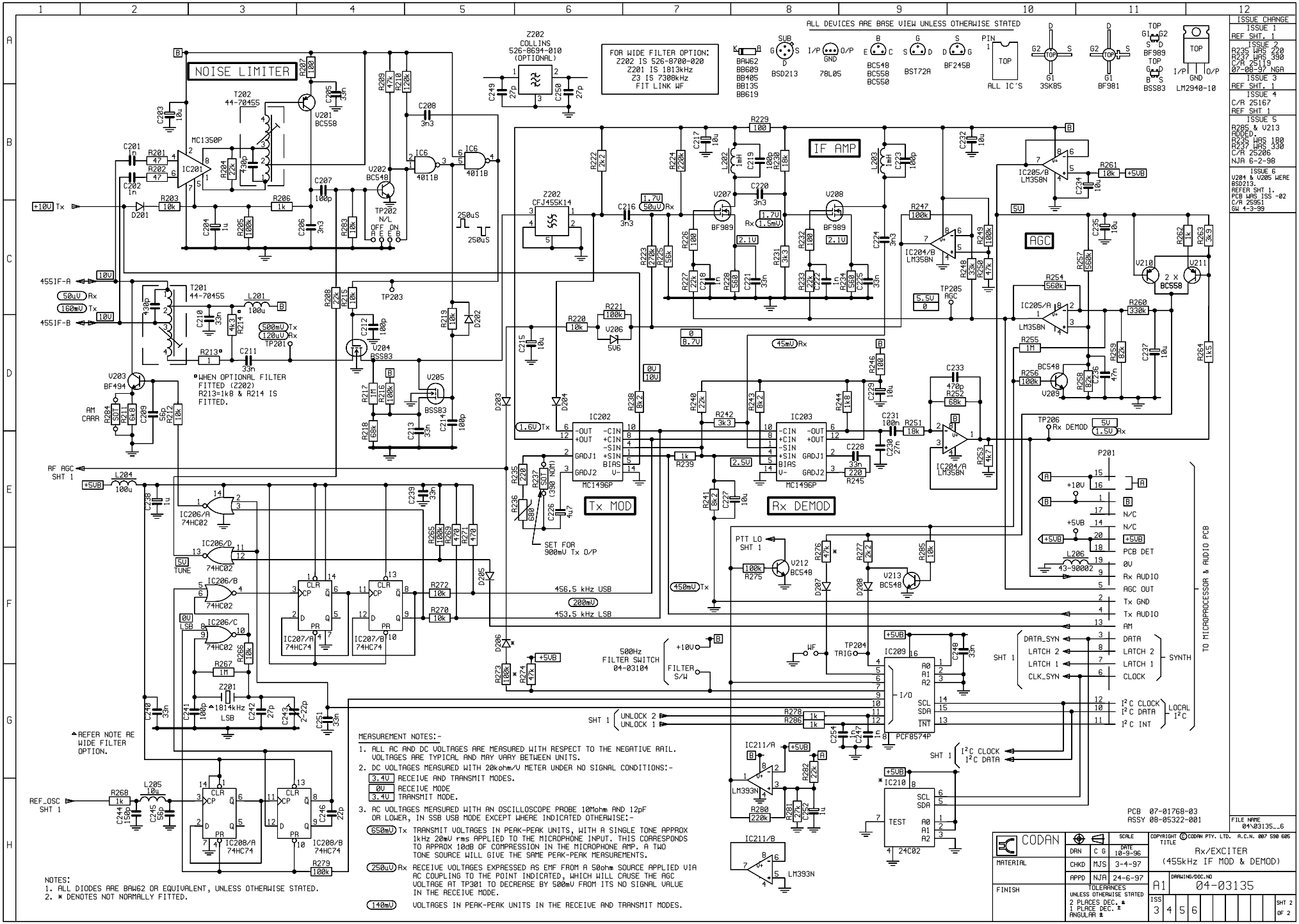

NOTES:
1. ALL DIODES ARE BAW62 OR EQUIVALENT, UNLESS OTHERWISE STATED.
2. * DENOTES NOT NORMALLY FITTED.

MEASUREMENT NOTES:-
1. ALL AC AND DC VOLTAGES ARE MEASURED WITH RESPECT TO THE NEGATIVE RAIL. VOLTAGES ARE TYPICAL AND MAY VARY BETWEEN UNITS.
2. DC VOLTAGES MEASURED WITH 20kohm/V METER UNDER NO SIGNAL CONDITIONS:-
   - 3.4V RECEIVE AND TRANSMIT MODES.
   - 0V RECEIVE MODE
   - 3.4V TRANSMIT MODE.
3. AC VOLTAGES MEASURED WITH AN OSCILLOSCOPE PROBE 10Mohm AND 12pF OR LOWER, IN SSB USB MODE EXCEPT WHERE INDICATED OTHERWISE:-
   - 650mV Tx TRANSMIT VOLTAGES IN PEAK-PEAK UNITS, WITH A SINGLE TONE APPROX 1kHz 20mV rms APPLIED TO THE MICROPHONE INPUT. THIS CORRESPONDS TO APPROX 10dB OF COMPRESSION IN THE MICROPHONE AMP. A TWO TONE SOURCE WILL GIVE THE SAME PEAK-PEAK MEASUREMENTS.
   - 250uV Rx RECEIVE VOLTAGES EXPRESSED AS EMF FROM A 50ohm SOURCE APPLIED VIA AC COUPLING TO THE POINT INDICATED, WHICH WILL CAUSE THE AGC VOLTAGE AT TP301 TO DECREASE BY 500mV FROM ITS NO SIGNAL VALUE IN THE RECEIVE MODE.
   - 140mV VOLTAGES IN PEAK-PEAK UNITS IN THE RECEIVE AND TRANSMIT MODES.

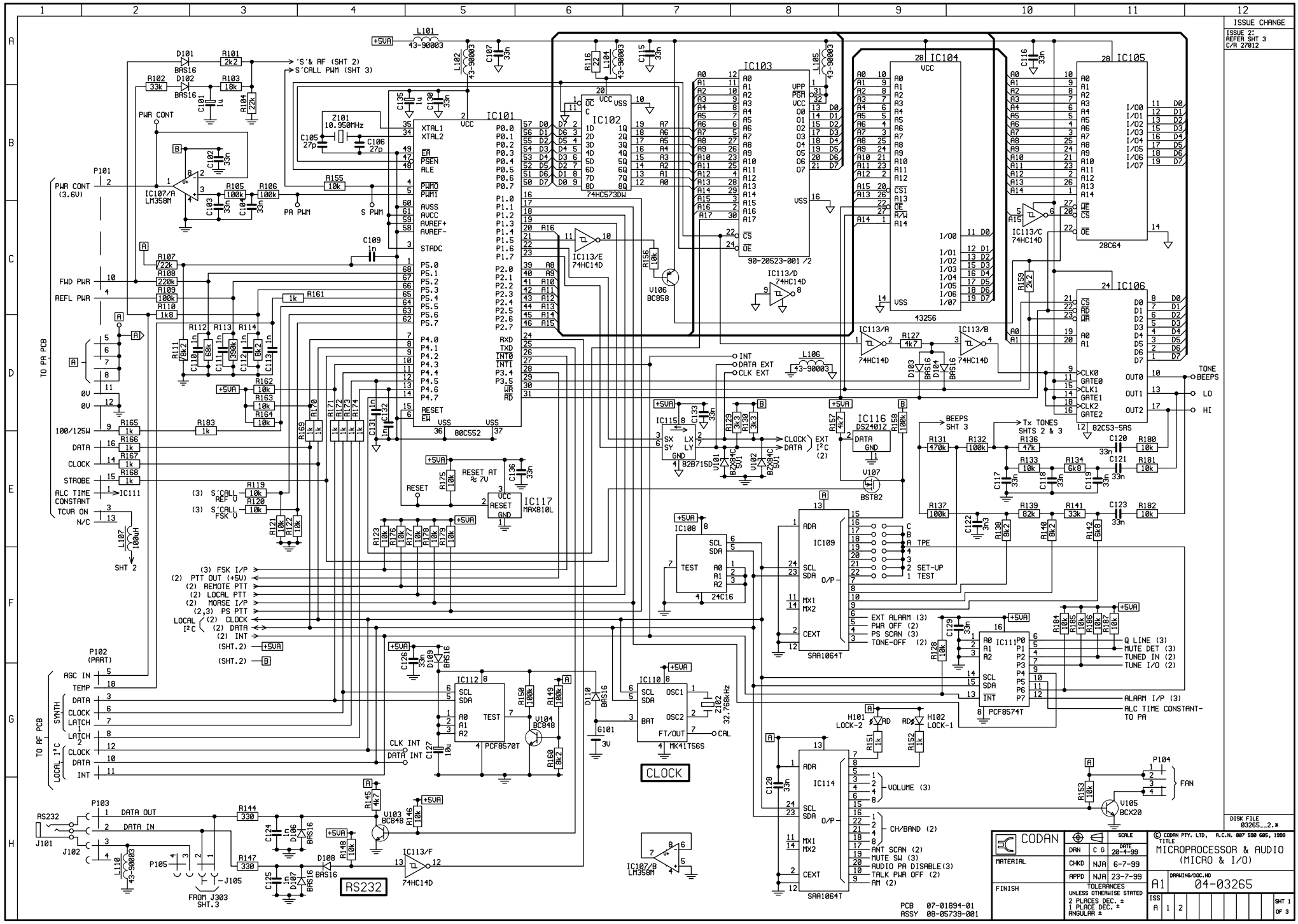
ISSUE CHANGE
ISSUE 2: REFER SHT 3 C/R 27012
IC101
80C552
IC102
74HC573DW
IC103
90-20523-001 /2
IC104
43256
IC105
28C64
IC106
82C53-5RS
IC107/A LM358M
IC107/B LM358M
IC108
24C16
IC109
SAA1064T
IC110
MK41T56S
IC111
PCF8574T
IC112
PCF8570T
IC113/A 74HC14D
IC113/B 74HC14D
IC113/C 74HC14D
IC113/D 74HC14D
IC113/E 74HC14D
IC113/F 74HC14D
IC114
SAA1064T
IC115
82B715D
IC116
DS2401Z
IC117
MAX810L
CLOCK
RS232
PWR CONT (3.6V)
FWD PWR
REFL PWR
TO PA PCB
TO RF PCB
SYNTH
LOCAL I²C
DATA
CLOCK
STROBE
ALC TIME CONSTANT
TCVR ON
N/C
AGC IN
TEMP
LATCH
INT
DATA OUT
DATA IN
FROM J303 SHT.3
S'CALL PWM (SHT 3)
S'& RF (SHT 2)
PA PWM
S PWM
RESET AT ≈ 7V
TONE BEEPS
LO
HI
BEEPS SHT 3
Tx TONES SHTS 2 & 3
EXT ALARM (3)
PWR OFF (2)
PS SCAN (3)
TONE-OFF (2)
SET-UP
TEST
Q LINE (3)
MUTE DET (3)
TUNED IN (2)
TUNE I/O (2)
ALARM I/P (3)
ALC TIME CONSTANT-TO PA
VOLUME (3)
CH/BAND (2)
ANT SCAN (2)
MUTE SW (3)
AUDIO PA DISABLE(3)
TALK PWR OFF (2)
AM (2)
FAN
PCB 07-01894-01
ASSY 08-05739-001
CODAN
MATERIAL
FINISH
DRN C G 20-4-99
CHKD NJA 6-7-99
APPD NJA 23-7-99
TOLERANCES UNLESS OTHERWISE STATED
2 PLACES DEC. ±
1 PLACE DEC. ±
ANGULAR ±
© CODAN PTY. LTD, A.C.N. 007 590 605, 1999
TITLE
MICROPROCESSOR & AUDIO (MICRO & I/O)
A1
DRAWING/DOC.NO 04-03265
ISS A 1 2
SHT 1 OF 3
DISK FILE 03265__2.*

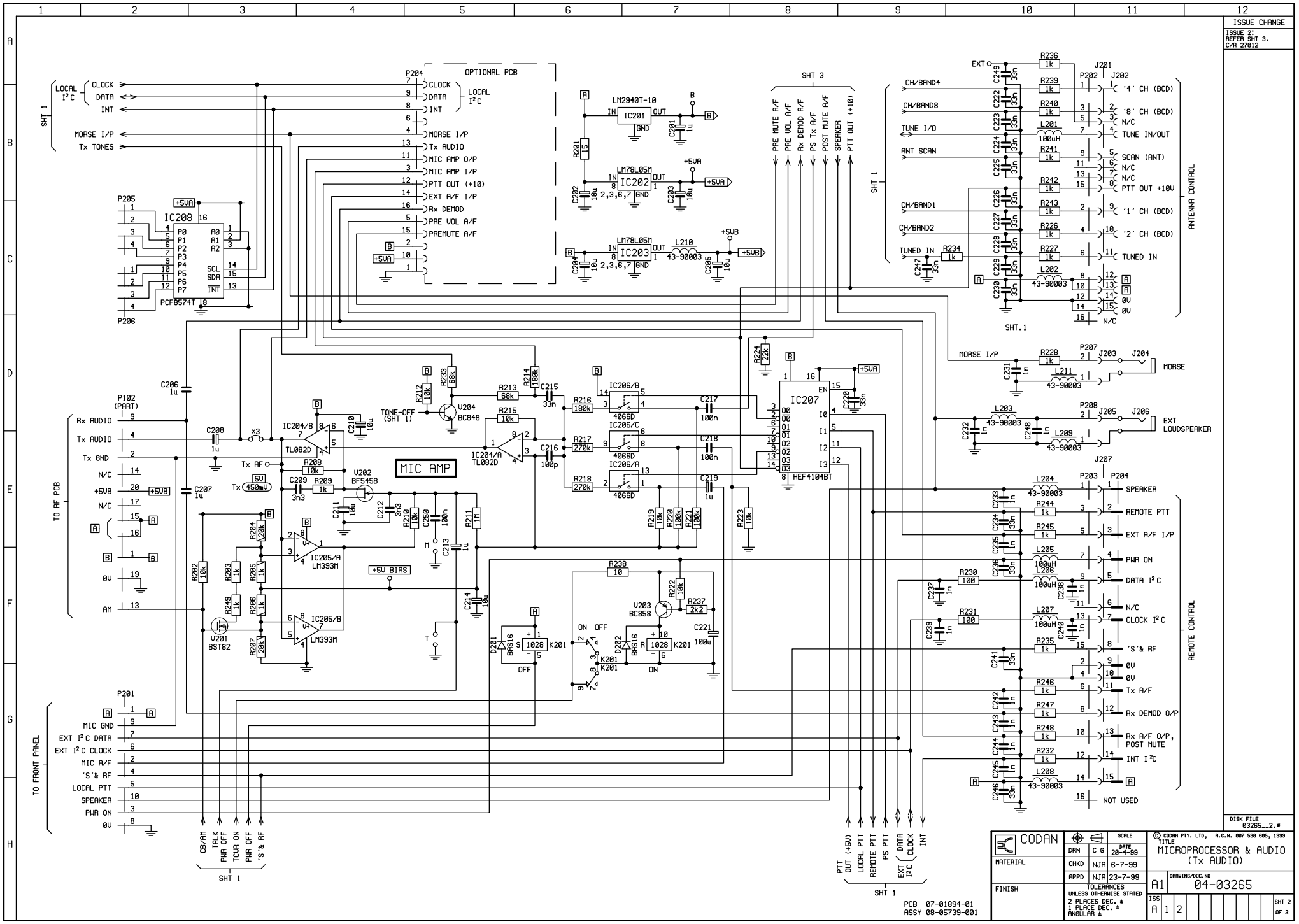
ISSUE CHANGE
ISSUE 2: REFER SHT 3. C/R 27012
OPTIONAL PCB
MIC AMP
ANTENNA CONTROL
REMOTE CONTROL
TO RF PCB
TO FRONT PANEL
IC208 PCF8574T
IC201 LM2940T-10
IC202 LM78L05M
IC203 LM78L05M
IC204/B TL082D
IC204/A TL082D
IC205/A LM393M
IC205/B LM393M
IC206/B 4066D
IC206/C 4066D
IC206/A 4066D
IC207 HEF4104BT
V204 BC848
V202 BF545B
V201 BST82
V203 BC858
D201 BAS16
D202 BAS16
K201 1028
CODAN
MICROPROCESSOR & AUDIO (Tx AUDIO)
DRAWING/DOC.NO 04-03265
DISK FILE 03265__2.*
PCB 07-01894-01
ASSY 08-05739-001
SHT 2 OF 3

OPTION WA2 15-10477-000
CODAN + WAWA SELCALL

R302	56k	5%
R367	180	5%
R304	150k	1%
R368	8k2	5%
R305	47k	5%
R306	470	1%
R369	82	5%
R307	100k	2%
R370	30k	1%

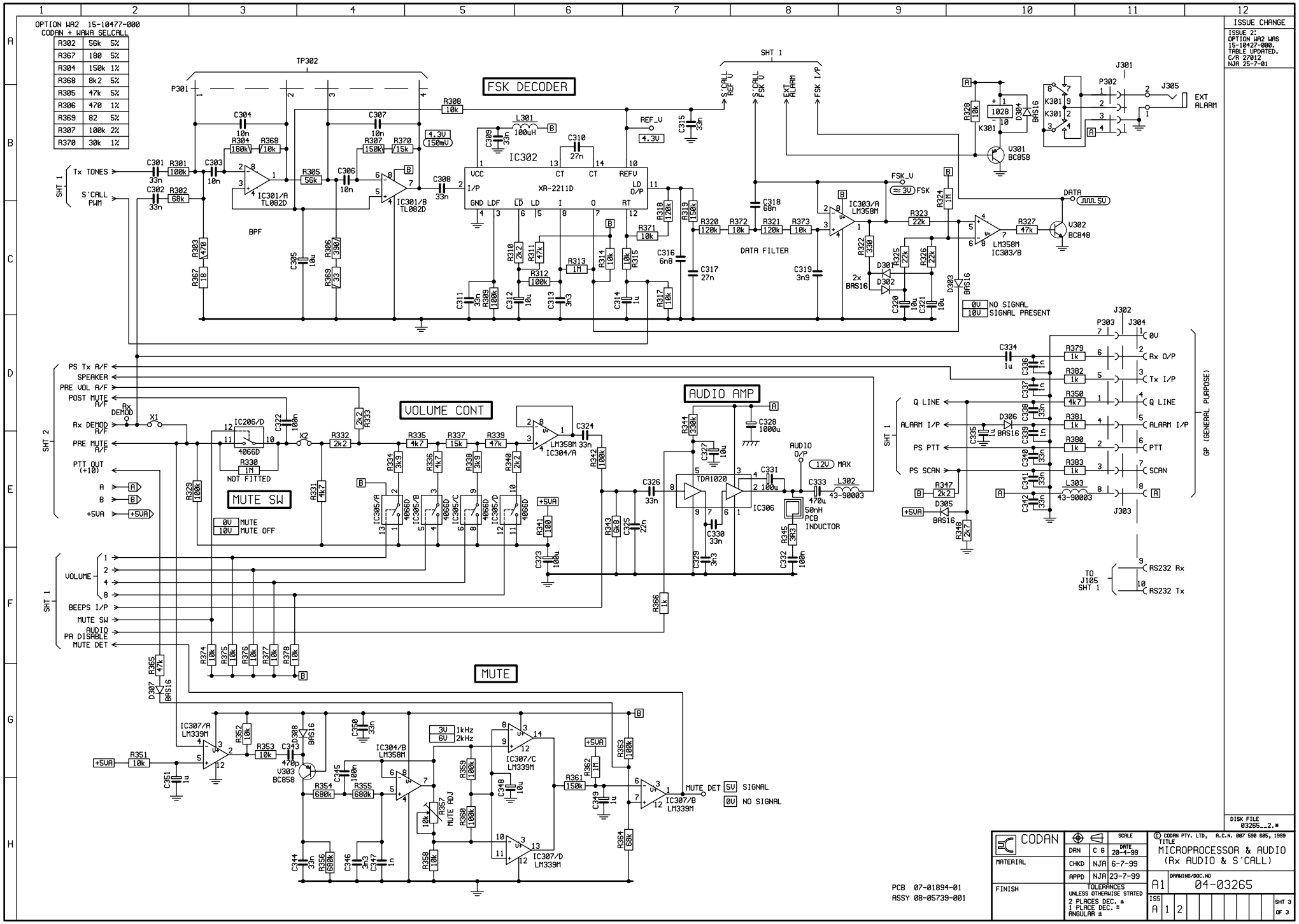

ISSUE CHANGE

ISSUE 2:
OPTION WA2 WAS 15-10427-000.
TABLE UPDATED.
C/R 27012
NJA 25-7-01

DISK FILE 03265__2.*

CODAN

MATERIAL

FINISH

DRN	C G	DATE 20-4-99	SCALE
CHKD	NJA	6-7-99	
APPD	NJA	23-7-99	

TOLERANCES UNLESS OTHERWISE STATED
2 PLACES DEC. ±
1 PLACE DEC. ±
ANGULAR ±

© CODAN PTY. LTD, A.C.N. 007 590 685, 1999

TITLE
MICROPROCESSOR & AUDIO
(Rx AUDIO & S'CALL)

A1 DRAWING/DOC.NO 04-03265

ISS A 1 2

SHT 3 OF 3

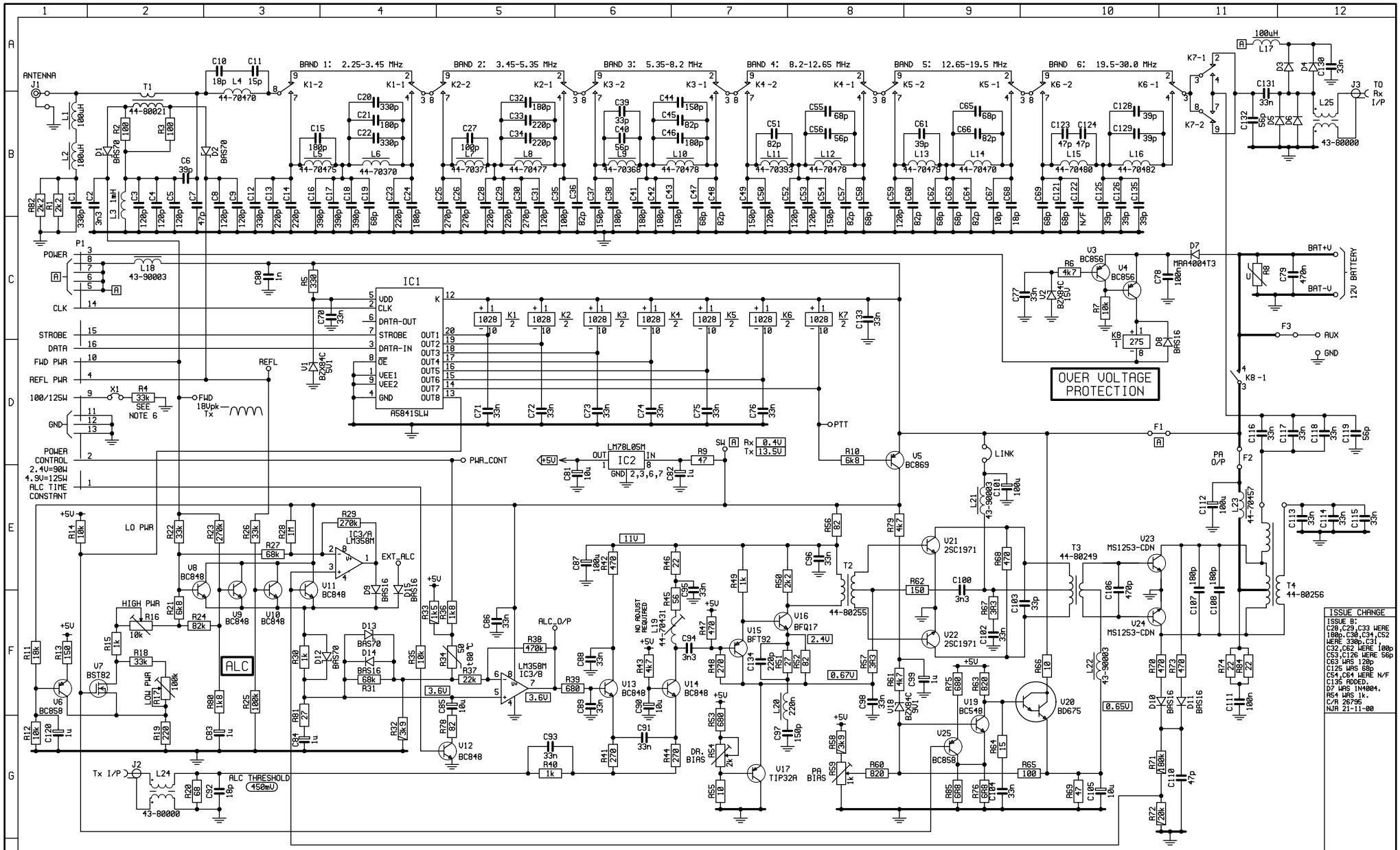

ISSUE CHANGE

ISSUE B:
C28,C29,C33 WERE 180p.C30,C34,C52 WERE 330p.C31, C32,C62 WERE 100p C53,C126 WERE 56p C63 WAS 120p C125 WAS 68p C54,C64 WERE N/F C135 ADDED. D7 WAS 1N4004. R54 WAS 1k. C/R 26795 NJR 21-11-00

FILE NAME 04\03268_B

MEASUREMENT NOTES:-

1. ALL VOLTAGES ARE MEASURED WITH RESPECT TO THE CHASSIS. VOLTAGES ARE TYPICAL AND MAY VARY BETWEEN UNITS.
2. DC VOLTAGES SHOWN 3.4V ARE MEASURED WITH A DVM, & ARE IN THE TRANSIT MODE & WITHOUT SIGNALS APPLIED.
3. USE AN EARTH AS CLOSE AS PRACTICABLE TO POINT OF MEASUREMENT. WIND EXCESS PROBE EARTH LEAD AROUND PROBE TO MINIMISE LOOP AREA.
4. ALL MEASUREMENTS ARE MADE WITH A DC SUPPLY OF 13.6V & 100W PEP O/P.
5. DC VOLTAGES SHOWN Tx 3.4V AND WAVEFORMS ARE MEASURED WITH 100W PEP TWO TONE OUTPUT.
6. FOR 100W CHANGE R4 TO 18k.

ALL DEVICES ARE SHOWN TOP VIEW

K: A NC — BAS16, BAS70, BZX84C
G: S D — J310, BF545B
C: B E — BFT92, BFR92A, BC846, BC848, BC856, BC858
BCE — BC869, BFQ17
PIN 1 — ALL I/C'S
E C B — BD675
CASE=EMITTER: B E C — 2SC1971; B C E — TIP32A
MATCHING LETTER: C, E, H, E, B — MS1253-CDN
K A — MRA4001T3

NOTES:
1. DIODES ARE BAS16, OR EQUIVALENT, UNLESS OTHERWISE STATED.
2. RESISTORS SHOWN ▭ ARE 1% TOLERANCE.

PCB : 07-01896-02
ASSY: 08-05749-002

CODAN	SCALE	© CODAN PTY. LTD, A.C.N. 007 590 685, 1999 TITLE	
MATERIAL	DRN C G / DATE 14-5-99	PA & FILTER (30MHz)	
	CHKD NJA 31-8-00		
	APPD		
FINISH	TOLERANCES UNLESS OTHERWISE STATED 2 PLACES DEC. ± 1 PLACE DEC. ± ANGULAR ±	A1 DRAWING/DOC.NO 04-03268	ISS B / SHT 1 OF 1

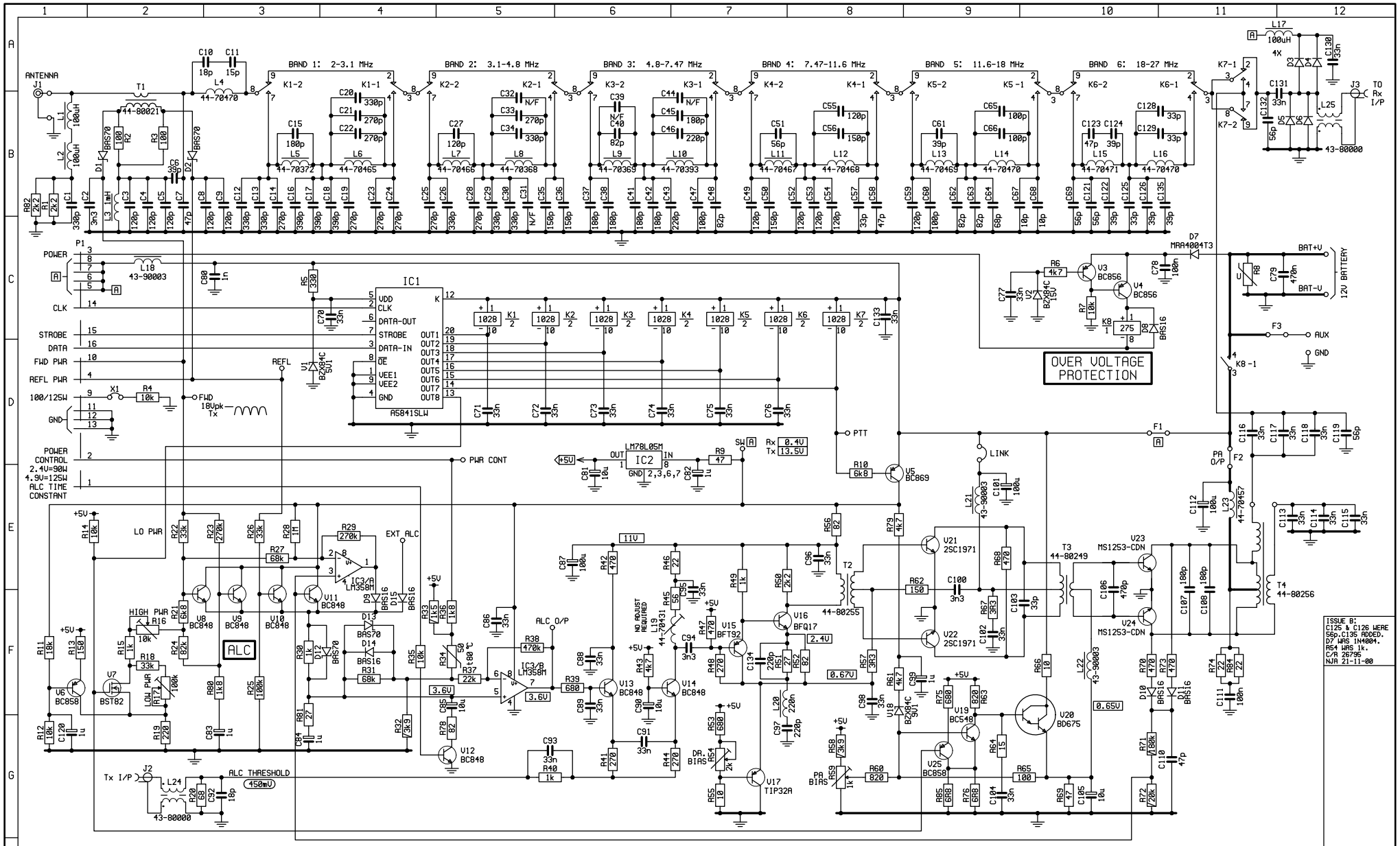

MEASUREMENT NOTES:-

1. ALL VOLTAGES ARE MEASURED WITH RESPECT TO THE CHASSIS. VOLTAGES ARE TYPICAL AND MAY VARY BETWEEN UNITS.
2. DC VOLTAGES SHOWN 3.4V ARE MEASURED WITH A DVM, & ARE IN THE TRANSIT MODE & WITHOUT SIGNALS APPLIED.
3. USE AN EARTH AS CLOSE AS PRACTICABLE TO POINT OF MEASUREMENT. WIND EXCESS PROBE EARTH LEAD AROUND PROBE TO MINIMISE LOOP AREA.
4. ALL MEASUREMENTS ARE MADE WITH A DC SUPPLY OF 13.6V & 100W PEP O/P.
5. DC VOLTAGES SHOWN Tx 3.4V AND WAVEFORMS ARE MEASURED WITH 100W PEP TWO TONE OUTPUT.

ALL DEVICES ARE SHOWN TOP VIEW

K: A NC — BAS16, BAS70, BZX84C
G: S D — J310, BF545B
C: B E — BFT92, BFR92A, BC846, BC848, BC856, BC858
BCE — BC869, BFQ17
PIN 1 — ALL I/C'S
E C B — BD675
CASE=EMITTER: B E C — 2SC1971; B C E — TIP32A
MATCHING LETTER — MS1253-CDN
K A — MRA4001T3

NOTES:
1. DIODES ARE BAS16, OR EQUIVALENT, UNLESS OTHERWISE STATED.
2. RESISTORS SHOWN ARE 1% TOLERANCE.

ISSUE B: C125 & C126 WERE 56p.C135 ADDED. D7 WAS 1N4004. R54 WAS 1k. C/R 26795 NJA 21-11-00

FILE NAME 03269__B

PCB 07-01896-02
ASSY 08-05749-001

CODAN	DRN C G	SCALE	© CODAN PTY. LTD, A.C.N. 007 590 685, 1999 TITLE
MATERIAL	CHKD NJA	DATE 19-5-99 31-8-00	PA & FILTER (26.5MHz)
FINISH	APPD	TOLERANCES UNLESS OTHERWISE STATED 2 PLACES DEC. ± 1 PLACE DEC. ± ANGULAR ±	A1 DRAWING/DOC.NO 04-03269
			ISS B SHT 1 OF 1

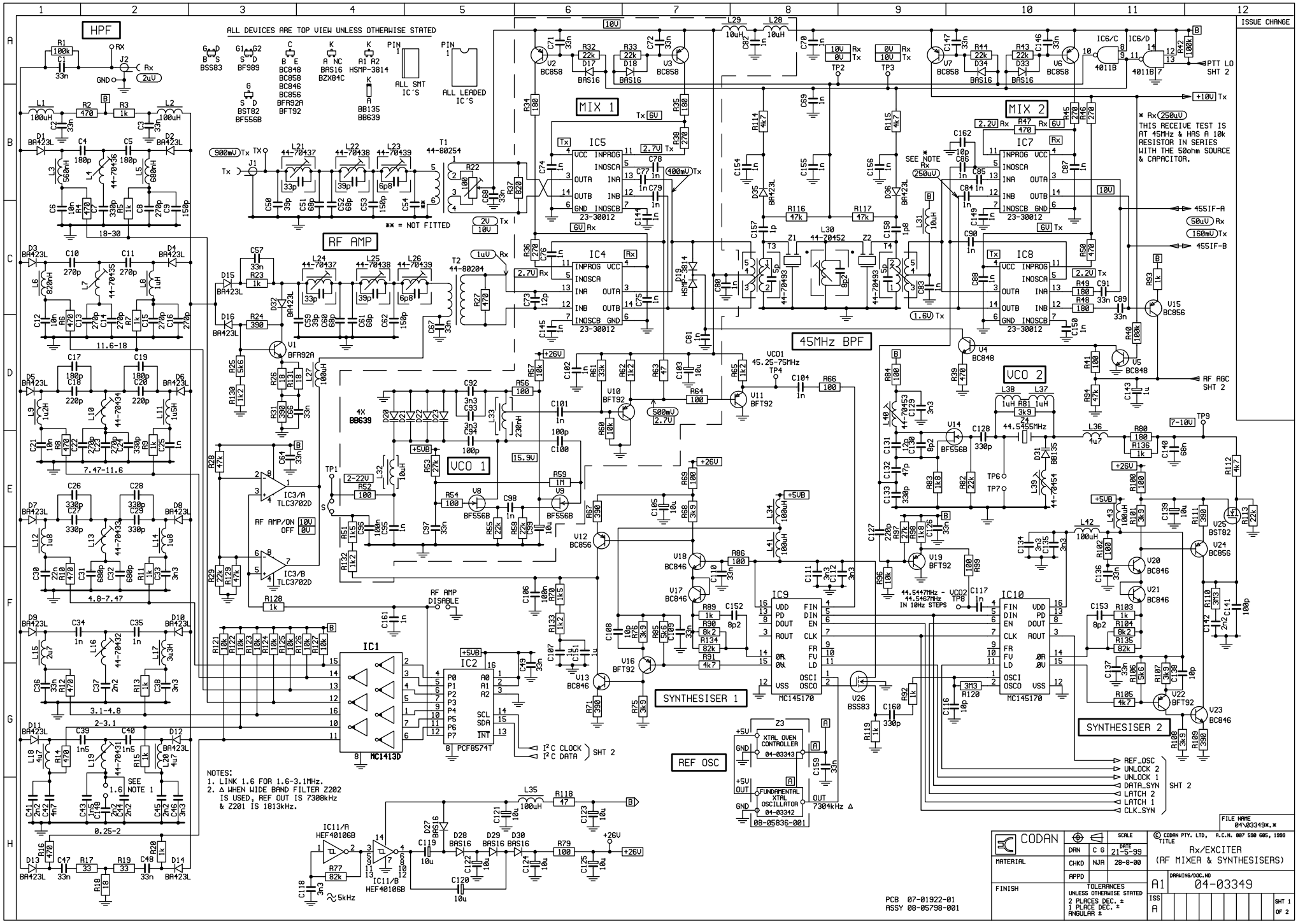
ISSUE CHANGE
HPF
ALL DEVICES ARE TOP VIEW UNLESS OTHERWISE STATED
MIX 1
MIX 2
RF AMP
45MHz BPF
VCO 1
VCO 2
SYNTHESISER 1
SYNTHESISER 2
REF OSC
THIS RECEIVE TEST IS AT 45MHz & HAS A 10k RESISTOR IN SERIES WITH THE 50ohm SOURCE & CAPACITOR.
NOTES:
1. LINK 1.6 FOR 1.6-3.1MHz.
2. Δ WHEN WIDE BAND FILTER Z202 IS USED, REF OUT IS 7308kHz & Z201 IS 1813kHz.
PCB 07-01922-01
ASSY 08-05798-001
CODAN
Rx/EXCITER
(RF MIXER & SYNTHESISERS)
04-03349
A1
ISS A
SHT 1 OF 2
© CODAN PTY. LTD, A.C.N. 007 590 605, 1999

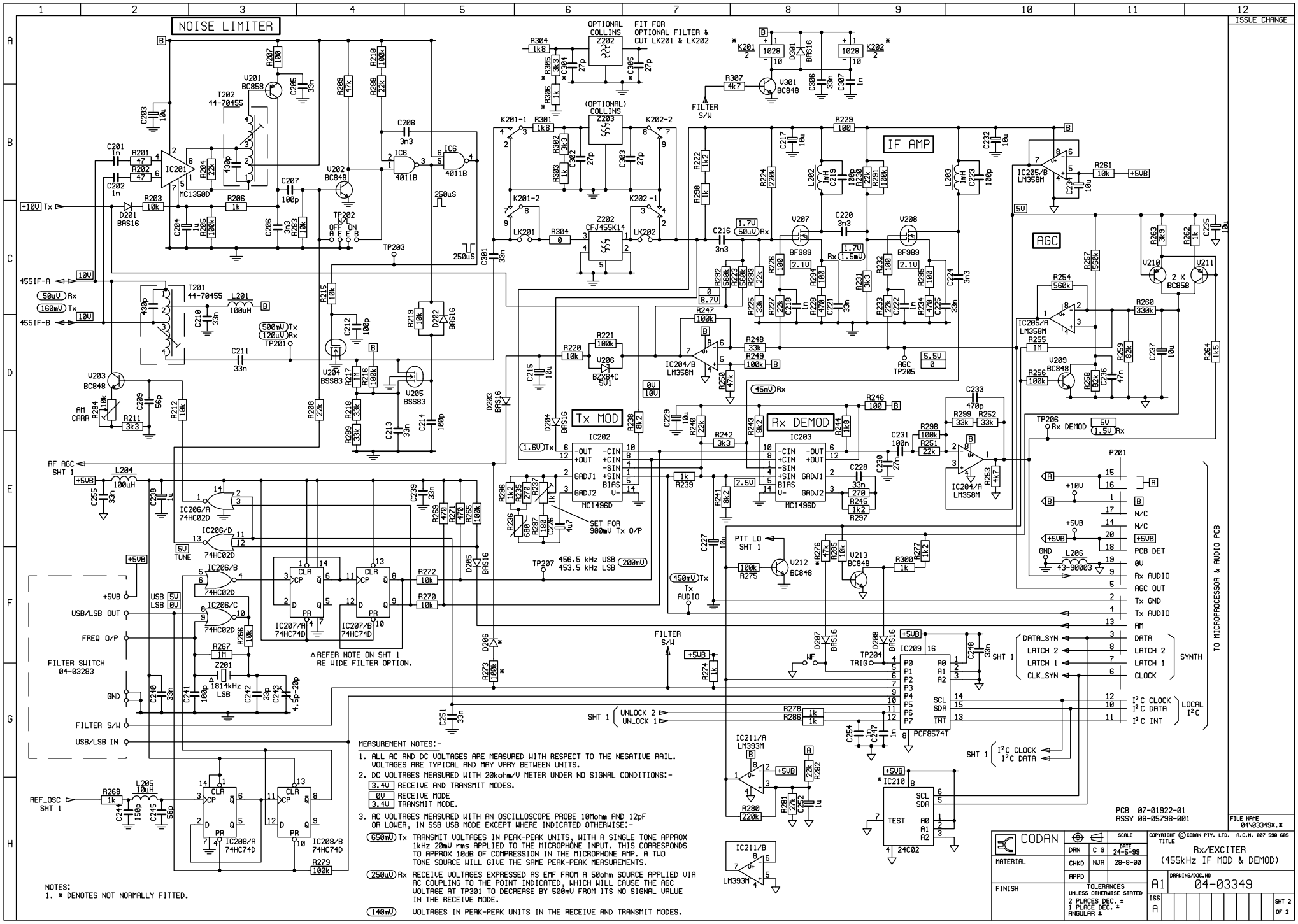
NOISE LIMITER
IF AMP
AGC
Tx MOD
Rx DEMOD
OPTIONAL COLLINS
FIT FOR OPTIONAL FILTER & CUT LK201 & LK202
(OPTIONAL) COLLINS
FILTER S/W
ISSUE CHANGE
TO MICROPROCESSOR & AUDIO PCB
SYNTH
LOCAL I²C
FILTER SWITCH 04-03283
MEASUREMENT NOTES:-
1. ALL AC AND DC VOLTAGES ARE MEASURED WITH RESPECT TO THE NEGATIVE RAIL. VOLTAGES ARE TYPICAL AND MAY VARY BETWEEN UNITS.
2. DC VOLTAGES MEASURED WITH 20kohm/V METER UNDER NO SIGNAL CONDITIONS:-
3.4V RECEIVE AND TRANSMIT MODES.
0V RECEIVE MODE
3.4V TRANSMIT MODE.
3. AC VOLTAGES MEASURED WITH AN OSCILLOSCOPE PROBE 10Mohm AND 12pF OR LOWER, IN SSB USB MODE EXCEPT WHERE INDICATED OTHERWISE:-
650mV Tx TRANSMIT VOLTAGES IN PEAK-PEAK UNITS, WITH A SINGLE TONE APPROX 1kHz 20mV rms APPLIED TO THE MICROPHONE INPUT. THIS CORRESPONDS TO APPROX 10dB OF COMPRESSION IN THE MICROPHONE AMP. A TWO TONE SOURCE WILL GIVE THE SAME PEAK-PEAK MEASUREMENTS.
250uV Rx RECEIVE VOLTAGES EXPRESSED AS EMF FROM A 50ohm SOURCE APPLIED VIA AC COUPLING TO THE POINT INDICATED, WHICH WILL CAUSE THE AGC VOLTAGE AT TP301 TO DECREASE BY 500mV FROM ITS NO SIGNAL VALUE IN THE RECEIVE MODE.
140mV VOLTAGES IN PEAK-PEAK UNITS IN THE RECEIVE AND TRANSMIT MODES.
NOTES:
1. * DENOTES NOT NORMALLY FITTED.
PCB 07-01922-01
ASSY 08-05798-001
FILE NAME 04\03349W.*
CODAN
MATERIAL
FINISH
DRN C G
CHKD NJA
APPD
SCALE
DATE 24-5-99
28-8-00
TOLERANCES UNLESS OTHERWISE STATED
2 PLACES DEC. ±
1 PLACE DEC. ±
ANGULAR ±
COPYRIGHT ©CODAN PTY. LTD. A.C.N. 007 590 605
TITLE
Rx/EXCITER
(455kHz IF MOD & DEMOD)
A1
DRAWING/DOC.NO
04-03349
ISS A
SHT 2 OF 2

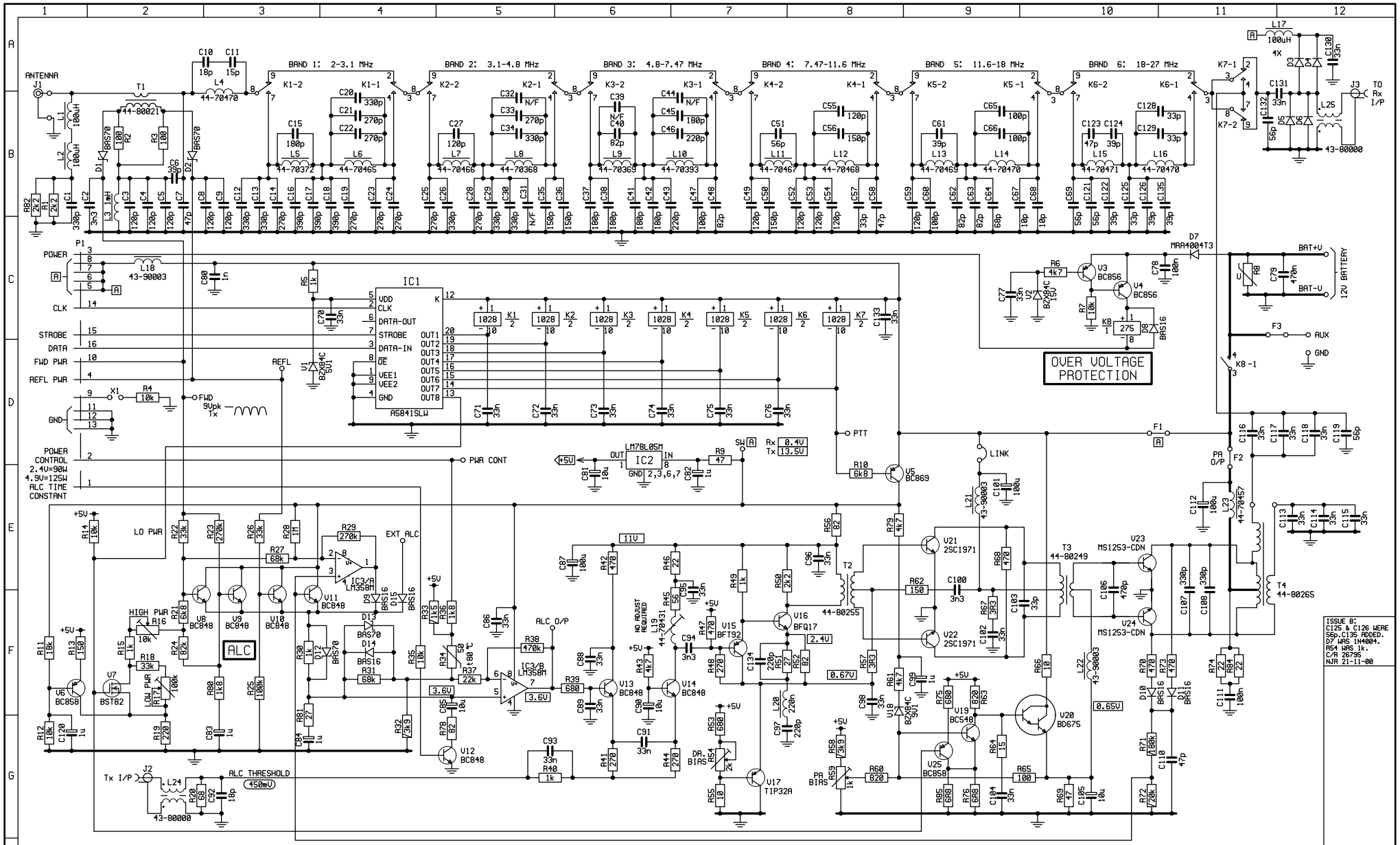

ISSUE B:
C125 & C126 WERE 56p.C135 ADDED.
D7 WAS 1N4004.
R54 WAS 1k.
C/R 26795
NJA 21-11-00

FILE NAME
03360__B

MEASUREMENT NOTES:-

1. ALL VOLTAGES ARE MEASURED WITH RESPECT TO THE CHASSIS. VOLTAGES ARE TYPICAL AND MAY VARY BETWEEN UNITS.
2. DC VOLTAGES SHOWN 3.4V ARE MEASURED WITH A DVM, & ARE IN THE TRANSIT MODE & WITHOUT SIGNALS APPLIED.
3. USE AN EARTH AS CLOSE AS PRACTICABLE TO POINT OF MEASUREMENT. WIND EXCESS PROBE EARTH LEAD AROUND PROBE TO MINIMISE LOOP AREA.
4. ALL MEASUREMENTS ARE MADE WITH A DC SUPPLY OF 13.6V & 50W PEP O/P.
5. DC VOLTAGES SHOWN Tx 3.4V AND WAVEFORMS ARE MEASURED WITH 50W PEP TWO TONE OUTPUT.

ALL DEVICES ARE SHOWN TOP VIEW

K: A NC — BAS16, BAS70, BZX84C
G: S D — J310, BF545B
C: B E — BFT92, BFR92A, BC846, BC848, BC856, BC858
BCE — BC869, BFQ17
PIN 1 — ALL I/C'S
E C B — BD675
CASE=EMITTER: B E C — 2SC1971; B C E — TIP32A
MATCHING LETTER: C E H E B — MS1253-CDN
K A — MRA4001T3

NOTES:
1. DIODES ARE BAS16, OR EQUIVALENT, UNLESS OTHERWISE STATED.
2. RESISTORS SHOWN ARE 1% TOLERANCE.

PCB 07-01896-02
ASSY 08-05749-003

CODAN	DRN C G	SCALE	© CODAN PTY. LTD, A.C.N. 007 590 605, 2000
MATERIAL	CHKD NJA	DATE 26-5-00 / 31-8-00	TITLE 50W PA & FILTER (26.5MHz)
FINISH	APPD	TOLERANCES UNLESS OTHERWISE STATED 2 PLACES DEC. ± 1 PLACE DEC. ± ANGULAR ±	A1 DRAWING/DOC.NO 04-03360
			ISS B — SHT 1 OF 1

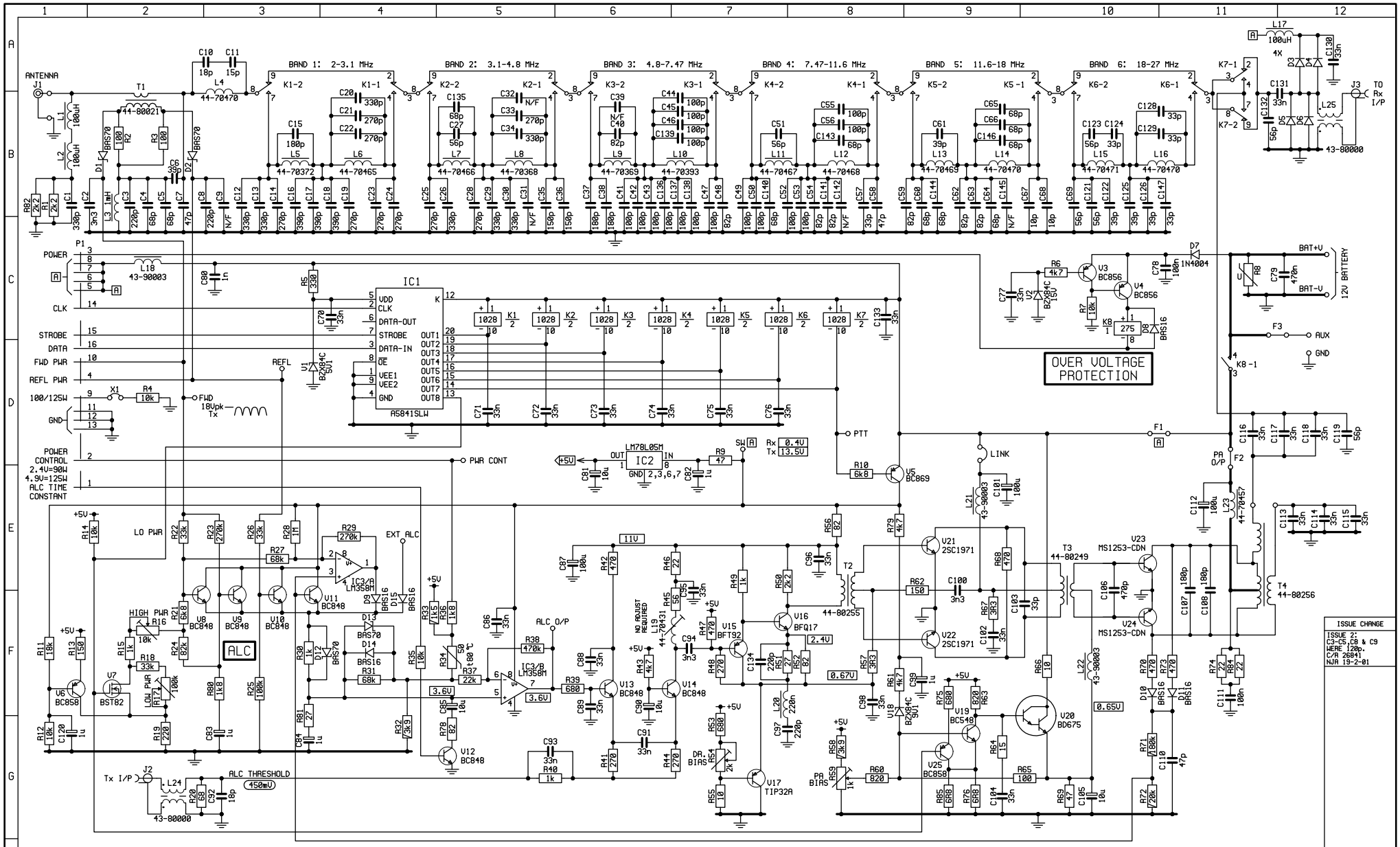
BAND 1: 2-3.1 MHz
BAND 2: 3.1-4.8 MHz
BAND 3: 4.8-7.47 MHz
BAND 4: 7.47-11.6 MHz
BAND 5: 11.6-18 MHz
BAND 6: 18-27 MHz
ANTENNA
J1
T1
44-80021
L4
44-70470
IC1
A5841SLW
IC2
LM78L05M
IC3/A
LM358M
IC3/B
LM358M
POWER
CLK
STROBE
DATA
FWD PWR
REFL PWR
100/125W
GND
POWER CONTROL
2.4V=90W
4.9V=125W
ALC TIME CONSTANT
PTT
PWR CONT
REFL
FWD
18Vpk
Tx
LO PWR
HIGH PWR
LOW PWR
ALC
EXT ALC
ALC O/P
ALC THRESHOLD
450mV
Tx I/P
J2
L24
43-80000
OVER VOLTAGE PROTECTION
BAT+V
BAT-V
12V BATTERY
AUX
GND
F3
F1
F2
PA O/P
LINK
T2
44-80255
T3
44-80249
T4
44-80256
V20
BD675
V21
2SC1971
V22
2SC1971
V23
MS1253-CDN
V24
MS1253-CDN
V16
BFQ17
V15
BFT92
V17
TIP32A
V19
BC548
V25
BC858
PA BIAS
DR BIAS
NB ADJUST REQUIRED
J3
TO Rx I/P
43-80000
ISSUE CHANGE
ISSUE 2:
C3-C5,C8 & C9
WERE 120p.
C/R 26841
NJA 19-2-01
FILE NAME
03372__2.*
MEASUREMENT NOTES:-
1. ALL VOLTAGES ARE MEASURED WITH RESPECT TO THE CHASSIS. VOLTAGES ARE TYPICAL AND MAY VARY BETWEEN UNITS.
2. DC VOLTAGES SHOWN 3.4V ARE MEASURED WITH A DVM, & ARE IN THE TRANSIT MODE & WITHOUT SIGNALS APPLIED.
3. USE AN EARTH AS CLOSE AS PRACTICABLE TO POINT OF MEASUREMENT. WIND EXCESS PROBE EARTH LEAD AROUND PROBE TO MINIMISE LOOP AREA.
4. ALL MEASUREMENTS ARE MADE WITH A DC SUPPLY OF 13.6V & 100W PEP O/P.
5. DC VOLTAGES SHOWN Tx 3.4V AND WAVEFORMS ARE MEASURED WITH 100W PEP TWO TONE OUTPUT.
ALL DEVICES ARE SHOWN TOP VIEW
K A NC
BAS16
BAS70
BZX84C
G S D
J310
BF545B
C B E
BFT92
BFR92A
BC846
BC848
BC856
BC858
BC869
BFQ17
PIN 1
ALL I/C'S
BD675
CASE=EMITTER
2SC1971
TIP32A
MATCHING LETTER
MS1253-CDN
1N4004
NOTES:
1. DIODES ARE BAS16, OR EQUIVALENT, UNLESS OTHERWISE STATED.
2. RESISTORS SHOWN ARE 2% TOLERANCE.
PCB 07-01951-01
ASSY 08-05872-001
CODAN
MATERIAL
FINISH
DRN ILT
CHKD NJA 8-11-00
APPD NJA 8-11-00
DATE 25-10-00
SCALE
TOLERANCES UNLESS OTHERWISE STATED
2 PLACES DEC. ±
1 PLACE DEC. ±
ANGULAR ±
© CODAN PTY. LTD, A.C.N. 007 590 685, 2000
TITLE
PA & FILTER
26.5MHz (INTERIM)
A1
DRAWING/DOC.NO
04-03372
ISS 1 2
SHT 1 OF 1

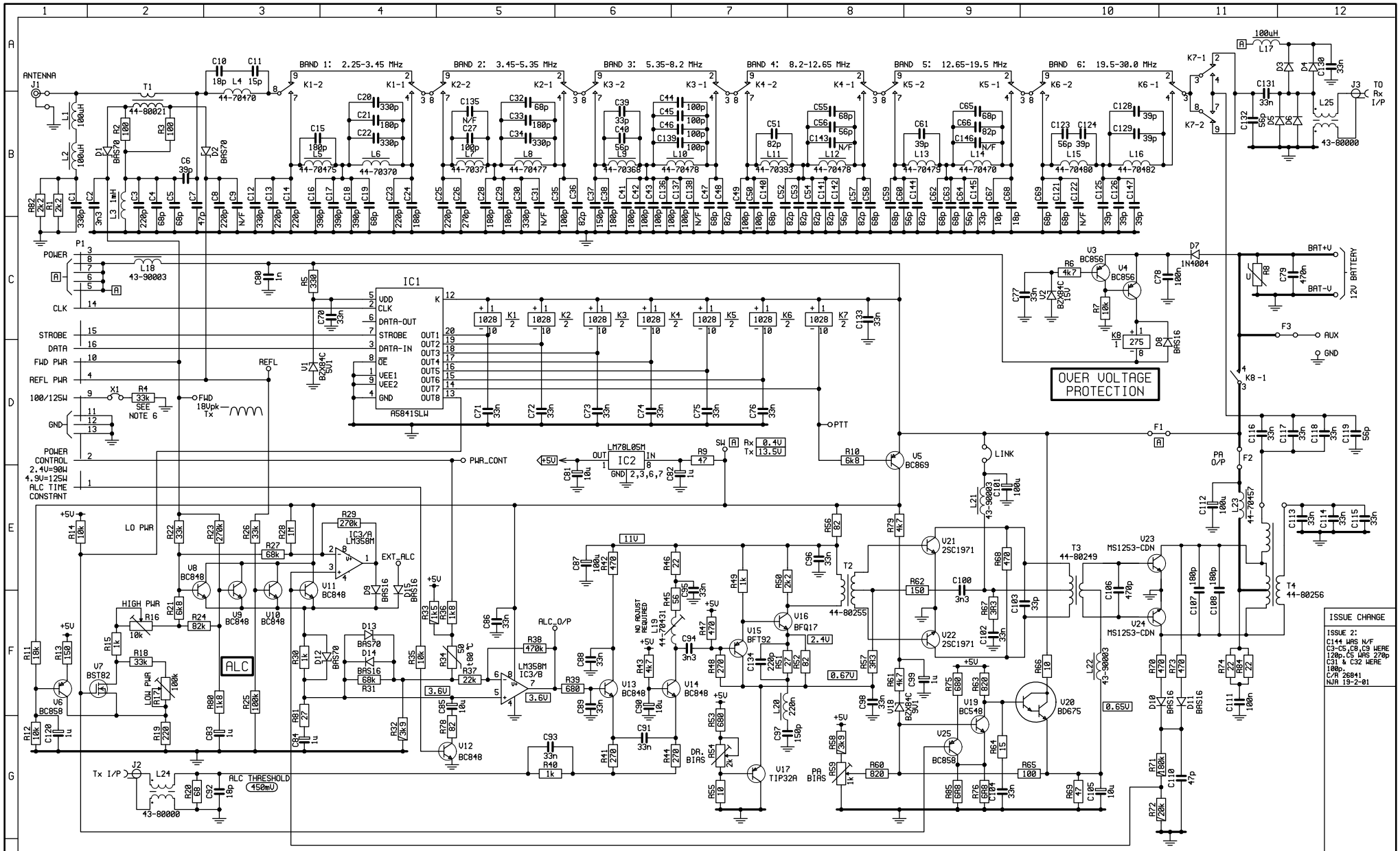

ISSUE CHANGE

ISSUE 2:
C144 WAS N/F
C3-C5,C8,C9 WERE 120p.C5 WAS 270p
C31 & C32 WERE 100p.
C/R 26841
NJA 19-2-01

MEASUREMENT NOTES:-

1. ALL VOLTAGES ARE MEASURED WITH RESPECT TO THE CHASSIS. VOLTAGES ARE TYPICAL AND MAY VARY BETWEEN UNITS.
2. DC VOLTAGES SHOWN 3.4V ARE MEASURED WITH A DVM, & ARE IN THE TRANSIT MODE & WITHOUT SIGNALS APPLIED.
3. USE AN EARTH AS CLOSE AS PRACTICABLE TO POINT OF MEASUREMENT. WIND EXCESS PROBE EARTH LEAD AROUND PROBE TO MINIMISE LOOP AREA.
4. ALL MEASUREMENTS ARE MADE WITH A DC SUPPLY OF 13.6V & 100W PEP O/P.
5. DC VOLTAGES SHOWN Tx 3.4V AND WAVEFORMS ARE MEASURED WITH 100W PEP TWO TONE OUTPUT.
6. FOR 100W CHANGE R4 TO 18k.

ALL DEVICES ARE SHOWN TOP VIEW

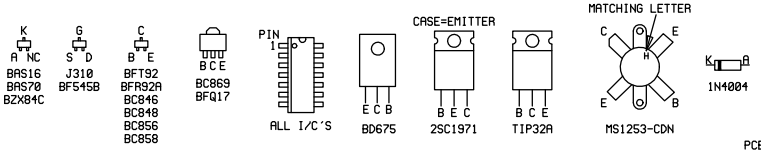

NOTES:
1. DIODES ARE BAS16, OR EQUIVALENT, UNLESS OTHERWISE STATED.
2. RESISTORS SHOWN ARE 2% TOLERANCE.

PCB : 07-01951-01
ASSY: 08-05872-002

CODAN	DRN ILT	SCALE / DATE 25-10-00	© CODAN PTY. LTD, A.C.N. 007 590 685, 1999
MATERIAL	CHKD NJA	8-11-00	TITLE: PA & FILTER 30MHz (INTERIM)
	APPD NJA	8-11-00	DRAWING/DOC.NO: 04-03373
FINISH	TOLERANCES UNLESS OTHERWISE STATED 2 PLACES DEC. ± 1 PLACE DEC. ± ANGULAR ±		A1 ISS 1 2 SHT 1 OF 1

FILE NAME 04\03373__2.*

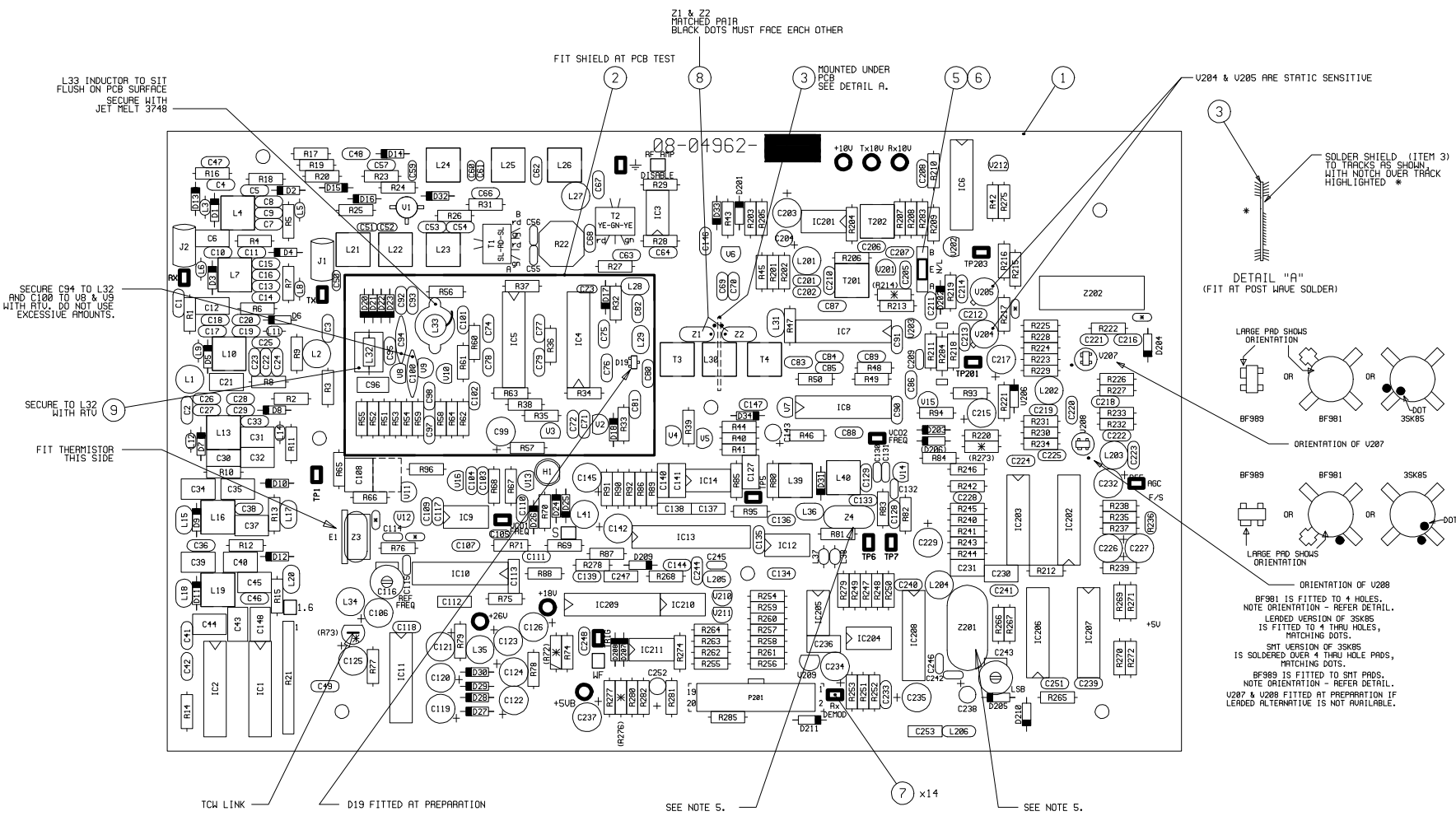

NOTES:-

1. [ ] THESE RESISTORS ARE 2% TOLERANCE.
2. ALL DIODES ARE BAW62 OR EQUIVALENT UNLESS OTHERWISE STATED.
3. * COMPONENTS MARKED WITH THIS SYMBOL ARE NOT FITTED.
4. FORM & SOLDER SHIELD IN PLACE - AFTER TEST (ITEM 2).
5. SECURE AFTER SOLDERING USING RTV SILICON.

CHANGE REQUEST

ISSUE C 29-8-94
C/R 24815
VARIOUS CHANGES.
NJA

ISSUE D
C/R 24876
SHIELD ITEM 4 DELETED.
NJA 16-11-94

ISSUE E 28-11-94
C/R 24837
T1 WAS GN-SL-GN
NJA 9-12-94

ISSUE 2
R214 WAS 4k3.
D19 NOTE WAS - "D19 FITTED AT POST WAVE SOLDER".
C/R 24179
C.M. 13/2/95

ISSUE 3.
C/R24474
R64 WAS 470R,
R208 WAS 10k,
R211 WAS 6k8,
R276 WAS 10k,
Z203(OPTION) WAS 526-8635-010
C148(2n2),
D210,D211,
R96(1k),R283(10k
R284(SOT),
R285(4k7),
V16(BF494),
CRYSTAL OVEN & LINKS 1.6,
RF AMP DISABLE & WF ADDED.
FILTER SWITCH CONNECTIONS ADDED. D206,R273
R276 NOT FITTED.
NJA 21-2-96

ISSUE 4
C/R 24594
C253(100n) ADDED
SMT ALTERNATIVE ADDED TO V207 & V208 LAYOUT.
R211 WAS 7k5,2%
PADS +5V & F/S ADDED.
NJS 6-5-96

ISSUE 5
NOTE "SECURE C94 TO L32 AND..." ADDED.
C/R 24818
NJA 12-12-96

ISSUE 6:
C/R 24883
R54 WAS 330R,
R55,R58 WERE 15k
R251 WAS 22k.
NOTE RE RTV QTY ADDED.
19-2-97 NJA

ISSUE 7
PCB WAS ISS 4.
C/R 25023
R74 IS NOW FITTED. R73 HAS TCW LINK. R72/74 REF CORRECTED.
C/R 25043
C55 & C56 WERE 2p2.
C/R 25040
NOTE 5 ADDED.
C/R 25022
27-05-97 NJA

PCB 07-01532-05
ASSY P/No. 08-04962-001

FILE NAME 07\01532_5.PCB

CODAN

MATERIAL

FINISH

		SCALE 2:1
DRN.	I.T	DATE 19-11-93
CHKD.	NJA	15-2-94
APPD.	C.M	8-2-95

TOLERANCES UNLESS OTHERWISE STATED
2 PLACES DEC
1 PLACE DEC
ANGULAR

© CODAN PTY LTD, A.C.N. 007 590 605, 1994

RECEIVER/EXCITER ASSEMBLY

A1 DRAWING/DOC No. 08-04962

ISS 2 3 4 5 6 7 SHT 1 OF 2

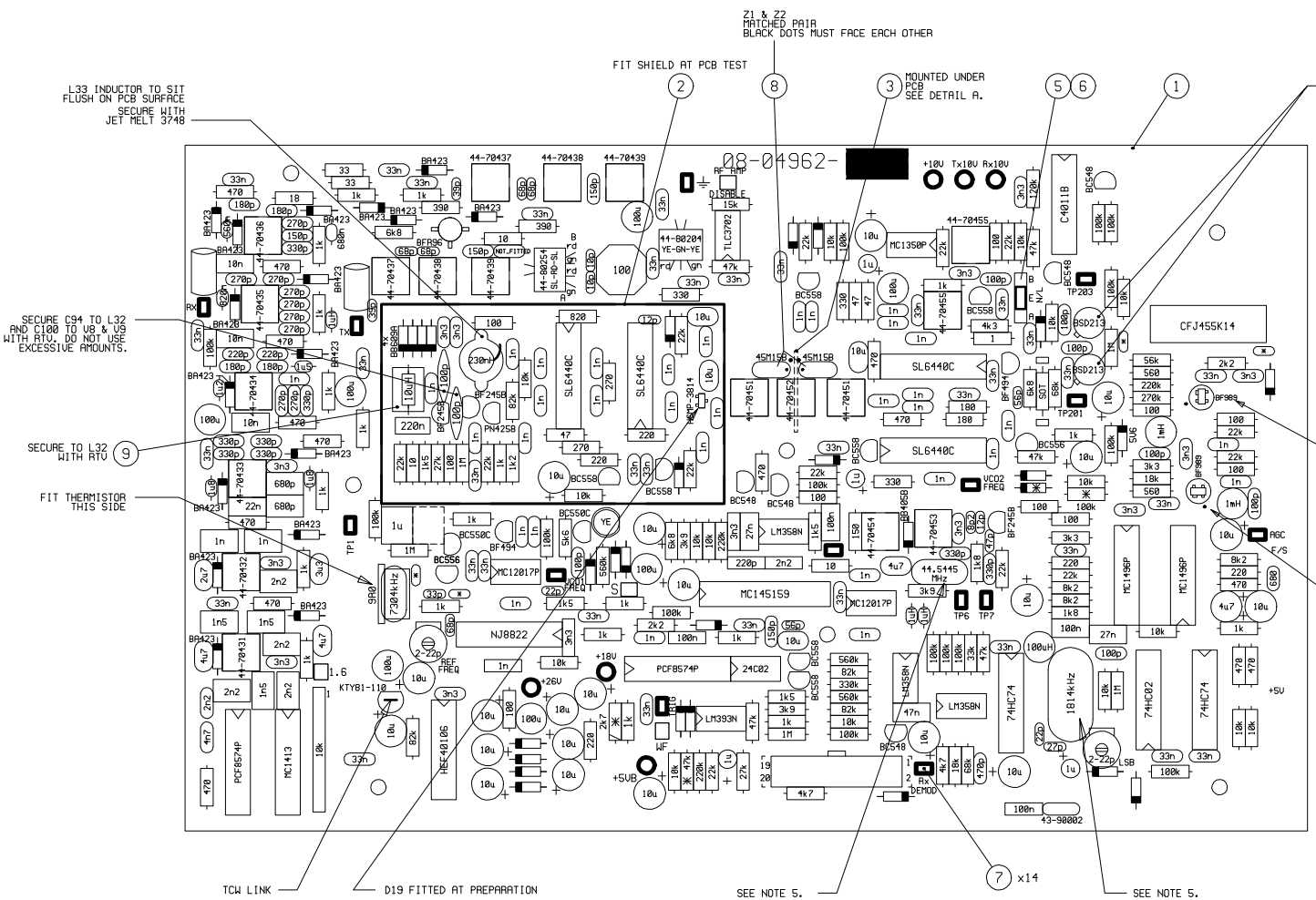

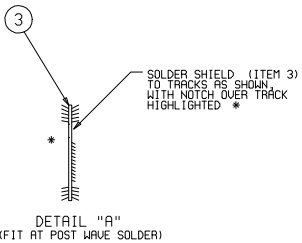

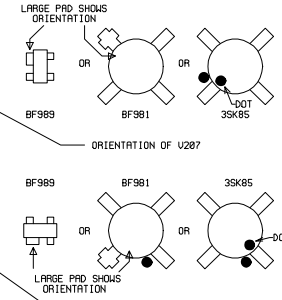

BF981 IS FITTED TO 4 HOLES.
NOTE ORIENTATION - REFER DETAIL.

LEADED VERSION OF 3SK85 IS FITTED TO 4 THRU HOLES, MATCHING DOTS.

SMT VERSION OF 3SK85 IS SOLDERED OVER 4 THRU HOLE PADS, MATCHING DOTS.

BF989 IS FITTED TO SMT PADS.
NOTE ORIENTATION - REFER DETAIL.

V207 & V208 FITTED AT PREPARATION IF LEADED ALTERNATIVE IS NOT AVAILABLE.

NOTES:-

1. [ ] THESE RESISTORS ARE 2% TOLERANCE.
2. ALL DIODES ARE BAW62 OR EQUIVALENT UNLESS OTHERWISE STATED.
3. * COMPONENTS MARKED WITH THIS SYMBOL ARE NOT FITTED.
4. FORM & SOLDER SHIELD IN PLACE - AFTER TEST (ITEM 2).
5. SECURE AFTER SOLDERING USING RTV SILICON.

CHANGE REQUEST

ISSUE C 29-8-94
C/R 24815
VARIOUS CHANGES.
NJA

ISSUE D
C/R 24876
SHIELD ITEM 4 DELETED.
NJA 16-11-94

ISSUE E 28-11-94
C/R 24837
L1 WAS GN-S-GN
NJA 9-12-94

ISSUE 2
R214 WAS 4k3.
D19 NOTE WAS - "D19 FITTED AT POST WAVE SOLDER".
C/R 24179
C.M. 13/2/95

ISSUE 3:
C/R24474
R64 WAS 470R,
R208 WAS 10k,
R211 WAS 6k8,
R276 WAS 10k,
Z203(OPTION) WAS 526-8635-010
C148(2n2),
D210,D211,
R96(1k),R283(10k
R284(SOT),
R285(4k7)
V16(BF494),
CRYSTAL OVEN & LINKS 1.6,
RF AMP DISABLE & WF ADDED.
FILTER SWITCH CONNECTIONS ADDED. D206,R273
R276 NOT FITTED.
NJA 21-2-96

ISSUE 4
C/R 24594
C253(100n) ADDED
SMT ALTERNATIVE ADDED TO V207 & V208 LAYOUT.
R211 WAS 7k5,2%
PADS +5U & F/S ADDED.
NJS 6-5-96

ISSUE 5
NOTE "SECURE C94 TO L32 AND..." ADDED.
C/R 24818
NJA 12-12-96

ISSUE 6:
C/R 24883
R54 WAS 330R,
R55,R58 WERE 15k
R251 WAS 22k.
NOTE RE RTV QTY ADDED.
19-2-97 NJA

ISSUE 7
PCB WAS ISS 4.
C/R 25023
R74 IS NOW FITTED. R73 HAS TCW LINK. R72/74 REF CORRECTED.
C/R 25043
C55 & C56 WERE 2p2.
C/R 25040
NOTE 5 ADDED.
C/R 25022
27-05-97 NJA

PCB 07-01532-05
ASSY P/No. 08-04962-001

FILE NAME 07\01532_5.PCB

CODAN

MATERIAL

FINISH

		SCALE 2:1	
DRN.	I.T	DATE 19-11-93	
CHKD.	NJA	15-2-94	
APPD.	C.M	8-2-95	

TOLERANCES UNLESS OTHERWISE STATED
2 PLACES DEC
1 PLACE DEC
ANGULAR

© CODAN PTY LTD, A.C.N. 007 590 605, 1994

RECEIVER/EXCITER ASSEMBLY

A1 DRAWING/DOC No. 08-04962

ISS 2 3 4 5 6 7 SHT 2 OF 2

DO NOT SCALE

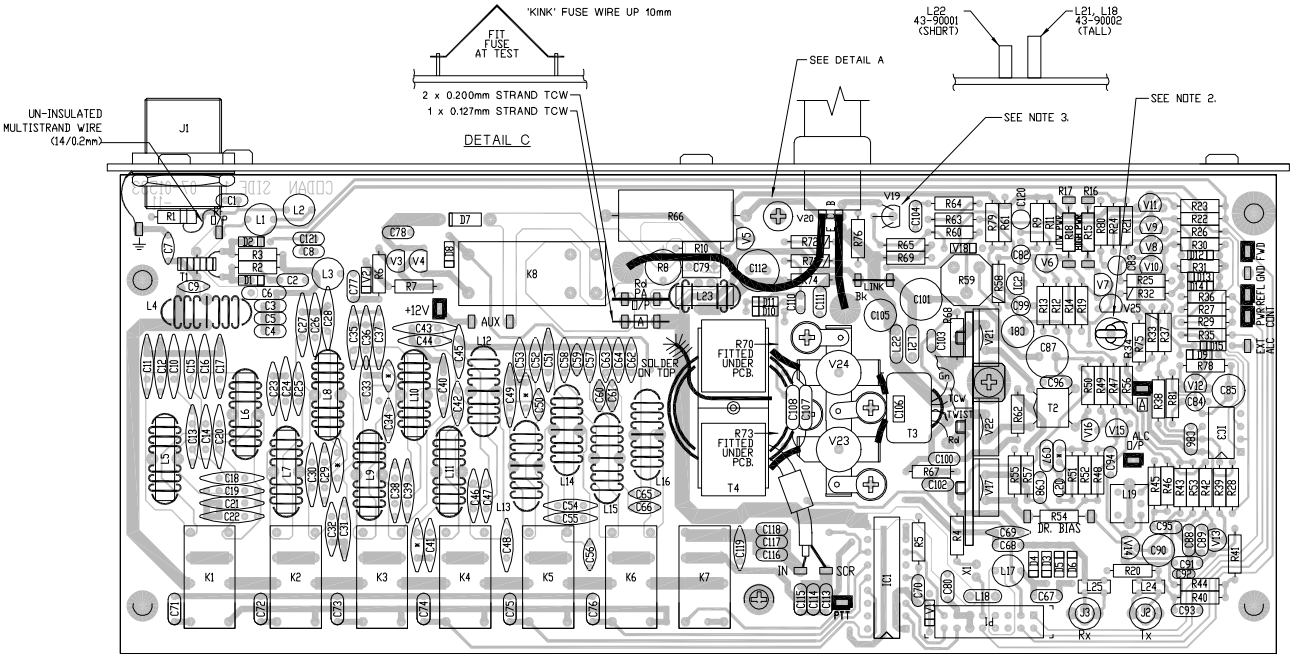

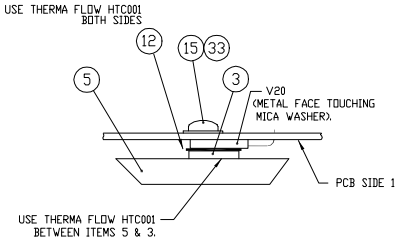

DETAIL A

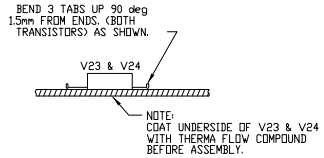

DETAIL B

NOTES:
1. ALL LINKS ARE 22 SWG.
2. FIT HEATSHRINK SLEEVE (ITEM 28) x 8mm OVER R34, ENSURING THAT THE TOP IS COVERED. COAT WITH THERMA FLOW COMPOUND, INSERT INTO HEATSINK (ITEM 5) & SOLDER.
3. COAT V19 WITH THERMA FLOW COMPOUND, INSERT INTO HEATSINK & SOLDER.
4. C106 (1n SMT CAPACITOR) IS MOUNTED UNDER T3.

ISSUE B
ITEM 25 ADDED.
C/R 23839
21-03-94 NJA

ISSUE C
VAR. CHNGES.
C/R 24015
11-10-94 NJA

ISSUE D
L21 WAS L121
ARROWS - STANDARDISED.
C/R 24078
12-01-95 CM

ISSUE E
VAR. CHNGES.
C/R 24037
C/R 24102
C/R 24104
C/R 24107
12-01-95 CM

ISSUE 2
R15 & R18 VAL. VALUES ADDED.
C/R 24124
28-02-95 CM

ISSUE 3
D15 & EXT ALC LOUPOT ADDED.
PCB WAS ISS 3
R41 & R44 WERE 330R
C/R 24383
13-10-95 NJA

ISSUE 4
PCB WAS ISS 5
C122-C126 ADDED
C106 WAS 470p
D3-DR WERE BA423.
NOTE 7 ADDED.
C/R 24478
20-02-96 NJA

ISSUE 5
C22 WAS 180p
C/R 24547
15-05-96 NJA

ISSUE 6
44-70468 WAS Rd-Dr.
12-06-96 JFB

ISSUE 7
PCB WAS ISS 5
25-07-96
NOTE 5 (SHT2) CHANGED
C/R 24779
08-01-97 RRU

ISSUE 8
PCB WAS ISS 7
C9, C49, C50 & V2 MOVED.
DETAIL E SHOWED MFR260
C/R 24945
25-03-97 NJA

ISSUE 9
PCB WAS ISS 9
C/R 25023
13-06-97 BCL

ISSUE 10
REDRWN ON 2 SHTS.
ITEMS 10,11,12, 17 & 14 RMVD.
ITEMS 33 & 35 ADDED.
C/R 25026
25-08-97 BCL

ISSUE 11
VARIANT TABLE ADDED.
C/R 25130
03-10-97 CAE

ISSUE 12
R34 ROTATED.
PCB WAS -09
C/R 25329
13-05-98 NJA

ISSUE 13
PCB WAS -10
T4 ASSY MOVED
C/R 25542
C/R 25539
C1 MOVED
C/R 25585
PB 28-9-98

PCB 07-01533-11

FILE No. 08\04963_13.DWG
TSM

CODAN

MATERIAL

FINISH

DIMENSIONS IN mm

SCALE 2:1		
DATE		
DRN	CG	19-11-93
CHKD	NJA	11-02-94
APPD	CM	12-01-95

TOLERANCES UNLESS OTHERWISE STATED
2 PLACES DEC. ±0.25
1 PLACE DEC. ±0.5
0 PLACE DEC. ±1
ANGULAR ±2°

© CODAN PTY LTD, A.C.N. 007 590 606: 1997

TITLE
PA AND FILTER
FINAL ASSEMBLY

A1
DRAWING/DOC NO.
08-04963

ISS 11 12 13

SHT. 1 OF 1

DO NOT SCALE

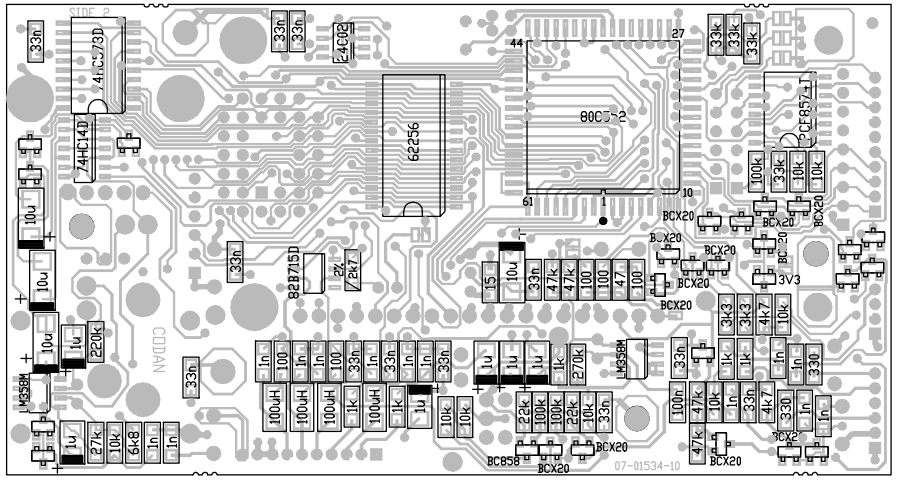

VIEW ON SIDE 2 SURFACE MOUNT COMPONENTS ONLY

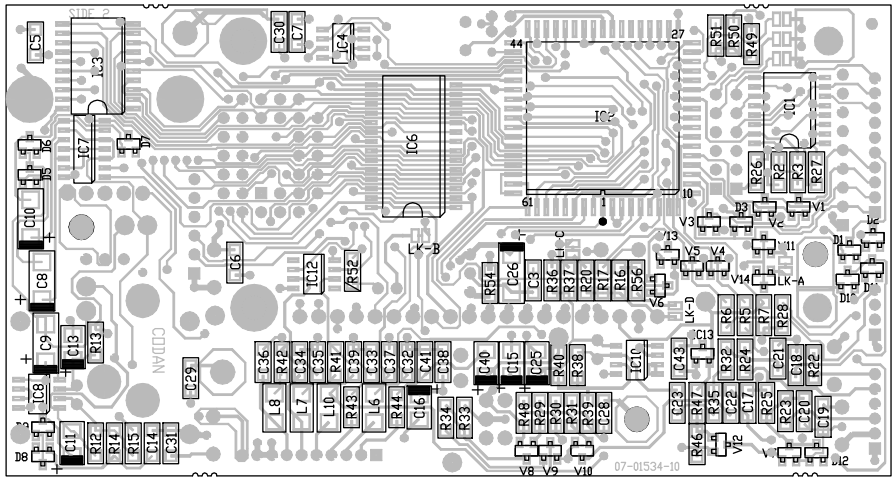

VIEW ON SIDE 2 SURFACE MOUNT COMPONENTS ONLY

NOTES
1. ALL UNMARKED DIODES ARE BAS16
2. CUT TRACKS AT LINKS A, B & C
AND SOLDER ACROSS LINK D (-003 ONLY).

ASSEMBLY	A	B	C	D	LINK	
08-04964-003	X	X	X	✓	LO PWR	SEE NOTE 2
OTHERS	✓	✓	✓	X	STD	

x = NOT ASSIGNED

PCB 07-01534-10

ISSUE 11:
C/R 25155
C4,D4,D13,D14,R8-R11 & R55 DELETED.
R7 WAS 10k.
IC13,R56,TP(RESET) & LK-A - LK-D & TABLE ADDED.
PCB WAS ISSUE 7.
GW 3-10-97

ISSUE 12:
C/R 25179
REFS D3 & V2 SWAPPED. VALUES V8 & V10 SWAPPED.
VARIANT ADDED TO NOTE 2.
NOTES MOVED.
PCB WAS ISSUE 08.
LABEL ADDED TO RST TEST POINT.
GW 6-11-97

ISSUE 13
TABLE: 'OTHERS' WAS 08-04964-001 & -002x.
C/R 25368
11-5-98 MRU

ISSUE 14
REF SHT 2

ISSUE 15
TABLE - H1/R16 ADDED.
C/R 25724
GW 2-11-98

ISSUE 16
TABLE - H1/R16 DELETED.
C/R 25820
GW 1-12-98

ISSUE 17
C23 WAS 1808
C/R 26022
SCS 28-5-99

ISSUE 18
REF SHT 2

CHANGE REQUEST

ISSUE B
C/R 24015
PCB CHANGED
C/R 24037
IC9 AND VIEW 'B' DELETED
NJA 11-94

ISSUE C
C/R 24107
COMPONENT VALUES CHANGED.
PCB CHANGED
JB 30-1-95

ISSUE 2
C/R 24182
R52 & R53 ADDED
LAND PATTERNS CHANGED
C/R 24216
DRG TITLE WAS CONTROL HEAD
NJA 4-4-95

ISSUE 3:
C/R 24270
PCB WAS ISSUE 4.
C26 WAS 1u.
22-5-95 NJA

ISSUE 4:
C/R 24295
R16 WAS 18ohm
NJA 11-7-95

ISSUE 5:
C/R 24474
R54 ADDED.
IC11 ROTATED.
C27 WAS 1u SMT ON SIDE 2.
NJA 20-2-96

ISSUE 6:
C/R 24583
V10 WAS BC858
V8 WAS BCX20
BCL 08-05-96

ISSUE 7
VARIANT TABLE ADDED.
C/R 24797
JFB 18-11-96

ISSUE 8
ITEM 10 WAS 10 WAY x2.
D14 & R55 ADDED.
C/R 24910
BCL 10/3/97

ISSUE 9
TABLE RMV'D.
C/R 25082
09-07-97 MRU

ISSUE 10
REFER SHT 2.
C/R 25026

FILE NAME
08\04964_18.DWG

CODAN

MATERIAL

FINISH

		SCALE 2:1
DRN	PJL	DATE 10-02-94
CHKD	NJA	10-02-94
APPD	CM	08-02-95

TOLERANCES UNLESS OTHERWISE STATED
2 PLACES DEC. ±0.25
1 PLACE DEC.
0 PLACE DEC.
ANGULAR

© CODAN PTY LTD, A.C.N. 007 590 605: 1994

TITLE
DISPLAY PANEL
SMT ASSEMBLY

A2

DRAWING/DOC NO.
08-04964

ISS 18

SHT. 1 OF 2

DO NOT SCALE

ASSEMBLE WITH FLAT TOWARDS PCB

TRIM PINS SHOWN THUS 'X'

SECURE TO PCB USING ITEM 12

IF REQUIRED TRIM PINS SHOWN THUS 'X' ON R1 & R45 TO PREVENT PINS SHORTING TO LUGS ON H1

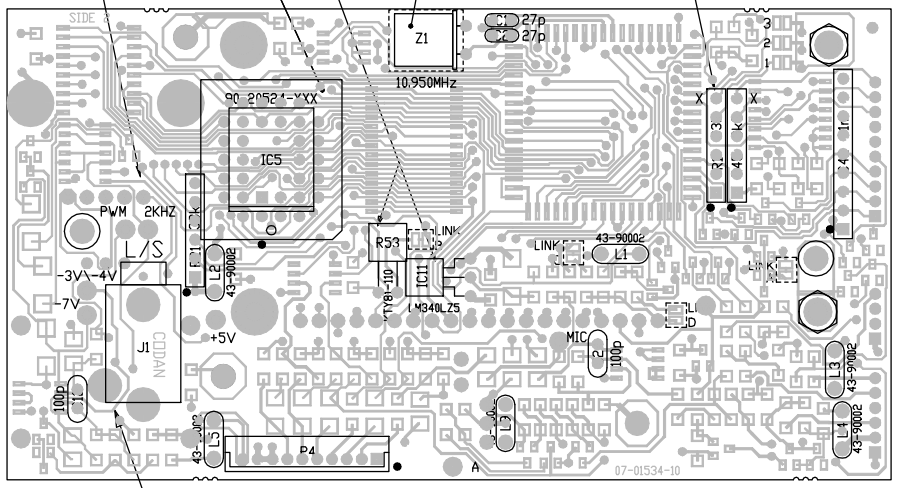

NUT ON J1 MUST BE DISCARDED PRIOR TO SOLDERING.
CUT LEAD LENGTH OF SPEAKER JACK J1 TO 2.5mm +/-0.5
AND SOLDER IN POSITION PRIOR TO SOLDERING S2 ON
OTHER SIDE OF PCB.
ENSURE L/S SPEAKER JACK IS TOP AND BOTTOM SOLDERED.

VIEW OF SIDE 2

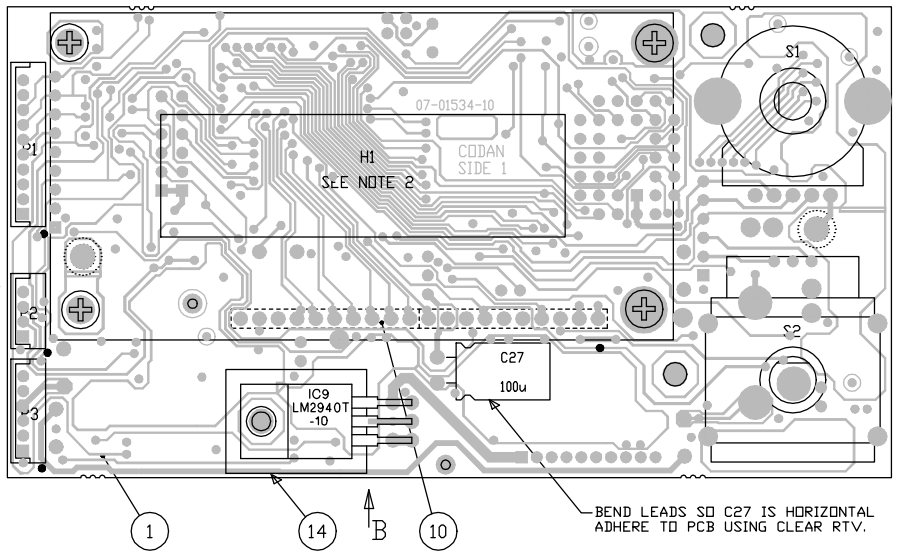

APPLY HEATSINK COMPOUND BETWEEN MICA WASHER & PCB, ENSURE IC9 IS FLAT AGAINST PCB

BEND LEADS SO C27 IS HORIZONTAL ADHERE TO PCB USING CLEAR RTV.

VIEW OF SIDE 1

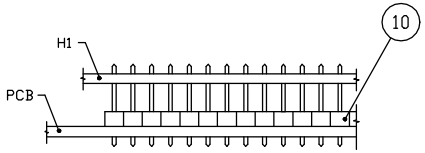

INSERT AND SOLDER SHORTER HEADER PINS INTO PCB BEFORE FITTING AND SOLDERING H1.
CHECK THAT LUGS ON H1 DO NOT SHORT TO PINS THROUGH PCB.

PART VIEW B

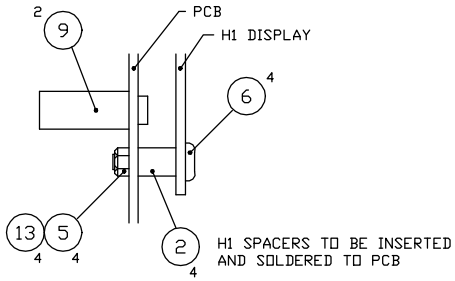

VIEW A

NOTES:

1. BOTH SWITCHES S1 AND S2 TO BE SET DOWN SQUARE AND FLUSH. TRIM LEADS AFTER ASSEMBLY.
2. DISPLAY H1 MUST BE LAST ITEM FITTED. TIGHTEN SCREWS FIRST THEN SOLDER PINS.
3. CUT TRACKS AT LINKS A, B & C AND SOLDER ACROSS LINK D (-003 ONLY).

ASSEMBLY	A	B	C	D	LINK	
08-04964-003	X	X	X	✓	LO PWR	SEE NOTE 3
OTHERS	✓	✓	✓	X	STD	

x = NOT ASSIGNED

ISSUE 13
IC5 WAS 90-20524-001/2, TABLE: 'OTHERS' WAS 08-04964-001 & -002x.
C/R25368

ISSUE 14
VIEW A: 'STANDOFFS SOLDERED TOP & BOTTOM' NOTE DELETED,
PART VIEW B: 'TRIM HEADER PINS AFTER SOLDERING' NOTE DELETED.
C/R 25402
11-6-98 VS

ISSUE 15
TABLE - H1/R16 ADDED
C/R 25724
GW 2-11-98

ISSUE 16
TABLE - H1/R16 DELETED.
C/R 25820
GW 1-12-98

ISSUE 17
PCB WAS 07-01534-09
C/R 26022
SCS 28-5-99

ISSUE 18
LINKS A-D AREA, ITEM 14 & IC9 ADDED.
C/R 26173
15-7-99 AJC

CHANGE REQUEST

ISSUE B
C/R 24015
PCB CHANGED
C/R 24037
IC9 AND VIEW 'B' DELETED
NJA 11-94

ISSUE C
C/R 24107
COMPONENT VALUES CHANGED
PCB CHANGED
JB 30-1-95

ISSUE 2
C/R 24182
R52 & R53 ADDED
LAND PATTERNS CHANGED
C/R 24216
DRG TITLE WAS CONTROL HEAD
NJA 4-4-95

ISSUE 3:
C/R 24270
PCB WAS ISSUE 4
C26 WAS 1u.
22-5-95 NJA

ISSUE 4:
C/R 24295
R16 WAS 18ohm
NJA 11-7-95

ISSUE 5:
C/R 24474
R54 ADDED.
IC11 ROTATED.
C27 WAS 1u SMT ON SIDE 2.
NJA 20-2-96

ISSUE 6:
C/R 24583
REFER SHT 1.

ISSUE 7
VARIANT TABLE ADDED.
C/R 24797
JFB 18-11-96

ISSUE 8
ITEM 10 WAS 10 WAY x2.
D14 & R55 ADDED.
C/R 24910
BCL 10/3/97

ISSUE 9
TABLE RMV'D.
C/R 25082
09-07-97 MRU

ISSUE 10
ITEM 13 ADDED.
C/R 25026
25-08-97 BCL

ISSUE 11:
C/R 25155
REFER SHT 1.
GW 3-10-97

ISSUE 12:
C/R 25179
REFER SHT 1.
GW 6-11-97

FILE NAME
08\04964_18.DWG

PCB 07-01534-10

CODAN

MATERIAL

FINISH

			SCALE 2:1
DRN	PJL	DATE 10-02-94	
CHKD	NJA	10-02-94	
APPD	CM	08-02-95	

TOLERANCES UNLESS OTHERWISE STATED
2 PLACES DEC. ±0.25
1 PLACE DEC.
0 PLACE DEC.
ANGULAR

© CODAN PTY LTD, A.C.N. 007 590 605: 1994

TITLE
DISPLAY PANEL
THRU. HOLE ASSEMBLY

A2

DRAWING/DOC NO.
08-04964

ISS 18

SHT. 2 OF 2

DO NOT SCALE

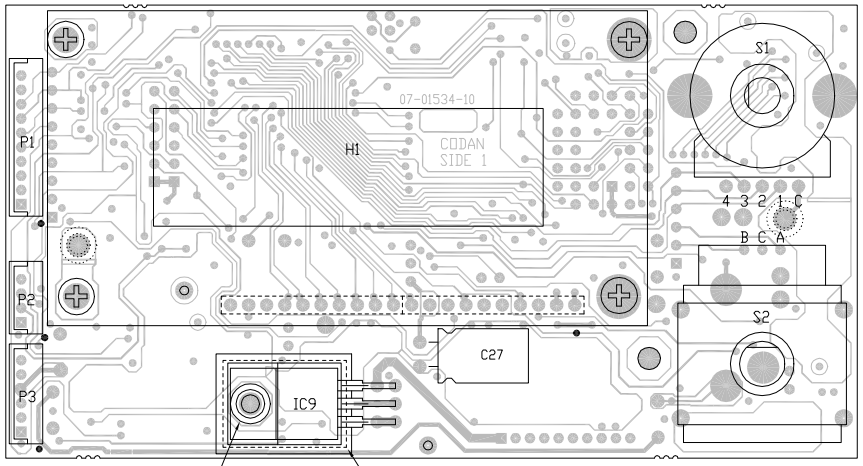

VIEW ON SIDE 1

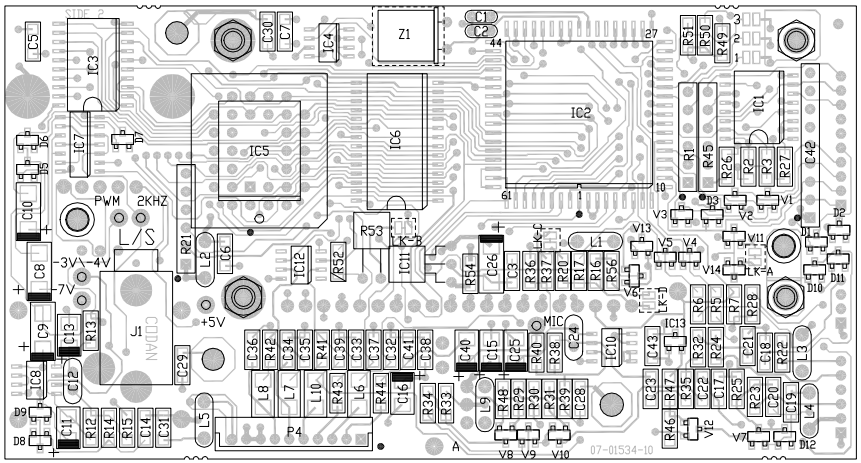

VIEW ON SIDE 2

NOTES
1. ALL UNMARKED DIODES ARE BAS16
2. CUT TRACKS AT LINKS A, B & C
AND SOLDER ACROSS LINK D (-003 ONLY).

ASSEMBLY	A	B	C	D	LINK	
08-04964-003	X	X	X	✓	LO PWR	SEE NOTE 2
OTHERS	✓	✓	✓	X	STD	

× = NOT ASSIGNED

ISSUE 14
C/R 25402

ISSUE 15
C/R 25724

ISSUE 16
C/R 25820

ISSUE 17
C23 WAS 1808 SIZE.
C/R 26022

ISSUE 18
LINK TABLE & NOTES ADDED.
C/R 26173

CHANGE REQUEST

ISSUE 2
C/R 24182
R52 & R53 ADDED
C/R 24216
DRG TITLE WAS CONTROL HEAD
NJA 4-4-95

ISSUE 3:
C/R 24270
PCB WAS ISSUE 4
C26 WAS 1u
22-5-95 NJA

ISSUE 4:
C/R 24295
R16 WAS 18ohm
NJA 11-7-95

ISSUE 5:
C/R 24474
R54 ADDED.
IC11 ROTATED.
C27 WAS 1u SMT ON SIDE 2.
NJA 20-2-96

ISSUE 6:
C/R 24583
V10 WAS BC858.
V8 WAS BCX20.
BCL 08-05-96

ISSUE 7
VARIANT TABLE ADDED.
C/R 24797
JFB 18-11-96

ISSUE 8
ITEM 10 WAS 10 WAY x2.
D14 & R55 ADDED.
C/R 24910
BCL 10/3/97

ISSUE 9
TABLE REMV'D.
C/R 25082
09-07-97 MRU

ISSUE 10
ITEM 13 ADDED.
C/R 25026
25-08-97 BCL

ISSUE 11:
C/R 25155
C4,D4,D13,D14,R8-R11 & R55 DELETED.
R7 WAS 10k.
IC13,R56,TP(RESET) & LK-A - LK-D ADDED.
PCB WAS ISSUE 7.
GW 3-10-97

ISSUE 12:
C/R 25179
REFS D3 & V2 SWAPPED. VALUES V8 & V10 SWAPPED.
VARIANT ADDED TO NOTE 2.
NOTES MOVED.
PCB WAS ISSUE 08.
LABEL ADDED TO RST TEST POINT.
GW 6-11-97

ISSUE 13
C/R 25368

FILE No.
08\04964_18.DWG

PCB 07-01534-10

TSM

CODAN

MATERIAL

FINISH

		SCALE 2:1
DRN	PJL	DATE 10-02-94
CHKD	NJA	10-02-94
APPD	CM	08-02-95

TOLERANCES UNLESS OTHERWISE STATED
2 PLACES DEC. ±0.25
1 PLACE DEC.
0 PLACE DEC.
ANGULAR

© CODAN PTY LTD, A.C.N. 007 590 605: 1994

TITLE
DISPLAY PANEL ASSEMBLY

A2

DRAWING/DOC NO.
08-04964

ISS 18

SHT. 1 OF 1

DO NOT SCALE

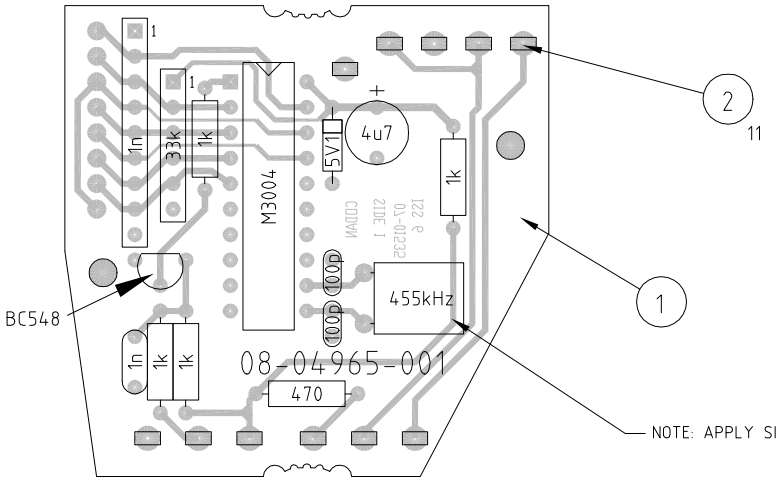

NOTE: APPLY SILICONE RTV TO ADHERE Z1 TO PCB

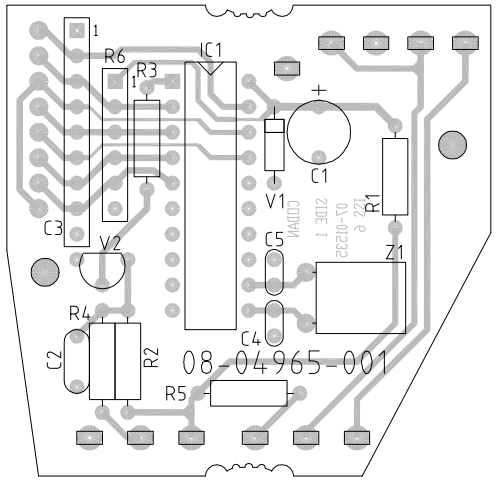

PCB 07-01535 ISSUE 6
ASSY P/No. 08-04965-001

CHANGE REQUEST
ISSUE B REDESIGNED C/R 24015 01-08-94
ISSUE C R5 ADDED, R1 MOVED. C/R 24074 06-10-94
ISSUE 1 R6 ADDED. C/R 24300 MJS 21-07-95
ISSUE 2 SILICONE NOTE ADDED. C/R 24451 C.M 29-1-96
ISSUE 3 08 PART NUMBER ADDED TO SCREENPRINT. PCB WAS ISSUE 2 C/R 24663 JFB 15-8-96

FILE No.
04965__3.DWG

CODAN

MATERIAL

FINISH

		SCALE 1:1
DRN	YC	DATE 01-08-94
CHKD	NJA	01-08-94
APPD	CM	25-07-95

TOLERANCES
UNLESS OTHERWISE STATED

2 PLACES DEC.	±0.25
1 PLACE DEC.	±0.5
0 PLACE DEC.	±1
ANGULAR	±2

© CODAN PTY LTD, A.C.N. 007 590 605: 1996

TITLE
MICROPHONE AND KEYBOARD ENCODER PCB, ASSEMBLY

A3

DRAWING/DOC NO.
08-04965

ISS ~~0~~ ~~1~~ ~~2~~ 3

SHT. 1 OF 1

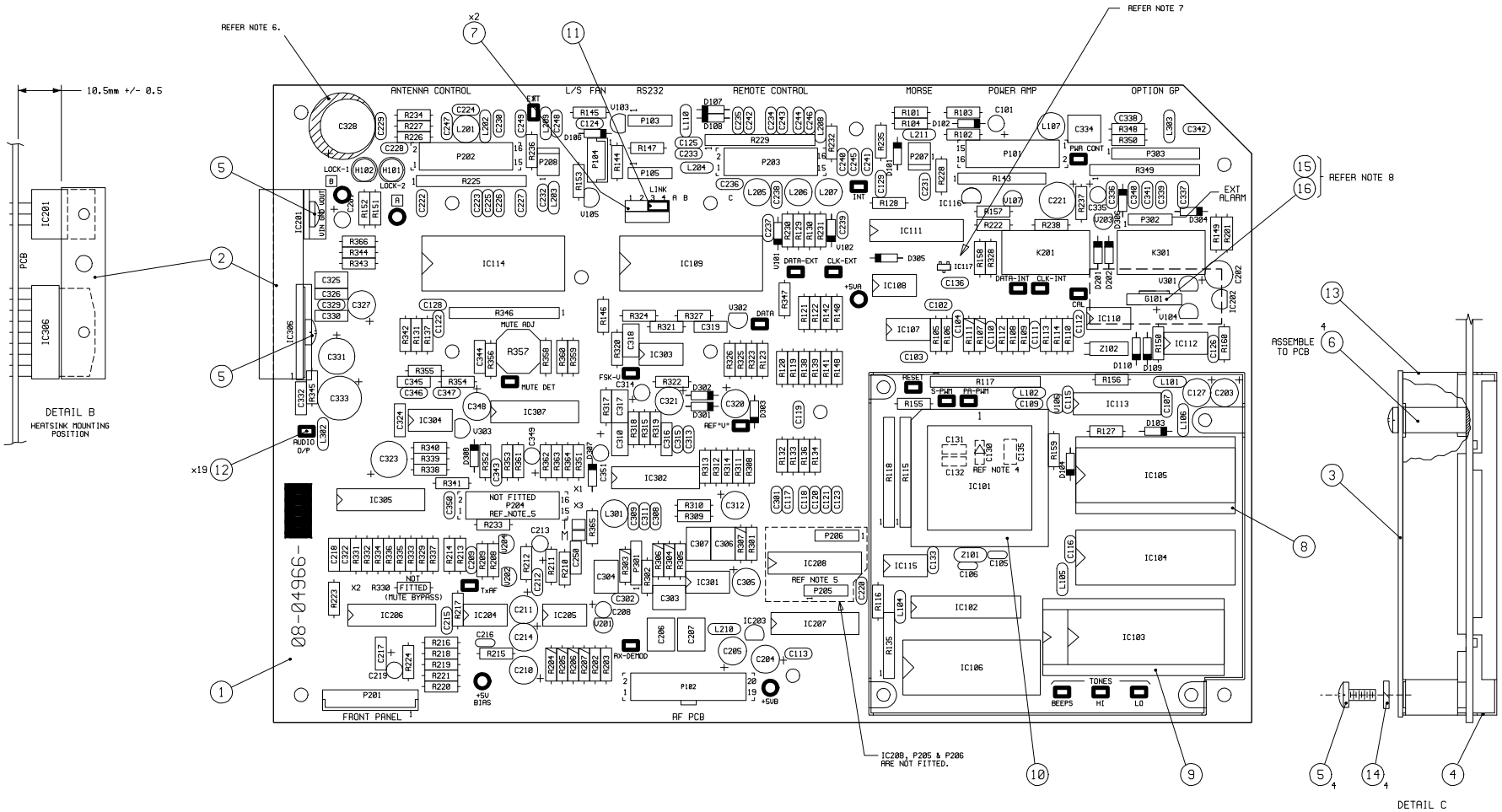

NOTES:

1. ALL DIODES BAW62 OR EQUIVALENT UNLESS OTHERWISE STATED.
2. FORM SHIELD WALL (ITEM 13) AND SOLDER IN PLACE.
3. SOLDER BOTTOM SHIELD (ITEM 4) IN PLACE AFTER TEST.
4. C130, C131, C132 & C135 TO BE SURFACE MOUNTED TO SIDE 1 AT POST WAVE SOLDER REFER DETAIL A.
5. MASK UNDERSIDE HOLES OF P204, P205, P206 & IC208 BEFORE WAVE SOLDERING.
6. CAPACITOR C328 (TOP LEFT HAND CORNER) TO BE SECURED WITH RTV SILICON AFTER SOLDERING.
7. IC117 TO BE SURFACE MOUNTED TO SIDE 2.
8. FIT A 15mm x 6mm RUBBER SLEEVE (ITEM 16) OVER BATTERY G101. PLACE A STRIP OF 12mm RUBBER FOAM TAPE (ITEM 15), OVER BATTERY LEGS ON SIDE 1 OF PCB.

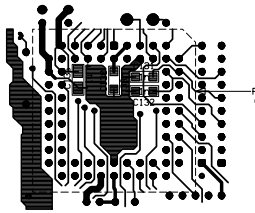

DETAIL A

PART VIEW OF SIDE 1 SHOWS POSITIONS OF C130, C131, C132 & C135

PCB 07-01536-11
ASSY P/No. 08-04966-001

CHANGE REQUEST

ISSUE B
DETAIL A ADDED. TO SHTS 1 & 2. C/R 23859
PCB WAS ISSUE 1
DETAIL B ADDED. TO SHTS 1 & 2. C/R 24015
NJA 11-11-94

ISSUE C
R218 WAS 10k
R219 WAS 100k
P207 ROTATED.
P201 CHANGED.
SOLDERMASK FOR BOTTOM SHIELD MODIFIED.
C/R 24176
MJS 25/1/95

ISSUE 2 20-3-95
C/R 24203 Y.C
R236,R237,C249,F ADDED. R237 WAS 100k.
C/R 24263 Y.C
R201 WAS 39.
CM 4-4-95

ISSUE 3
C/R 24276
R361 WAS 3k9
NJA 11-7-95

ISSUE 4
C/R 24474
R160(8k2),
C250(100n),
C351(1u) & LINKS 'M' & 'I' ADDED.
NJA 20-2-96

ISSUE 5
C/R 24594
R213 WAS 120k
R233 WAS 150k
MJS 6-5-96

ISSUE 6
C/R 24789
L103 DELETED.
R238(10R) ADDED.
31-10-96 NJA

ISSUE 7
D111 & R161 ADDED.
C/R 24813
NJA 22-11-96

ISSUE 8
PCB WAS ISS 7.
C/R 25023
NOTE 6 ADDED.
C/R 25022
13-06-97 BCL

ISSUE 9:
C/R 25122
C135(1u SMD) ADDED TO SIDE 1
NOTE 4 & DETAIL A AMENDED.
C/R 25026
ITEM 14 ADDED.
NJA 22-8-97

ISSUE 10:
C/R 25156
C114,D105,D111, R124-R126,R154 & R161 DELETED.
C136 & IC117 ADDED. NOTE 7
BCL 14-10-97

ISSUE 11:
C/R 25177
PCB WAS ISSUE 10
5-11-97 MAU

ISSUE 12
NOTE 8 ADDED.
ITEMS 15 & 16 ADDED.
C/R 25962
VS 9-3-99

FILE NAME 07\01536_11

CODAN		SCALE 2:1	© CODAN PTY LTD, A.C.N. 007 590 605, 1993
MATERIAL	DRN. I.T	DATE 18-11-93	MICROPROCESSOR & AUDIO ASSEMBLY
	CHKD. NJA	15-2-94	
FINISH	APPD. C.M	8-2-95	A1 DRAWING/DOC No. 08-04966
	TOLERANCES UNLESS OTHERWISE STATED 2 PLACES DEC ± 1 PLACE DEC ± ANGULAR ±		ISS 10 11 12 — SHT 1 OF 2

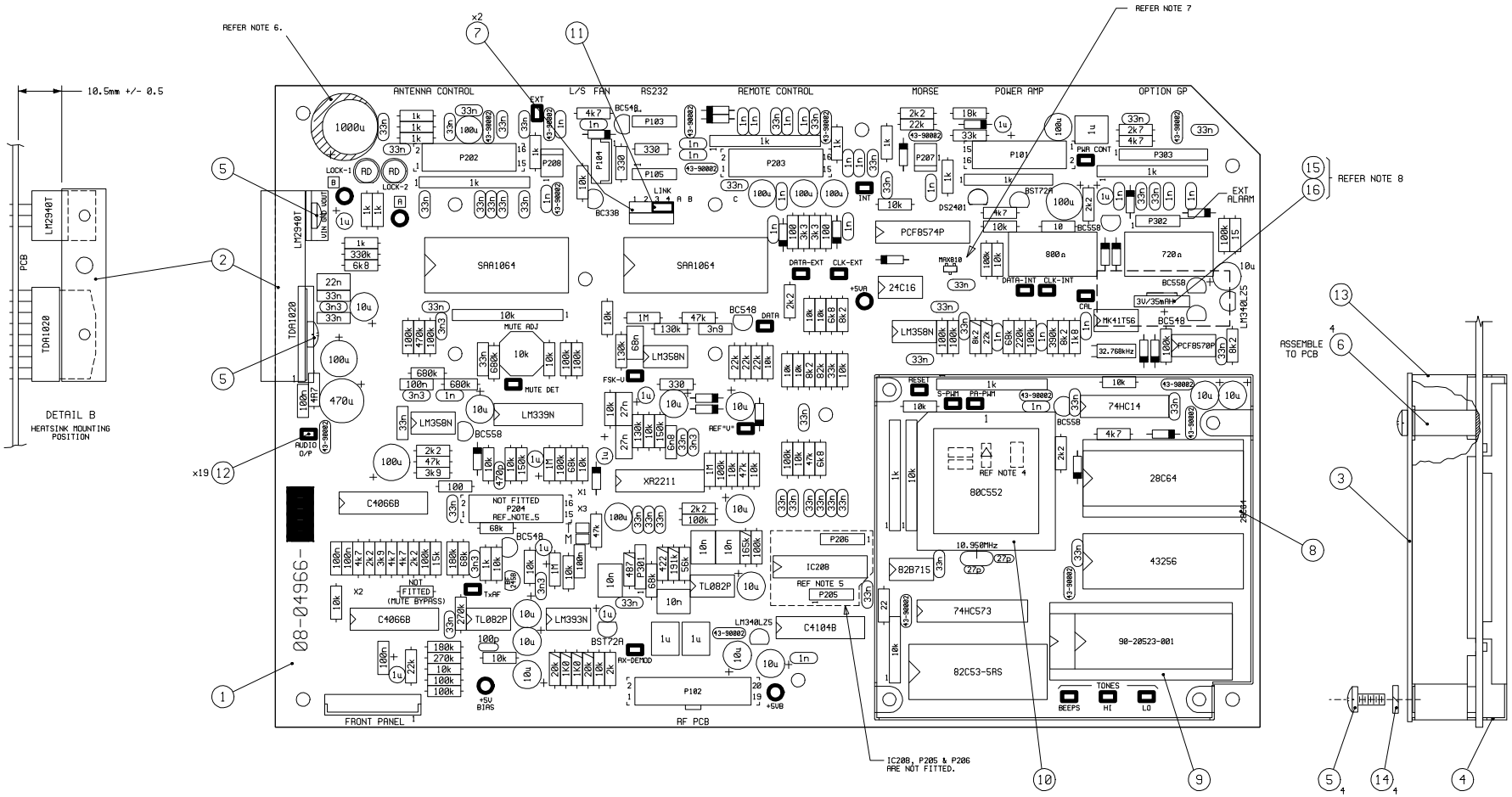

NOTES:

1. ALL DIODES BAW62 OR EQUIVALENT UNLESS OTHERWISE STATED.
2. FORM SHIELD WALL (ITEM 13) AND SOLDER IN PLACE.
3. SOLDER BOTTOM SHIELD (ITEM 4) IN PLACE AFTER TEST.
4. C130, C131, C132 & C135 TO BE SURFACE MOUNTED TO SIDE 1 AT POST WAVE SOLDER REFER DETAIL A.
5. MASK UNDERSIDE HOLES OF P204, P205, P206 & IC208 BEFORE WAVE SOLDERING.
6. CAPACITOR C328 (TOP LEFT HAND CORNER) TO BE SECURED WITH RTV SILICON AFTER SOLDERING.
7. IC117 TO BE SURFACE MOUNTED TO SIDE 2.
8. FIT A 15mm x 6mm RUBBER SLEEVE (ITEM 16) OVER BATTERY G101. PLACE A STRIP OF 12mm RUBBER FOAM TAPE (ITEM 15), OVER BATTERY LEGS ON SIDE 1 OF PCB.

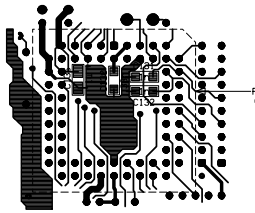

DETAIL A

PART VIEW OF SIDE 1 SHOWS POSITIONS OF C130, C131, C132 & C135

PCB 07-01536-11
ASSY P/No. 08-04966-001

CHANGE REQUEST

ISSUE B
DETAIL A ADDED. TO SHTS 1 & 2. C/R 23859
PCB WAS ISSUE 1
DETAIL B ADDED. TO SHTS 1 & 2. C/R 24015
NJA 11-11-94

ISSUE C
R218 WAS 10k
R219 WAS 100k
P207 ROTATED.
P201 CHANGED.
SOLDERMASK FOR BOTTOM SHIELD MODIFIED.
C/R 24176
MJS 25/1/95

ISSUE 2 20-3-95
C/R 24203 Y.C
R236,R237,C249,F ADDED. R237 WAS 100k.
C/R 24263 Y.C
R201 WAS 39.
CM 4-4-95

ISSUE 3
C/R 24276
R361 WAS 3k9
NJA 11-7-95

ISSUE 4
C/R 24474
R160(8k2), C250(100n), C351(1u) & LINKS 'M' & 'I' ADDED.
NJA 20-2-96

ISSUE 5
C/R 24594
R213 WAS 120k
R233 WAS 150k
MJS 6-5-96

ISSUE 6
C/R 24789
L103 DELETED.
R238(10R) ADDED.
31-10-96 NJA

ISSUE 7
D111 & R161 ADDED.
C/R 24813
NJA 22-11-96

ISSUE 8
PCB WAS ISS 7.
C/R 25023
NOTE 6 ADDED.
C/R 25022
13-06-97 BCL

ISSUE 9:
C/R 25122
C135(1u SMD) ADDED TO SIDE 1
NOTE 4 & DETAIL A AMENDED.
C/R 25026
ITEM 14 ADDED.
NJA 22-8-97

ISSUE 10:
C/R 25156
C114,D105,D111, R124-R126,R154 & R161 DELETED.
C136 & IC117 ADDED.
BCL 14-10-97

ISSUE 11:
C/R 25177
PCB WAS ISSUE 10
5-11-97 MAU

ISSUE 12
NOTE 8 ADDED.
ITEMS 15 & 16 ADDED.
C/R 25962
VS 9-3-99

FILE NAME 07\01536_11

CODAN		SCALE 2:1	© CODAN PTY LTD, A.C.N. 007 590 605, 1993
MATERIAL	DRN. I.T	DATE 18-11-93	MICROPROCESSOR & AUDIO ASSEMBLY
	CHKD. NJA	15-2-94	
FINISH	APPD. C.M	8-2-95	A1 DRAWING/DOC No. 08-04966
	TOLERANCES UNLESS OTHERWISE STATED 2 PLACES DEC ± 1 PLACE DEC ± ANGULAR ±		ISS 10 11 12 SHT 2 OF 2

DO NOT SCALE

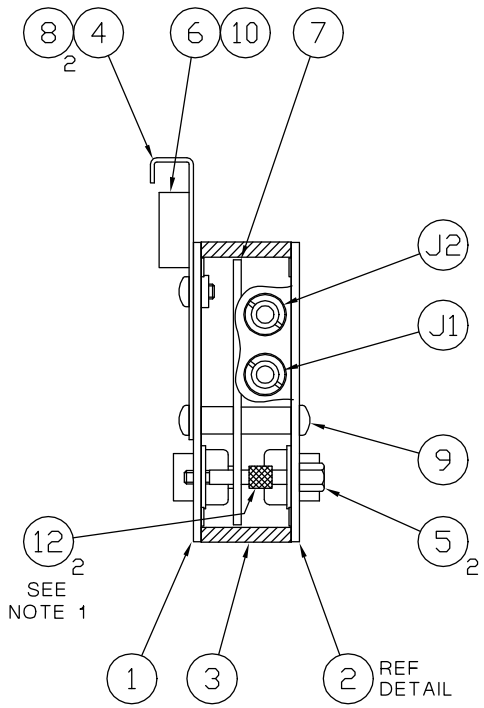

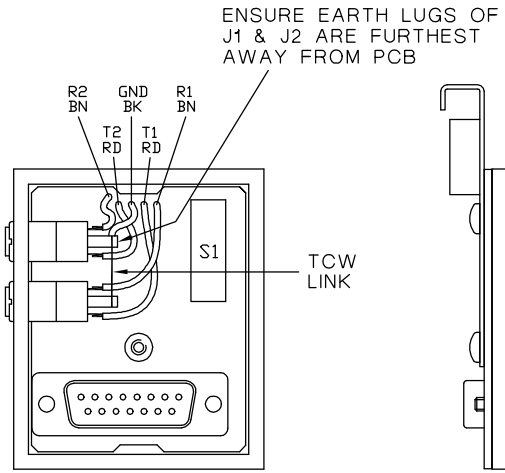

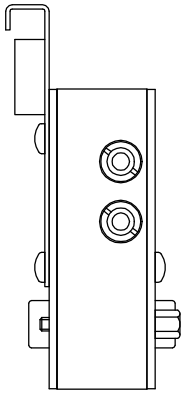

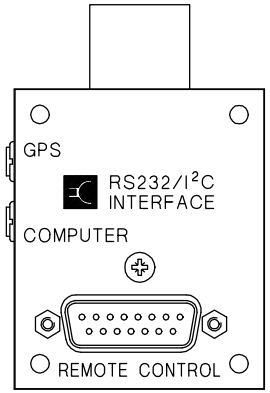

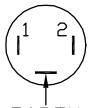

J1 & J2
TERMINATIONS

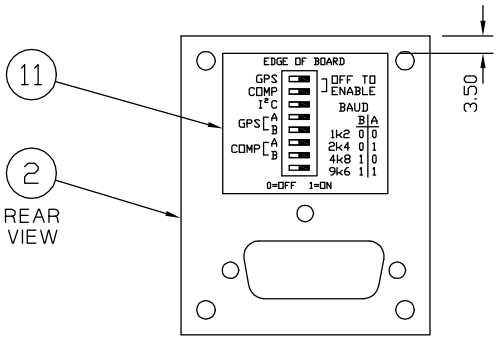

NOTES:

1. CUT ITEM 12 TO PROVIDE 2 x 5mm LONG SLEEVES AND FIT TO ITEM 5

WIRE		FROM	TO
BROWN	66-03072-001	PCB/R1	J1/1
RED	" -002	" /T1	J1/2
BLACK	" -000	" /GND	J2/ETH
BROWN	" -001	" /R2	J2/1
RED	" -002	" /T2	J2/2
TCW		J2/ETH	J1/ETH

DIMENSIONS IN mm

ISSUE 2
'D' CONNECTORS MOVED,
ITEM 13 ADDED.
C/R 24342
EF 13-9-95

ISSUE 3
NOTE 1 ADDED
ITEM 14 ADDED
C/R 24532
CE 16-09-96

ISSUE 4:
SHT 2 CHANGED TO 08-05747.
J1 WAS J2. J2 WAS J3.
ITEM 10 WAS 11
ITEM 11 WAS 13
ITEM 12 WAS 14
C/R 26108
VS 28-5-99

FILE No.
08\05181X_4.DWG

CODAN

MATERIAL

FINISH

		SCALE 1:1
DRN	DB	DATE 22-06-95
CHKD	EF	27-06-95
APPD	CM	11-07-95

TOLERANCES UNLESS OTHERWISE STATED
2 PLACES DEC. ±0.25
1 PLACE DEC. ±0.5
0 PLACE DEC. ±1
ANGULAR ±2°

© CODAN PTY LTD, A.C.N. 007 590 605: 1996

TITLE
RS232/I²C
INTERFACE
FINAL ASSY

A3

DRAWING/DOC NO.
08-05181

ISS 1 2 3 4

SHT. 1 OF 1

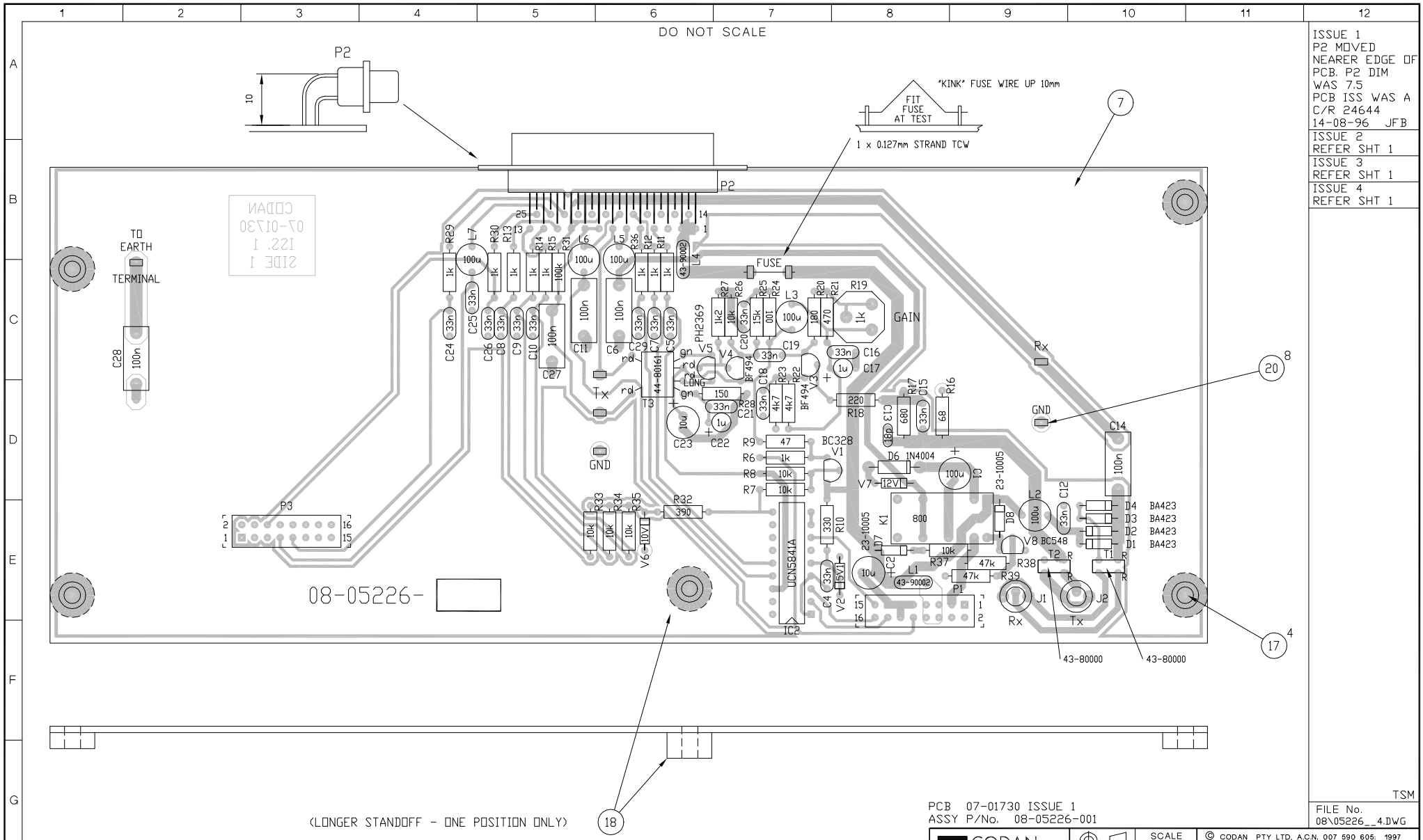

ISSUE 1
P2 MOVED NEARER EDGE OF PCB. P2 DIM WAS 7.5
PCB ISS WAS A
C/R 24644
14-08-96 JFB

ISSUE 2
REFER SHT 1

ISSUE 3
REFER SHT 1

ISSUE 4
REFER SHT 1

TSM

FILE No.
08\05226__4.DWG

PCB 07-01730 ISSUE 1
ASSY P/No. 08-05226-001

DIMENSIONS IN mm

CODAN

MATERIAL

FINISH

SCALE		2:1
DRN	ILT	DATE 20-10-95
CHKD	MJS	01-02-96
APPD	JFB	14-08-96

TOLERANCES UNLESS OTHERWISE STATED

2 PLACES DEC.	±0.25
1 PLACE DEC.	±0.5
0 PLACE DEC.	±1
ANGULAR	±2°

© CODAN PTY LTD. A.C.N. 007 590 605. 1997

TITLE
PA/EXCITER
INTERFACE ASSEMBLY

A2

DRAWING/DOC NO.
08-05226

ISS ~~1~~ ~~2~~ ~~3~~ 4

SHT. 1 OF 1

DO NOT SCALE

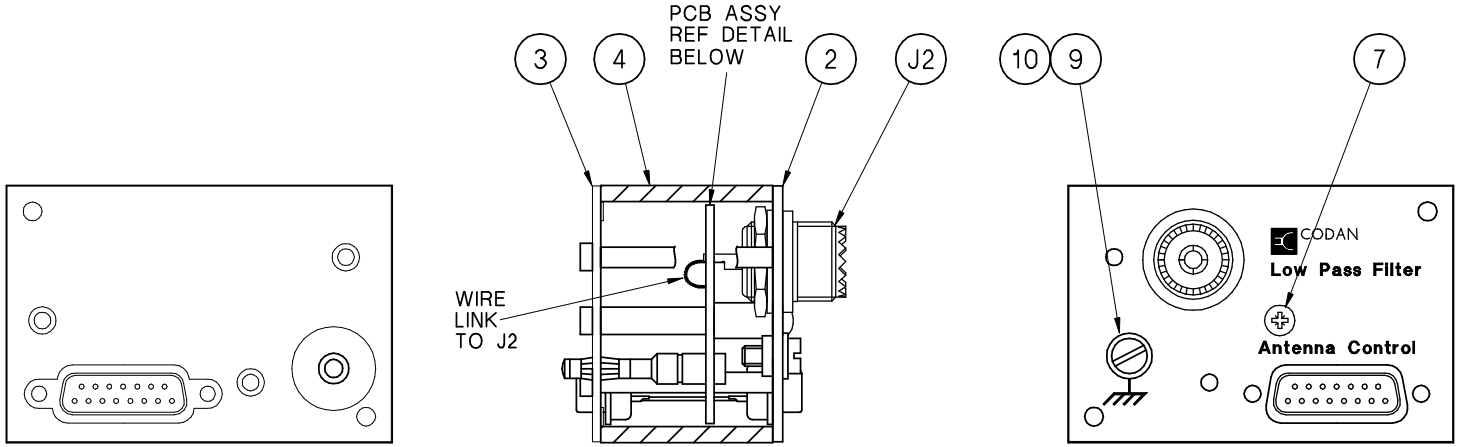

NOTES
1. ITEMS 6 & 12 SUPPLIED SEPARATELY TO CUSTOMISING FOR FITTING OF UNIT TO TRANSCEIVER.

CHANGE REQUEST
ISSUE B REFER SHT 2
ISSUE C ITEMS 7&9 DELETED. C/R 24682 JFB 05-08-96
ISSUE 2 REF. SHT 2
ISSUE 3 REF. SHT 2
ISSUE 4 REF. SHT 2 C/R 26476 1-3-2000 HKJ

FILE NAME
08\05227XAR.DWG

CODAN

MATERIAL

1234567

FINISH

		SCALE 1:1
DRN	DB	DATE 08-12-95
CHKD	EF	21-12-95
APPD	JFB	12-8-96

TOLERANCES UNLESS OTHERWISE STATED

2 PLACES DEC.	±0.25
1 PLACE DEC.	±0.5
0 PLACE DEC.	±1
ANGULAR	±2

© CODAN PTY LTD, A.C.N. 007 590 605 1995

TITLE
FILTER, LOW PASS (1.6MHz)
FINAL ASSEMBLY

A3

DRAWING/DOC NO.
08-05227

ISS 4

SHT. 1 OF 2

DO NOT SCALE

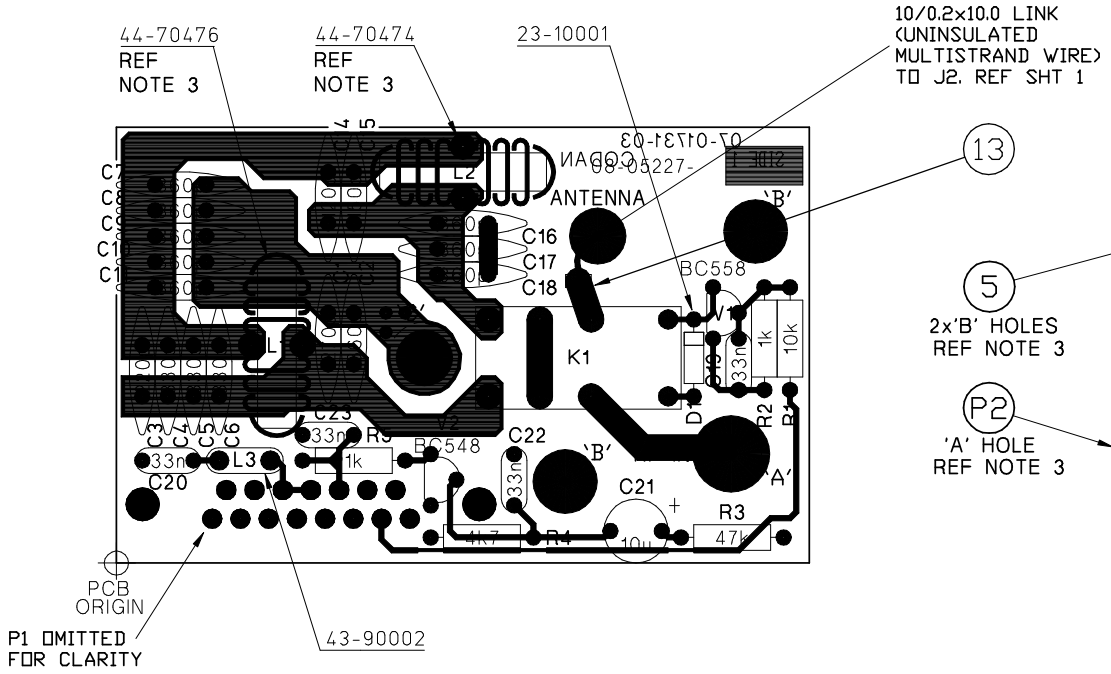

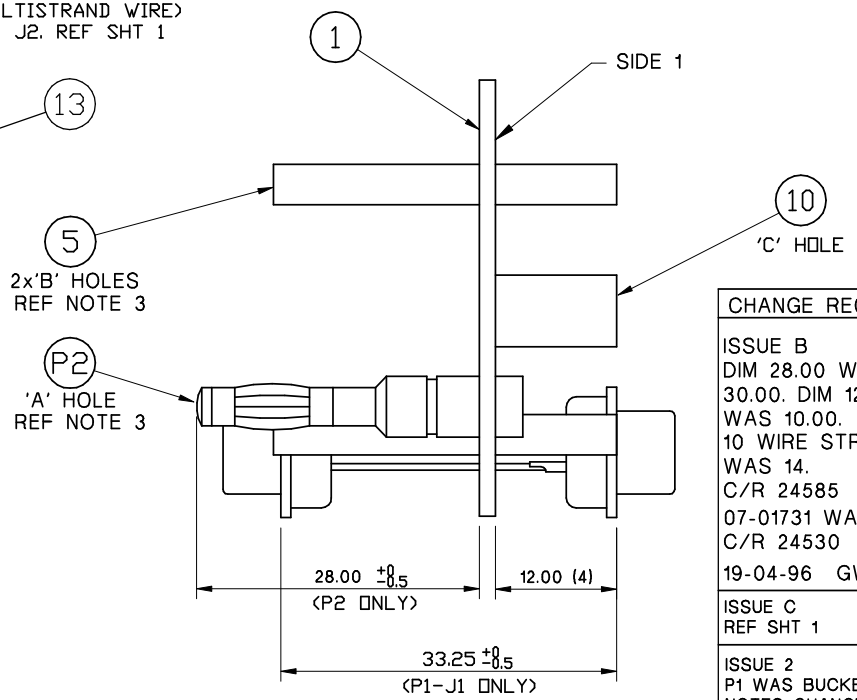

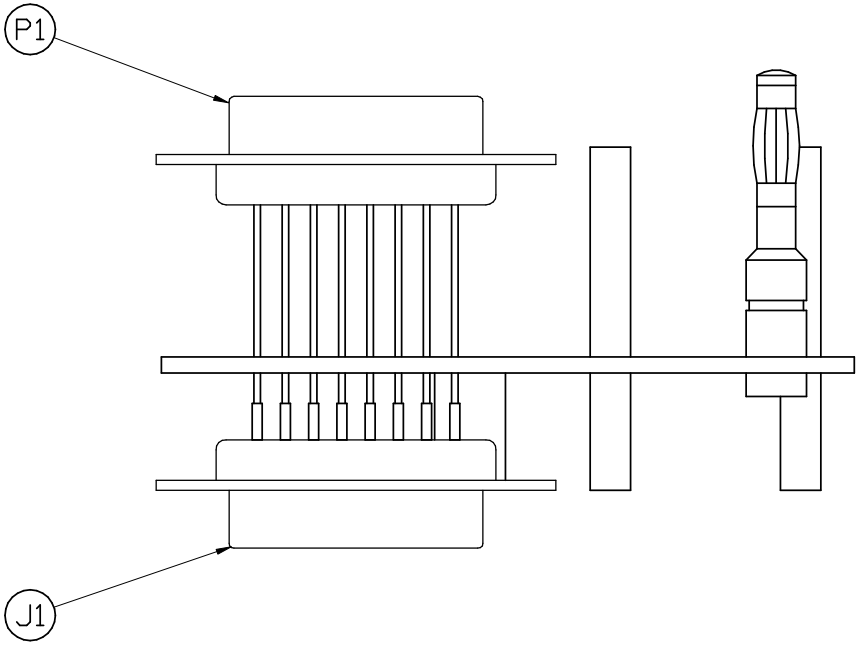

NOTES:

1. ENSURE ITEMS J1, P1, P2 5 & 10 ARE AT RIGHT ANGLE TO THE PCB.
2. SOLDER ITEM 5 AND P2, ALSO SECURE L1, L2 WITH JETMELT.
3. ASSEMBLE J1, P1 USING ASSEMBLY FIXTURE CHECK HEIGHTS AS PER DIMENSIONS.

CHANGE REQUEST
ISSUE B DIM 28.00 WAS 30.00. DIM 12.00 WAS 10.00. 10 WIRE STRANDS WAS 14. C/R 24585 07-01731 WAS ISS1. C/R 24530 19-04-96 GW
ISSUE C REF SHT 1
ISSUE 2 P1 WAS BUCKET SOLD. NOTES CHANGED. C/R 24814 06-05-97 BCL
ISSUE 3 PCB No WAS 07-01731-03 C/R 26180 6-7-99 AC
ISSUE 4 HIDDEN LINE ADDED FOR ITEM 10 AT "C" HOLE.
FILE NAME 08\05227XAR.DWG

07-01731-04

CODAN

MATERIAL

FINISH

		SCALE 2:1
DRN	DB	DATE 07-12-95
CHKD	EF	20-12-95
APPD	JFB	12-8-96

TOLERANCES UNLESS OTHERWISE STATED

2 PLACES DEC.	±0.25
1 PLACE DEC.	±0.5
0 PLACE DEC.	±1
ANGULAR	±2

© CODAN PTY LTD, A.C.N. 007 590 605: 1995

TITLE

FILTER, LOW PASS (1.6MHz)
PCB ASSEMBLY

A3

DRAWING/DOC NO.

08-05227

ISS 4

SHT. 2 OF 2

DO NOT SCALE

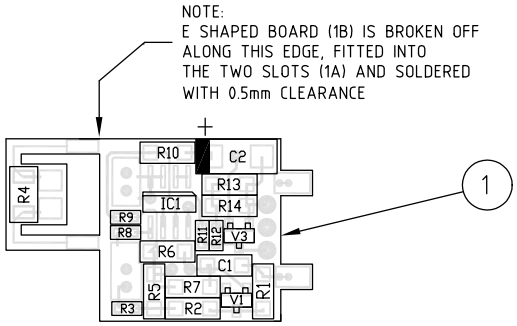

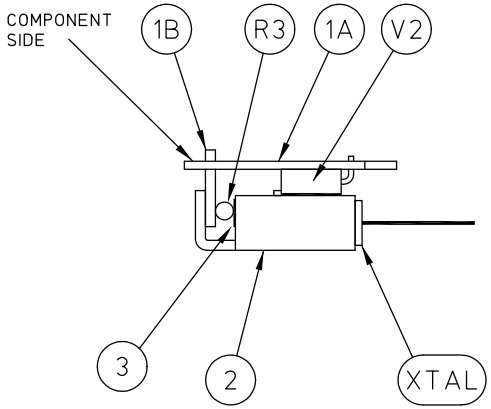

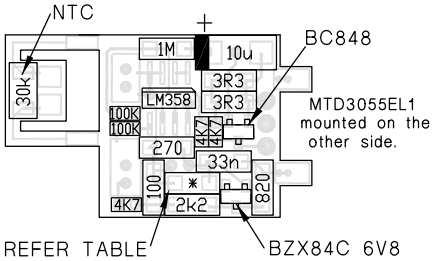

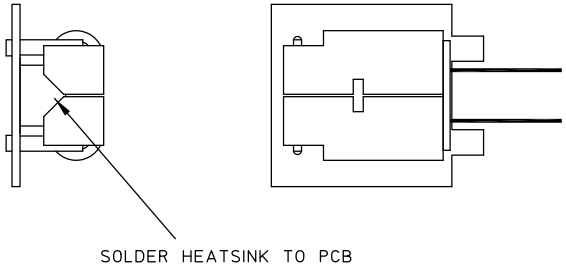

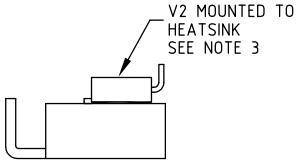

PCB 07-01732-04

NOTES:

1. E-SHAPED BOARD IS FITTED USING 75-80602.
2. V2 LEADS ARE PREFORMED USING 75-80601.
3. V2 IS MOUNTED TO HEATSINK USING 75-80600.
4. CARE MUST BE TAKEN TO AVOID EXCESS HEAT AS THIS CAN CAUSE HEATSINK TO COLLAPSE.

VERSION	R7
08-05235-001	220
08-05235-002	150

CHANGE REQUEST

ISSUE B
V1 WAS BCX20
C/R 24530
NJA 22-05-96

ISSUE C
C3 POLARITY ADDED.
C/R 24658
BCL 08-07-96

ISSUE 2
R9 WAS 270K
R1 WAS 4K7
R15, V3 ADDED.
C/R 24987
04-07-97 MJS

ISSUE 3
PCB SHORTENED,
COMPS RENUMB'RD
TABLE ADDED.
C/R 25721
09-11-98 RRU

ISSUE 4
NOTES 1-4 ADDED.
VIEW ADDED SHOWING V2 MOUNTED TO HEATSINK.
C/R 25886
13-198 PMK

ISSUE 5:
PCB WAS ISS -03
C/R 26392
GDD 21/12/99

FILE NAME
08\05235__5.DWG

CODAN

MATERIAL

FINISH

SCALE 2:1		
DRN	DB	DATE 09-01-96
CHKD	EF	26-02-96
APPD	JFB	30-09-96

TOLERANCES UNLESS OTHERWISE STATED
2 PLACES DEC. ±0.25
1 PLACE DEC. ±0.5
0 PLACE DEC. ±1
ANGULAR ±2

© CODAN PTY LTD, A.C.N. 007 590 605: 1995

TITLE
CRYSTAL OVEN
FINAL ASSEMBLY

A3

DRAWING/DOC NO.
08-05235

ISS										
B	C	1	2	3	4	5				

SHT. 1 OF 1

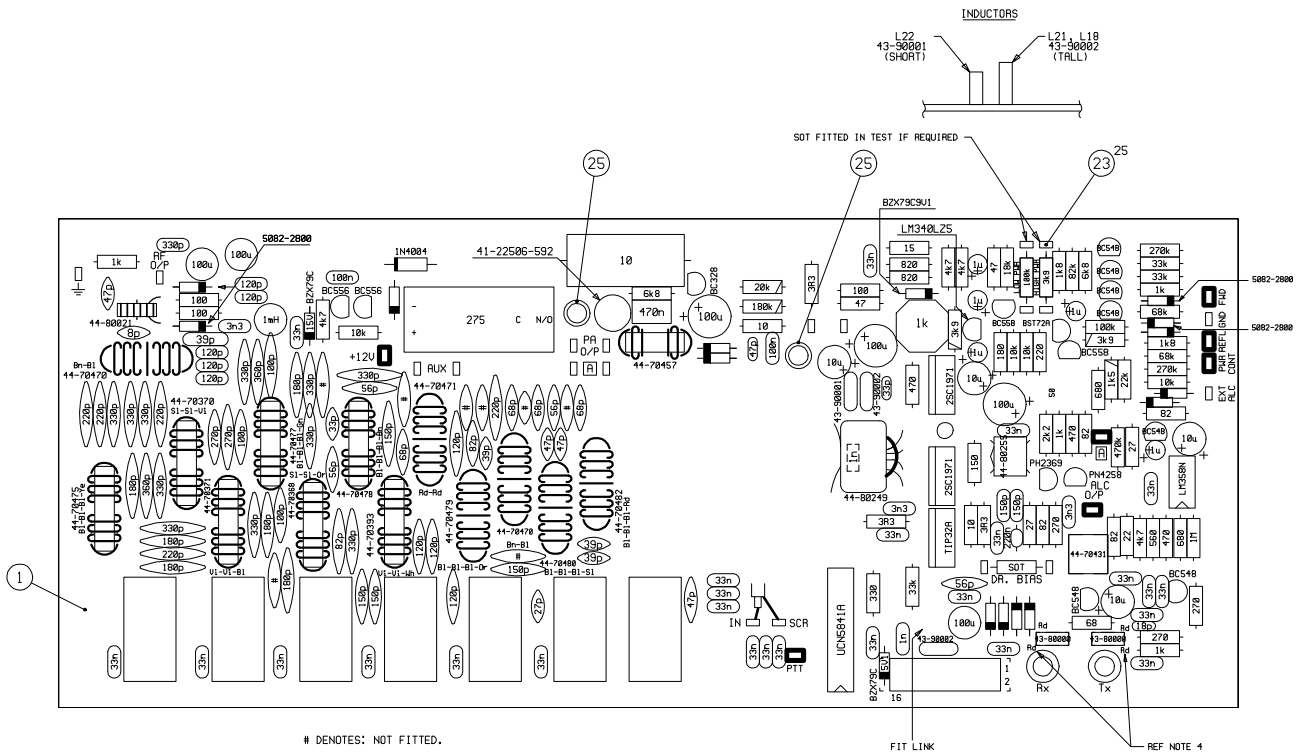

DENOTES: NOT FITTED.

NOTES:
1. RESISTORS SHOWN ▭ ARE 2%
2. SECURE ALL TOROIDAL INDUCTORS TO PCB, USING JET MELT.
3. DIODES ARE 23-10001, OR EQUIVALENT, UNLESS OTHERWISE STATED.
4. ASSEMBLE L24 & L25 WITH RED WIRES AS SHOWN.

PCB 07-01778-05
ASSY 08-05237-001

CHANGE REQUEST

ISSUE B:
C/R 24547
L14 WAS 44-70481
NJA 15-5-96

ISSUE 1:
C/R 24691
L13 WAS 44-70460
L14 CODE WAS
B1-B1-B1-V1
DETAIL D: V21 &
V22 WERE MAF260
NJA 12-8-96

ISSUE 2:
C/R 24686
C/R 24779
PCB WAS 07-01533
ISSUE 6.
NOTE 5 (SHT 3)
CHANGED.
8-1-97 ARU

ISSUE 3:
C/R 24945
PCB WAS ISS. 1
C9,C49,C50 & V2
MOVED. DETAIL E
SHOWED MAF260
25-3-97 NJA

ISSUE 4:
PCB NOW
07-01778-03
C/R 25147
11-09-97 BCL

ISSUE 5
R34 ROTATED.
PCB WAS -03
C/R 25329
13-05-98 NJA

ISSUE 6:
T4 ASSY MOVED
PCB WAS ISS -04
C/R 25539
ITEM 9 DELETED.
C/R 25542
C1 MOVED
C/R 25585
PB 28-9-98

FILE NAME
07\1778_5

CODAN

MATERIAL

FINISH

DRN.	C G	DATE 17-11-95	SCALE 2:1
CHKD.	NJA	20-2-96	
APPD.	NJA	12-8-96	

TOLERANCES UNLESS OTHERWISE STATED
2 PLACES DEC ±
1 PLACE DEC ±
ANGULAR ±

© CODAN PTY LTD, A.C.N. 007 590 605, 1995

PA & FILTER (30MHz)
PCB
ASSEMBLY

A1 DRAWING/DOC No. 08-05237

ISS 1 2 3 4 5 6 SHT 1 OF 3

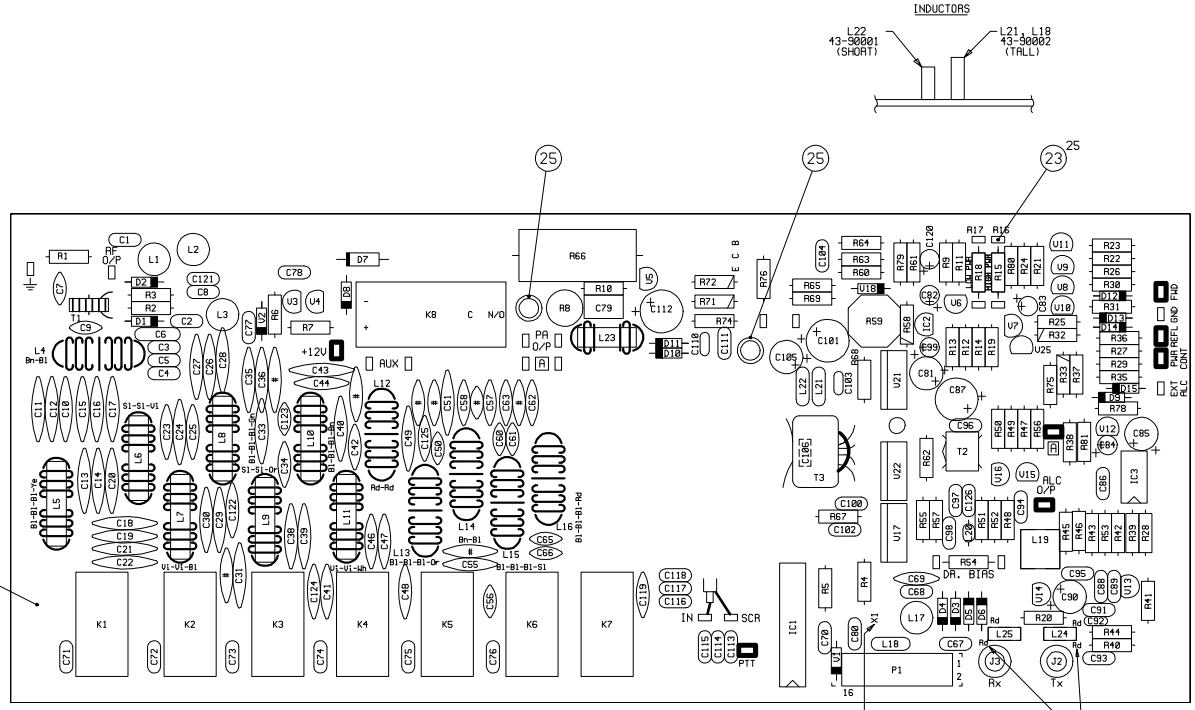

DENOTES: NOT FITTED.

NOTES:
1. RESISTORS SHOWN ▭ ARE 2%
2. SECURE ALL TOROIDAL INDUCTORS TO PCB, USING JET MELT.
3. DIODES ARE 23-10001, OR EQUIVALENT, UNLESS OTHERWISE STATED.
4. ASSEMBLE L24 & L25 WITH RED WIRES AS SHOWN.

PCB 07-01778-05
ASSY 08-05237-001

CHANGE REQUEST

ISSUE B:
C/R 24547
L14 WAS 44-70481
NJA 15-5-96

ISSUE 1:
C/R 24691
L13 WAS 44-70460
L14 CODE WAS
Bl-Bl-Bl-Vl
DETAIL D: V21 &
V22 WERE MAF260
NJA 12-8-96

ISSUE 2:
C/R 24686
C/R 24779
PCB WAS 07-01533
ISSUE 6.
NOTE 5 (SHT 3)
CHANGED.
8-1-97 ARU

ISSUE 3:
C/R 24945
PCB WAS ISS. 1
C9,C49,C50 & V2
MOVED. DETAIL E
SHOWED MAF260
25-3-97 NJA

ISSUE 4:
PCB NOW
07-01778-03
C/R 25147
11-09-97 BCL

ISSUE 5
R34 ROTATED.
PCB WAS -03
C/R 25329
13-05-98 NJA

ISSUE 6:
T4 ASSY MOVED
PCB WAS ISS -04
C/R 25539
ITEM 9 DELETED.
C/R 25542
C1 MOVED
C/R 25585
PB 28-9-98

FILE NAME
07\1778_5

CODAN

MATERIAL

FINISH

		SCALE 2:1
DRN.	C G	DATE 17-11-95
CHKD.	NJA	20-2-96
APPD.	NJA	12-8-96

TOLERANCES UNLESS OTHERWISE STATED
2 PLACES DEC ±
1 PLACE DEC ±
ANGULAR ±

© CODAN PTY LTD, A.C.N. 007 590 605, 1995

PA & FILTER (30MHz)
PCB
ASSEMBLY

A1 DRAWING/DOC No. 08-05237

ISS 1 2 3 4 5 6 SHT 2 OF 3

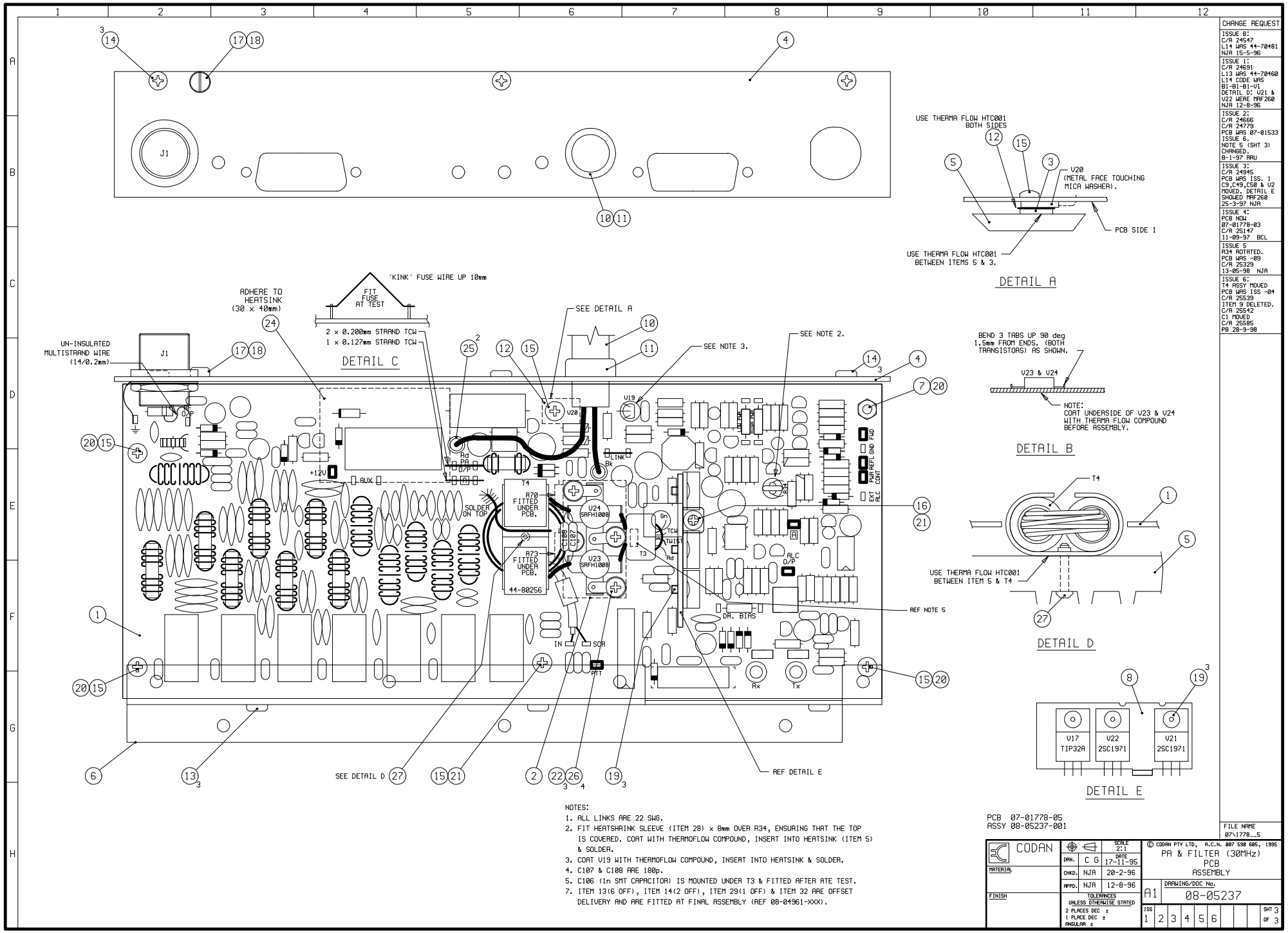

NOTES:

1. ALL LINKS ARE 22 SWG.
2. FIT HEATSHRINK SLEEVE (ITEM 28) x 8mm OVER R34, ENSURING THAT THE TOP IS COVERED. COAT WITH THERMOFLOW COMPOUND, INSERT INTO HEATSINK (ITEM 5) & SOLDER.
3. COAT V19 WITH THERMOFLOW COMPOUND, INSERT INTO HEATSINK & SOLDER.
4. C107 & C108 ARE 180p.
5. C106 (1n SMT CAPACITOR) IS MOUNTED UNDER T3 & FITTED AFTER ATE TEST.
7. ITEM 13(6 OFF), ITEM 14(2 OFF), ITEM 29(1 OFF) & ITEM 32 ARE OFFSET DELIVERY AND ARE FITTED AT FINAL ASSEMBLY (REF 08-04961-XXX).

PCB 07-01778-05
ASSY 08-05237-001

CHANGE REQUEST

ISSUE B:
C/R 24547
L14 WAS 44-70481
NJA 15-5-96

ISSUE I:
C/R 24691
L13 WAS 44-70460
L14 CODE WAS
B1-B1-B1-V1
DETAIL D: V21 & V22 WERE MAF260
NJA 12-8-96

ISSUE J:
C/R 24686
C/R 24779
PCB WAS 07-01533
ISSUE G.
NOTE 5 (SHT 3) CHANGED.
8-1-97 ARU

ISSUE 3:
C/R 24945
PCB WAS ISS. 1
C9,C49,C50 & V2 MOVED. DETAIL E SHOWED MAF260
25-3-97 NJA

ISSUE 4:
PCB NOW 07-01778-03
C/R 25147
11-09-97 BCL

ISSUE 5
R34 ROTATED.
PCB WAS -03
C/R 25329
13-05-98 NJA

ISSUE 6:
T4 ASSY MOVED
PCB WAS ISS -04
C/R 25539
ITEM 9 DELETED.
C/R 25542
C1 MOVED
C/R 25585
PB 28-9-98

FILE NAME 07\1778...5

CODAN

MATERIAL

FINISH

		SCALE 2:1
DRN.	C G	DATE 17-11-95
CHKD.	NJA	20-2-96
APPD.	NJA	12-8-96

TOLERANCES UNLESS OTHERWISE STATED
2 PLACES DEC ±
1 PLACE DEC ±
ANGULAR ±

© CODAN PTY LTD, A.C.N. 007 590 605, 1995

PA & FILTER (30MHz) PCB ASSEMBLY

A1 DRAWING/DOC No. 08-05237

ISS 1 2 3 4 5 6 SHT 3 OF 3

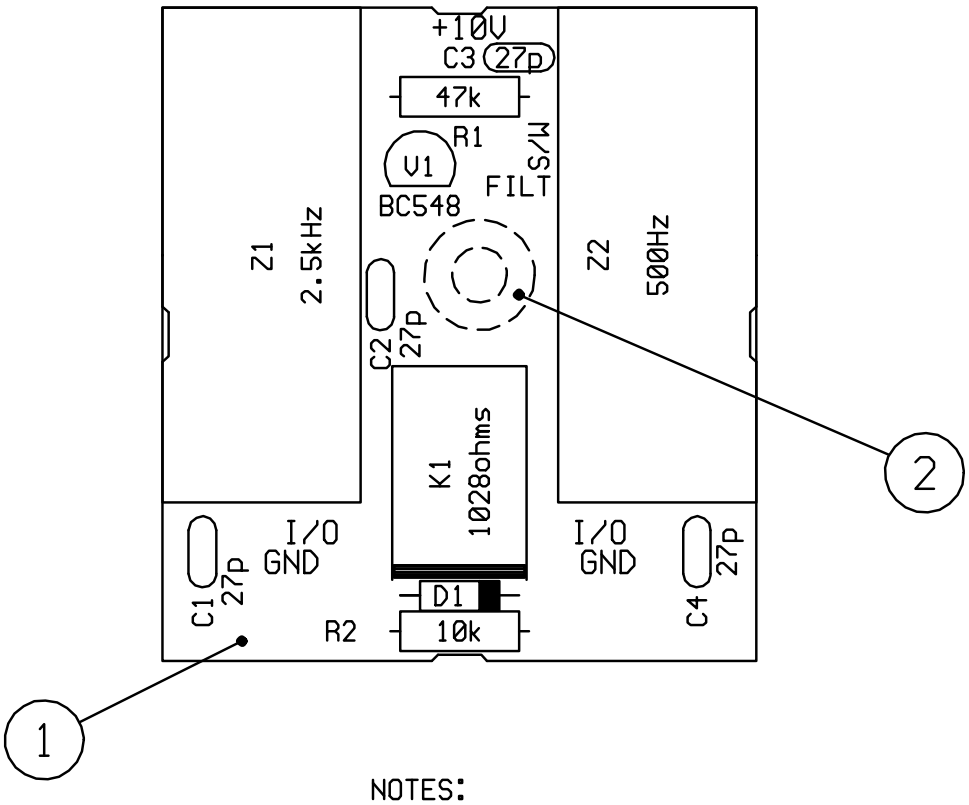

NOTES:
1. DIODE IS BAW62, OR EQUIVALENT.

PCB 07-01738, ISSUE A
ASSY P/No. 08-05259-001

FILE NAME
07\01738__1.PCB

ISSSUE CHANGE	
ISSUE B: CR 24510 R1 WAS 10k. NJA 27-2-96	

CODAN

MATERIAL

FINISH

		SCALE 2:1
DRN.	C G	DATE 9-2-96
CHKD.	NJA	15-2-96
APPD.	JFB	29-07-96

TOLERANCES UNLESS OTHERWISE STATED
2 PLACES DEC ±
1 PLACE DEC ±
ANGULAR ±

© CODAN PTY LTD, A.C.N. 007 590 605, 1996

500Hz FILTER SWITCH ASSEMBLY

A4

DRAWING/DOC No.
08-05259

ISS									SHT
A	B	1							1

DO NOT SCALE

NOTES:
1. ADHERE Z1,Z2 & Z3 TO PCB USING CLEAR RTV(ITEM 4).
2. × DENOTES NOT NORMALLY FITTED.

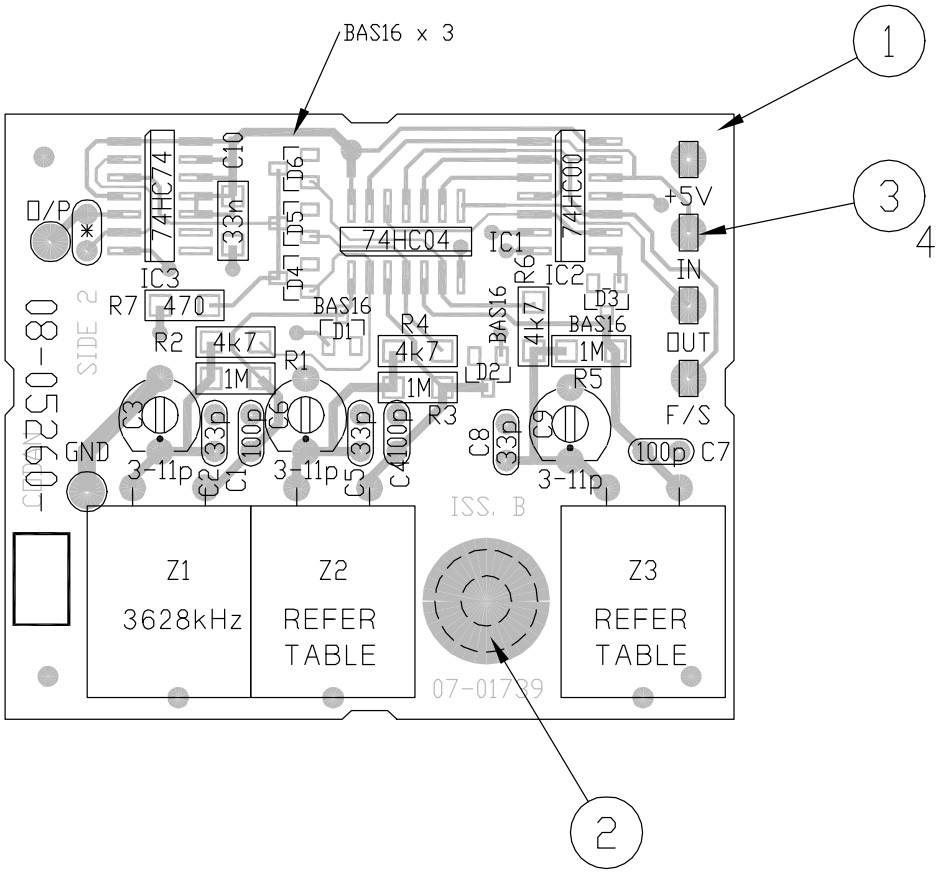

ASSY P/No.	Z2	Z3
08-05260-001	3653.6 kHz	3626.4 kHz
08-05260-002	3647.2 kHz	3632.8 kHz

PCB 07-01739 ISSUE B

ISSUE B C/R 24510 Z1-Z3 WERE QC41 STYLE, +5V WAS +10V LOUPOTS, NOTES ADDED, 22-02-96 NJA	ISSUE 2 VARIANT TABLE ADDED FOR Z2-Z3, C/R 24982 10-04-97 NJA

FILE No.
08\05260__2.DWG

CODAN

MATERIAL

FINISH

		SCALE 2:1
DRN	CG	DATE 09-02-96
CHKD	NJA	15-02-96
APPD	JFB	19-07-96

TOLERANCES
UNLESS OTHERWISE STATED

2 PLACES DEC.	±0.25
1 PLACE DEC.	±0.5
0 PLACE DEC.	±1
ANGULAR	±2°

© CODAN PTY LTD, A.C.N. 007 590 605: 1997

TITLE
500Hz FILTER LOCAL OSC.
SWITCH ASSEMBLY

A4

DRAWING/DOC NO.
08-05260

ISS									
~~A~~	~~B~~	~~1~~	2						SHT. 1 OF 1

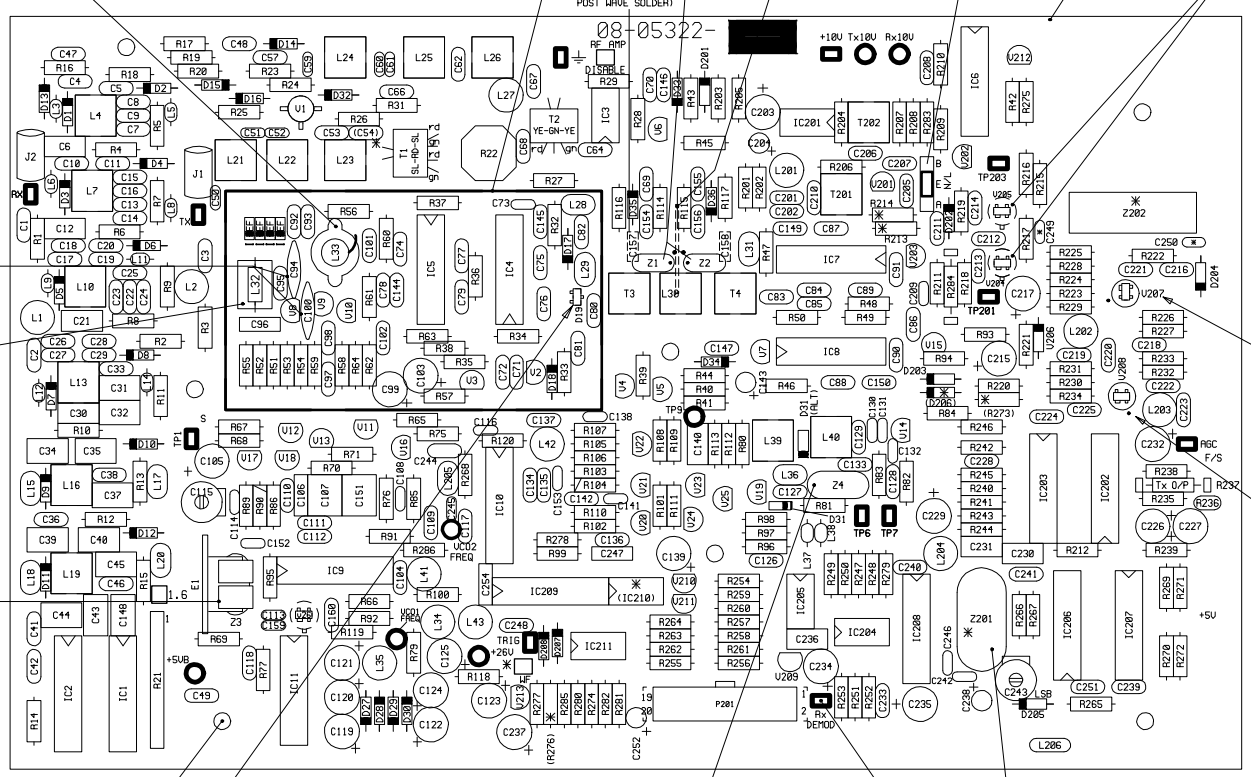

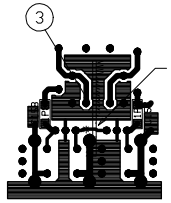

DETAIL "A"
(FIT AT POST WAVE SOLDER)

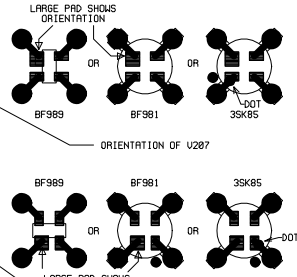

BF981 IS FITTED TO 4 HOLES.
NOTE ORIENTATION - REFER DETAIL.

LEADED VERSION OF 3SK85
IS FITTED TO 4 THRU HOLES,
MATCHING DOTS.

SMT VERSION OF 3SK85
IS SOLDERED OVER 4 THRU HOLE PADS,
MATCHING DOTS.

BF989 IS FITTED TO SMT PADS.
NOTE ORIENTATION - REFER DETAIL.

V207 & V208 FITTED AT PREPARATION IF
LEADED ALTERNATIVE IS NOT AVAILABLE.

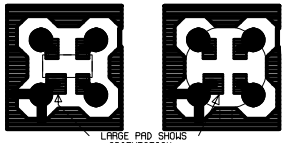

BSD213 IS FITTED TO 4 HOLES,
BEND EACH LEAD OUTWARDS 0.5mm TO FIT.
NOTE ORIENTATION - REFER DETAIL.

BSS83 IS FITTED TO SMT PADS.
NOTE ORIENTATION - REFER DETAIL.

V26, V204 & V205 FITTED AT PREPARATION IF
LEADED ALTERNATIVE IS NOT AVAILABLE.

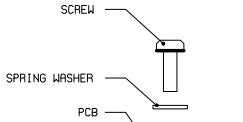

DETAIL "B"
REFER NOTE 6.
(TYP. 7 PLACES)

NOTES:-

1. ▭ THESE RESISTORS ARE 2% TOLERANCE.
2. ALL DIODES ARE BAW62 OR EQUIVALENT UNLESS OTHERWISE STATED.
3. * DENOTES - REFER TO TABLE.
4. FORM & SOLDER SHIELD IN PLACE - AFTER TEST (ITEM 2).
5. SECURE AFTER SOLDERING USING RTV SILICON.
6. PARTS ISSUED WITH METALWORK.
7. TO FIT CRYSTAL OVEN ASSEMBLY(E1):
   A. APPLY ONE LAYER OF KAPTON TAPE TO THE TOP OF CRYSTAL(Z3). DO NOT COVER SIDES.
   B. APPLY THERMA FLOW COMPOUND TO THE TEMPERATURE SENSOR(R3) AND TOP AND SIDES OF CRYSTAL, THEN SLIDE INTO OVEN ASSY(E1). ENSURE CRYSTAL IS NOT LOOSE IN THE METAL CLIP AND TOP OF CRYSTAL IS TOUCHING TEMPERATURE SENSOR.
   C. FIT THE OVEN & CRYSTAL ASSY ON TO PCB AND SOLDER.

ASSEMBLY	C249 & C250	ITEM 4	LINK WF	R213	R214	Z3	Z201	Z202	C54	D206	IC210	R273 & R276
08-05322-001	NOT FITTED	NOT FITTED	OPEN	1R	NOT FITTED	7304kHz 65-90078-000	1814kHz 65-90080-000	2.5kHz BW 65-91116-000	NOT FITTED	NOT FITTED	NOT FITTED	NOT FITTED
08-05322-002	27p	FITTED	CLOSED	1k8	4k3	7300kHz 65-90090	1813kHz 65-90089	3.0kHz BW 65-91120	NOT FITTED	NOT FITTED	NOT FITTED	NOT FITTED

PCB 07-01768-03

ISSUE CHANGE

ISSUE B
PCB WAS ISS A.
C/R 25023
NOTE 5 ADDED.
C/R 25022
13-06-97 BCL

ISSUE 1
C138 WAS 8p2.
C160 WAS 1n.
C/R 25027
24-06-97 NJA

ISSUE 2
C/R 25100
C121 POLARITY + WAS ON LH SIDE.
PCB WAS ISS 01
21-7-97 MJS

ISSUE 3
R52 WAS 10
C158 WAS 1p
R235 WAS 220
R237 WAS 390
C/R 25119
NOTE 6 ADDED.
DETAIL B ADDED.
C/R 25026
07-08-97 NGA

ISSUE 4
C127 WAS 33n.
C/R 25149
17-09-97 NGA

ISSUE 5
C/R 25167
E1 WAS 65-81000
REF TO E1 DEL'D FROM TABLE.
NOTE 7 ADDED.
30-10-97 NJA

ISSUE 6
R285 & V213 ADDED.
R235 WAS 180
R237 WAS 330
ITEM 7 WAS x12
C/R 25206
NJA 6-2-98

ISSUE 7:
ALTERNATIVE SMT DEVICES ADDED
D20-D23 WERE BB609A, D31 WAS BB405B, V26,V204 & V205 WERE BSD213.
PCB WAS ISS.-02
C/R 25961
GW 4-3-99

FILE NAME 07\01768___3

CODAN		SCALE 2:1	© CODAN PTY LTD, A.C.N. 007 590 605, 1996
MATERIAL	DRN. C G	DATE 2-10-96	RECEIVER/EXCITER ASSEMBLY
	CHKD. MJS	3-4-97	
FINISH	APPD. NJA	24-6-97	A1 DRAWING/DOC No. 08-05322
	TOLERANCES UNLESS OTHERWISE STATED: 2 PLACES DEC, 1 PLACE DEC, ANGULAR		ISS 4 5 6 7 — SHT 1 OF 2

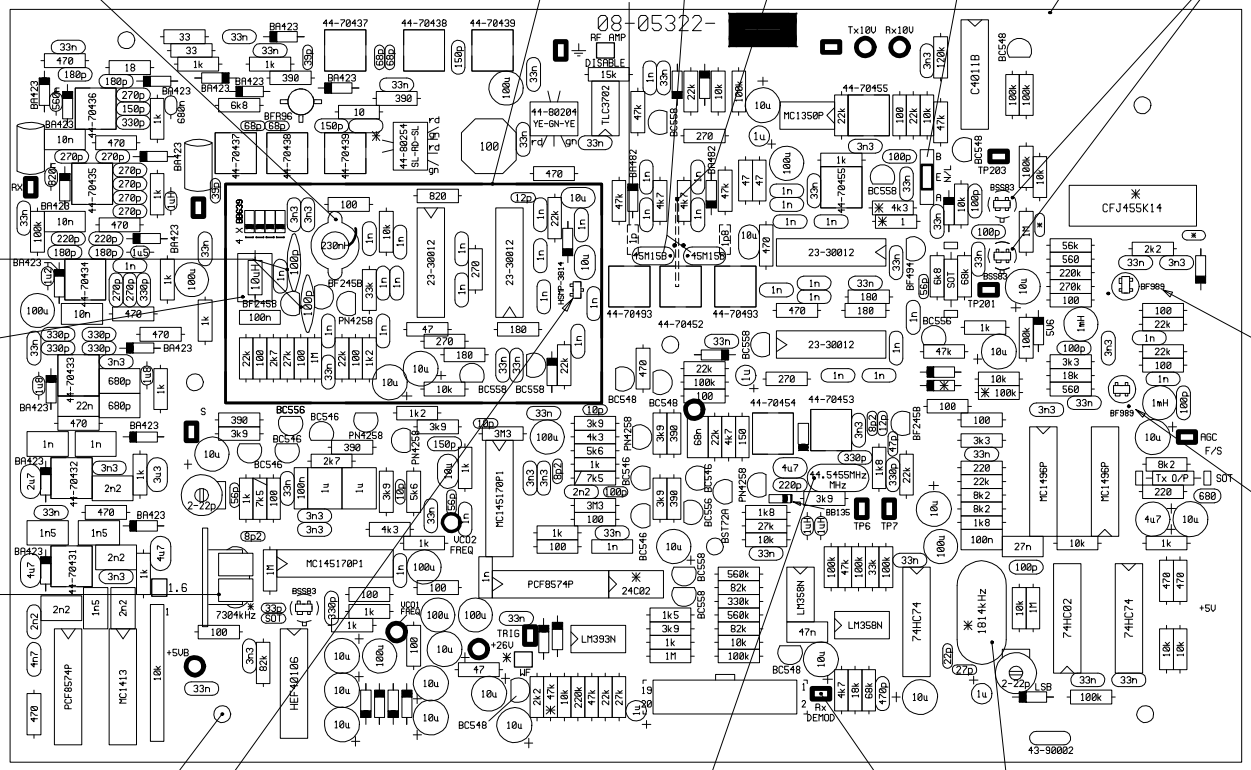

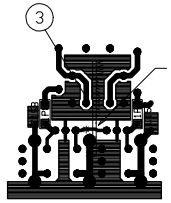

DETAIL "A"
(FIT AT POST WAVE SOLDER)

V204 & V205 ARE STATIC SENSITIVE

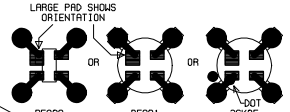

ORIENTATION OF V207

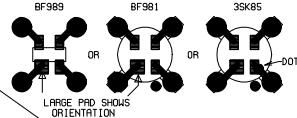

ORIENTATION OF V208

BF981 IS FITTED TO 4 HOLES.
NOTE ORIENTATION - REFER DETAIL.

LEADED VERSION OF 3SK85
IS FITTED TO 4 THRU HOLES,
MATCHING DOTS.

SMT VERSION OF 3SK85
IS SOLDERED OVER 4 THRU HOLE PADS,
MATCHING DOTS.

BF989 IS FITTED TO SMT PADS.
NOTE ORIENTATION - REFER DETAIL.

V207 & V208 FITTED AT PREPARATION IF
LEADED ALTERNATIVE IS NOT AVAILABLE.

BSD213 IS FITTED TO 4 HOLES,
BEND EACH LEAD OUTWARDS 0.5mm TO FIT.
NOTE ORIENTATION - REFER DETAIL.

BSS83 IS FITTED TO SMT PADS.
NOTE ORIENTATION - REFER DETAIL.

V26, V204 & V205 FITTED AT PREPARATION IF
LEADED ALTERNATIVE IS NOT AVAILABLE.

NOTES:-

1. ▭ THESE RESISTORS ARE 2% TOLERANCE.
2. ALL DIODES ARE BAW62 OR EQUIVALENT UNLESS OTHERWISE STATED.
3. * DENOTES - REFER TO TABLE.
4. FORM & SOLDER SHIELD IN PLACE - AFTER TEST (ITEM 2).
5. SECURE AFTER SOLDERING USING RTV SILICON.
6. PARTS ISSUED WITH METALWORK.
7. TO FIT CRYSTAL OVEN ASSEMBLY(E1):
   A. APPLY ONE LAYER OF KAPTON TAPE TO THE TOP OF CRYSTAL(Z3).
      DO NOT COVER SIDES.
   B. APPLY THERMA FLOW COMPOUND TO THE TEMPERATURE SENSOR(R3)
      AND TOP AND SIDES OF CRYSTAL, THEN SLIDE INTO OVEN ASSY(E1).
      ENSURE CRYSTAL IS NOT LOOSE IN THE METAL CLIP AND TOP
      OF CRYSTAL IS TOUCHING TEMPERATURE SENSOR.
   C. FIT THE OVEN & CRYSTAL ASSY ON TO PCB AND SOLDER.

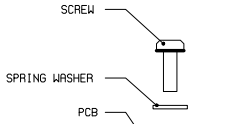

DETAIL "B"
REFER NOTE 6.
(TYP. 7 PLACES)

PCB 07-01768-03

ASSEMBLY	C249 & C250	ITEM 4	LINK WF	R213	R214	Z3	Z201	Z202	C54	D206	IC210	R273 & R276
08-05322-001	NOT FITTED	NOT FITTED	OPEN	1R	NOT FITTED	7304kHz GS-90078-000	1814kHz GS-90080-000	2.5kHz BW GS-91116-000	NOT FITTED	NOT FITTED	NOT FITTED	NOT FITTED
08-05322-002	27p	FITTED	CLOSED	1k8	4k3	7300kHz GS-90090	1813kHz GS-90089	3.0kHz BW GS-91120	NOT FITTED	NOT FITTED	NOT FITTED	NOT FITTED

ISSUE CHANGE

ISSUE B
PCB WAS ISS A.
C/R 25023
NOTE 5 ADDED.
C/R 25022
13-06-97 BCL

ISSUE 1
C138 WAS 8p2.
C160 WAS 1n.
C/R 25027
24-06-97 NJA

ISSUE 2
C/R 25100
C121 POLARITY + WAS ON LH SIDE.
PCB WAS ISS 01
21-7-97 MJS

ISSUE 3
R52 WAS 10
C158 WAS 1p
R235 WAS 220
R237 WAS 390
C/R 25119
NOTE 6 ADDED.
DETAIL B ADDED.
C/R 25026
07-08-97 NGA

ISSUE 4
C127 WAS 33n.
C/R 25149
17-09-97 NGA

ISSUE 5
C/R 25167
E1 WAS 65-81000
REF TO E1 DEL'D FROM TABLE.
NOTE 7 ADDED.
30-10-97 NJA

ISSUE 6
R285 & V213 ADDED.
R235 WAS 180
R237 WAS 330
ITEM 7 WAS x12
C/R 25206
NJA 6-2-98

ISSUE 7:
ALTERNATIVE SMT DEVICES ADDED
D20-D23 WERE BB609A, D31 WAS BB405B, V26,V204 & V205 WERE BSD213.
PCB WAS ISS.-02
C/R 25961
GW 4-3-99

FILE NAME
07\01768___3

CODAN

MATERIAL

FINISH

		SCALE 2:1
DRN.	C G	DATE 2-10-96
CHKD.	MJS	3-4-97
APPD.	NJA	24-6-97

TOLERANCES UNLESS OTHERWISE STATED
2 PLACES DEC
1 PLACE DEC
ANGULAR

© CODAN PTY LTD, A.C.N. 007 590 605, 1996

RECEIVER/EXCITER ASSEMBLY

A1 DRAWING/DOC No. 08-05322

ISS 4 5 6 7

SHT 2 OF 2

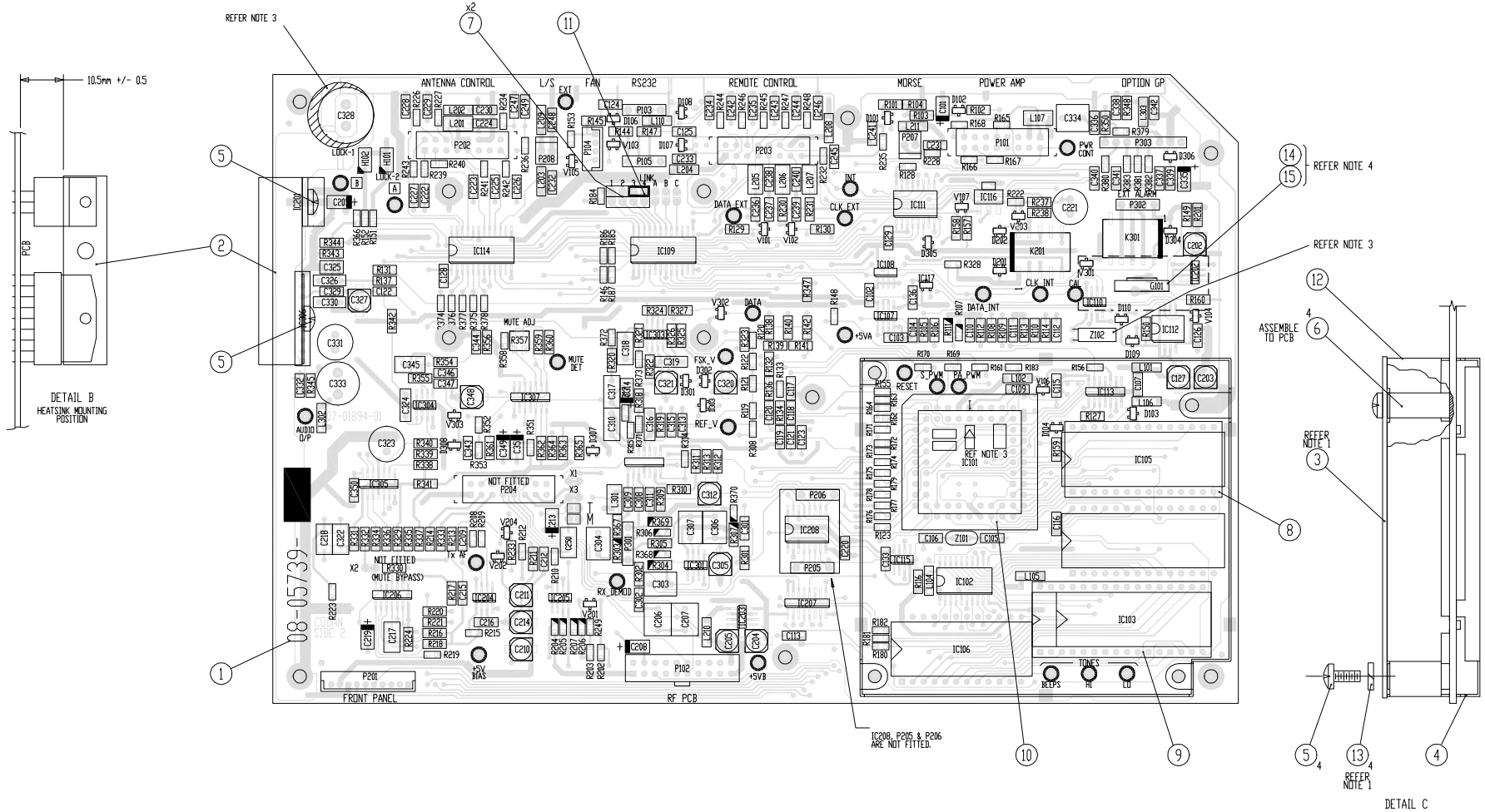

NOTES:

1. SOLDER BOTTOM SHIELD (ITEM 4) IN PLACE,FIT TOP SCREEN (ITEM 3) AND WASHER (ITEM 13) AFTER TEST.
2. C130, C131, C132 & C135 TO BE SURFACE MOUNTED TO SIDE 1 AT POST WAVE SOLDER REFER DETAIL A.
3. CAPACITOR C328 (TOP L/H CORNER) AND CRYSTAL Z102 (MID R/H SIDE) TO BE SECURED WITH RTV SILICON AFTER SOLDERING.
4. FIT A 15mm x 6mm RUBBER SLEEVE (ITEM 15) OVER BATTERY G101. PLACE A STRIP OF 12mm RUBBER FOAM TAPE (ITEM 14), OVER BATTERY LEGS ON SIDE 1 OF PCB.
5. SOLDER SHIELD (ITEM 12) SEAM AFTER WAVE SOLDER.

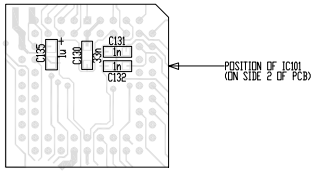

DETAIL A

PART VIEW OF SIDE 1 SHOWS POSITIONS OF C130, C131, C132 & C135

PCB :07-01894-01
ASSY:08-05739-001

ISSUE CHANGE

ISSUE 2:
NOTES 1 & 3 (UPDATE).
NOTE 5 ADDED.
NOTES ADDED TO ITEMS 3 & 13 & Z102.
C/R 26476
HKJ 1-3-00

FILE NAME 07\01894__1

CODAN	DRN. C G	SCALE 2:1	© CODAN PTY LTD, A.C.N. 007 590 605, 1999
MATERIAL	CHKD. NJA	DATE 10-5-99	MICROPROCESSOR & AUDIO ASSEMBLY
FINISH	APPD. SCS	6-7-99 / 12-1-00	DRAWING/DOC No. 08-05739
	TOLERANCES UNLESS OTHERWISE STATED: 2 PLACES DEC ± ; 1 PLACE DEC ± ; ANGULAR ±		A1
			ISS 2 — SHT 1 OF 2

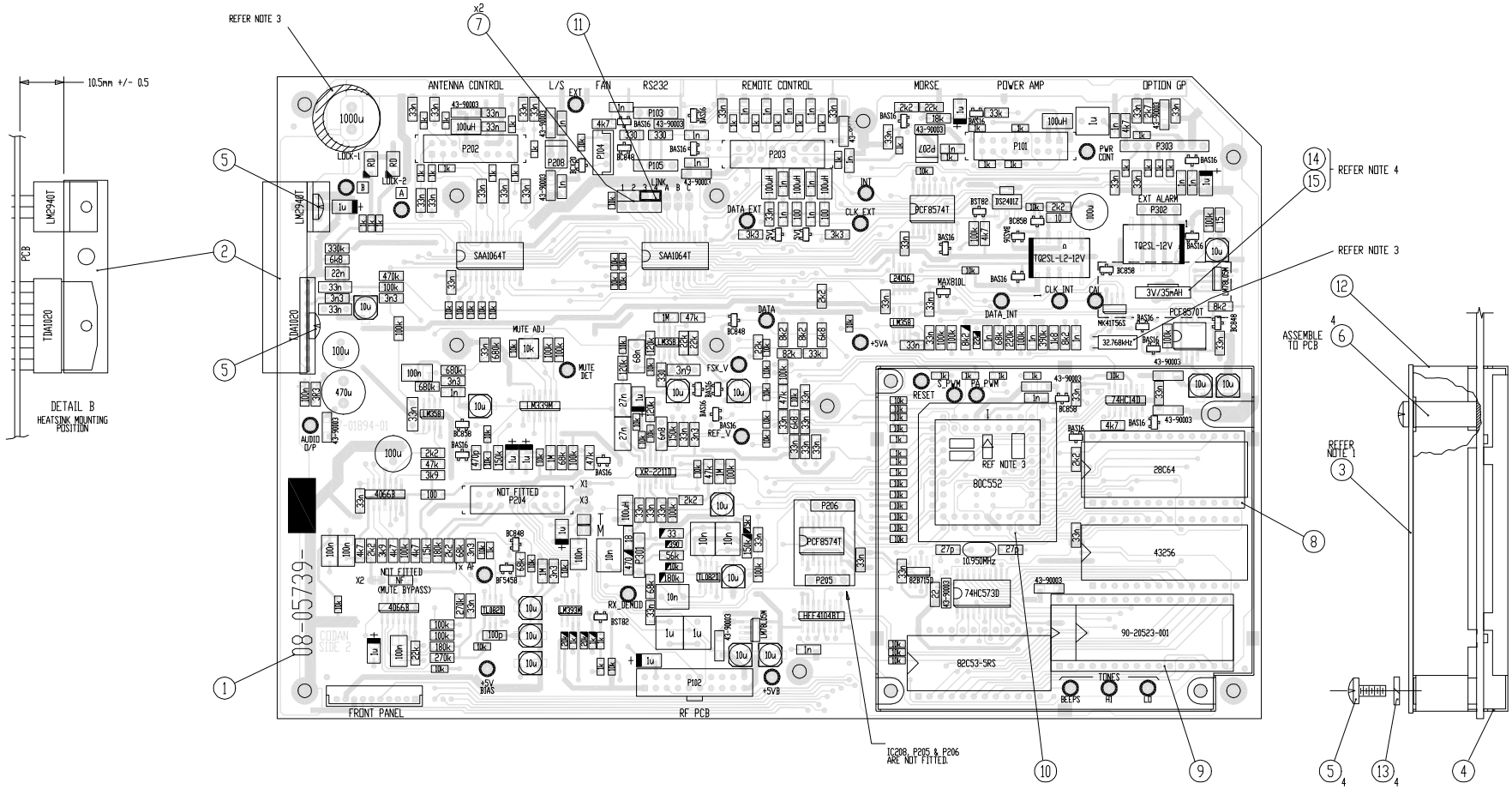

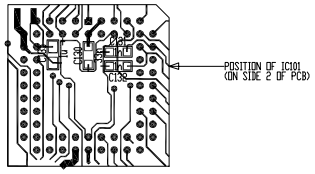

DETAIL A

PART VIEW OF SIDE 1 SHOWS POSITIONS OF C130, C131, C132 & C135

NOTES:

1. SOLDER BOTTOM SHIELD (ITEM 4) IN PLACE,FIT TOP SCREEN (ITEM 3) AND WASHER (ITEM 13) AFTER TEST.
2. C130, C131, C132 & C135 TO BE SURFACE MOUNTED TO SIDE 1 AT POST WAVE SOLDER REFER DETAIL A.
3. CAPACITOR C328 (TOP L/H CORNER) AND CRYSTAL Z102 (MID R/H SIDE) TO BE SECURED WITH RTV SILICON AFTER SOLDERING.
4. FIT A 15mm x 6mm RUBBER SLEEVE (ITEM 15) OVER BATTERY G10L PLACE A STRIP OF 12mm RUBBER FOAM TAPE (ITEM 14), OVER BATTERY LEGS ON SIDE 1 OF PCB.
5. SOLDER SHIELD (ITEM 12) SEAM AFTER WAVE SOLDER.

ISSUE CHANGE

ISSUE 2:
NOTES 1 & 3 UPDATED.
NOTE 5 ADDED.
NOTES ADDED TO ITEMS 3 & 13 & Z102.
C/R 26476
HKJ 1-3-00

PCB :07-01894-01
ASSY:08-05739-001

FILE NAME 07\01894_1

CODAN	SCALE 2:1	© CODAN PTY LTD. ACN. 007 590 605. 1999	
MATERIAL	DRN. C G DATE 10-5-99	MICROPROCESSOR & AUDIO ASSEMBLY	
	CHK'D. NJA 6-7-99		
	APP'D. SCS 12-1-00	DRAWING/DOC No.	
FINISH	TOLERANCES UNLESS OTHERWISE STATED 2 PLACES DEC ± 1 PLACE DEC ± ANGULAR ±	A1	08-05739
		ISS X 2	SHT 2 OF 2

DO NOT SCALE

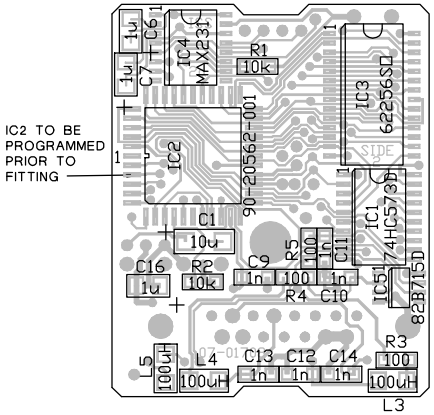

VIEW OF SIDE 2

SURFACE MOUNT COMPONENTS

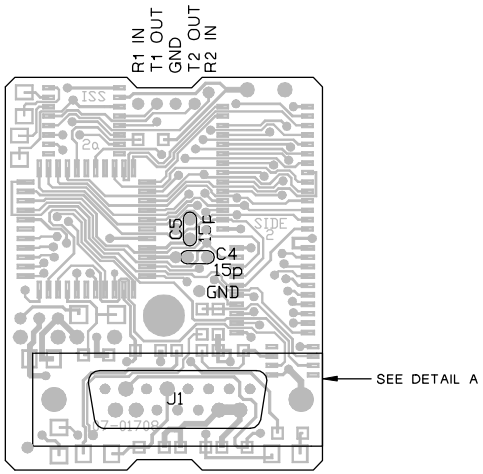

VIEW OF SIDE 2

THROUGH HOLE COMPONENTS

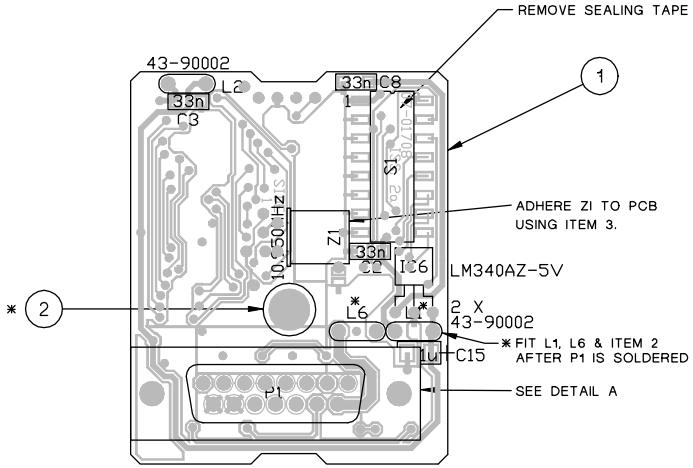

VIEW FROM SIDE 1

SURFACE MOUNT AND THROUGH HOLE COMPONENTS

DETAIL A

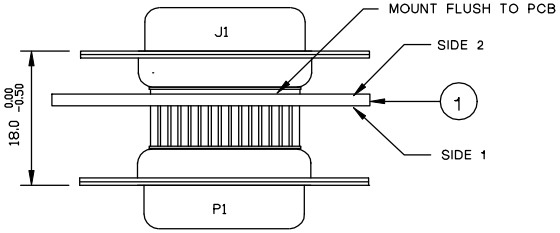

NOTES:
1. SOLDER J1 IN POSITION FIRST. FIT FLUSH TO PCB. KEEP SOLDER FILLETS TO A MINIMUM.
2. FIT P1 OVER J1 PINS AND SOLDER. ENSURE J1/P1 SIT SQUARE TO PCB.

PCB: 07-01708, ISSUE 2
ASSY: 08-05747-001

FILE No. 08\05747__1.DWG

DIMENSIONS IN mm

CODAN		SCALE 2:1	© CODAN PTY LTD, A.C.N. 007 590 605: 1999
MATERIAL	DRN C G	DATE 28-5-99	TITLE RS232/I²C INTERFACE PCB ASSEMBLY
	CHKD VS	28-5-99	
	APPD VS	31-05-99	DRAWING/DOC NO.
FINISH	TOLERANCES UNLESS OTHERWISE STATED: 2 PLACES DEC. ±0.25; 1 PLACE DEC. ±0.5; 0 PLACE DEC. ±1; ANGULAR ±2°		A2 08-05747
			ISS A — SHT. 1 OF 1

DO NOT SCALE

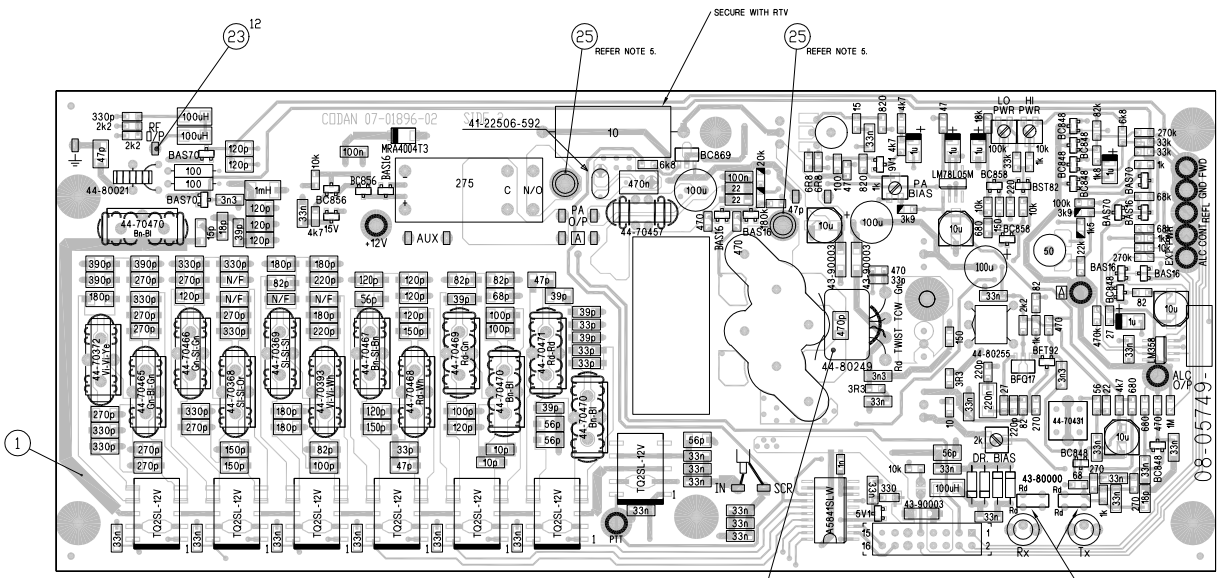

COMPONENT VALUES

SECURE WITH RTV
REFER NOTE 4

REFER NOTE 3

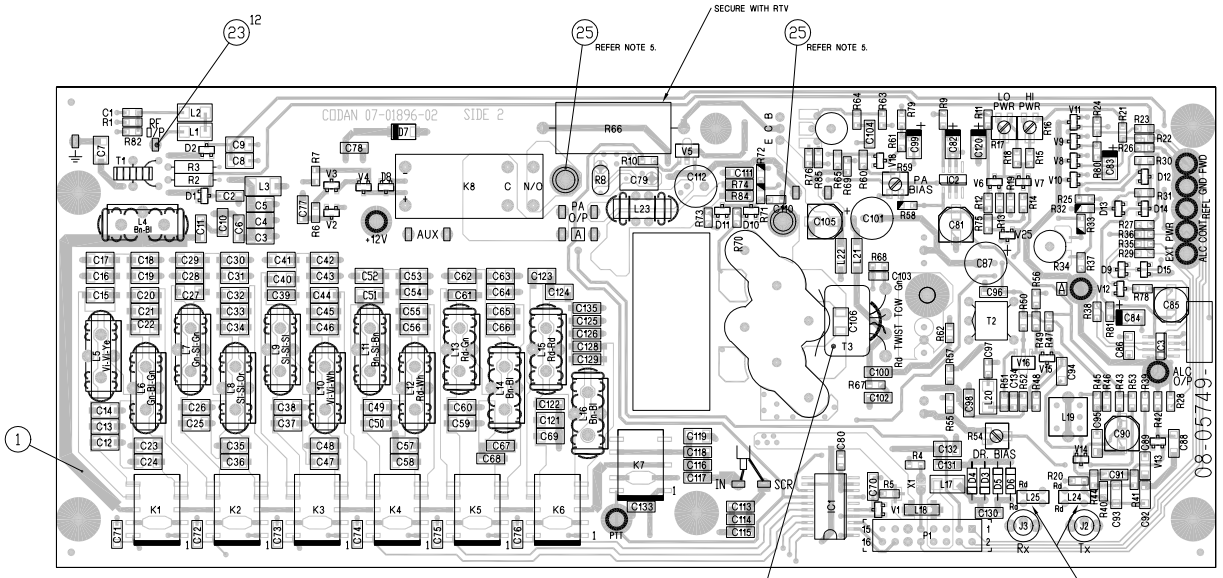

COMPONENT REFERENCE DESIGNATORS

SECURE WITH RTV
REFER NOTE 4

REFER NOTE 3

NOTES:
1. RESISTORS SHOWN ▭ ARE 1% TOLERANCE.
2. DIODES ARE 23-10001, OR EQUIVALENT, UNLESS OTHERWISE STATED.
3. ASSEMBLE L24 & L25 WITH RED WIRES AS SHOWN.
4. T3 IS FITTED OVER C106 AND SECURED WITH RTV.
5. USE AVDEL RIVET MACHINE TO FIT ITEM 25.

SHEET	ASSEMBLY	T4	C107	C108
1 & 4	08-05749-001	44-80256	180p	180p
2 & 4	08-05749-002	44-80256	180p	180p
3 & 4	08-05749-003	44-80265	330p	330p

PCB : 07-01896-02
ASSY : REFER TABLE

ISSUE B:
C125,C126 WERE 56p
C135 ADDED
D7 WAS 1N4004
R54 WAS 1k
V17,V21 & V22 WERE SHOWN ON SHT 1.
NOTE 2 DELETED SO NOTE 2 WAS 3, NOTE 3 WAS 4, NOTE 4 WAS 5.
NOTE 5 ADDED.
NOTE 4 CHANGED. NOTE ADDED TO R66 & T3.
C/R 26795
NJA 21-11-00

FILE No. 08\05749A_B.DWG

CODAN

MATERIAL

FINISH

DIMENSIONS IN mm

SCALE 2:1			
DRN	C G	DATE 19-8-99	
CHKD	NJA	31-8-00	
APPD			

TOLERANCES UNLESS OTHERWISE STATED
2 PLACES DEC. ±0.25
1 PLACE DEC. ±0.5
0 PLACE DEC. ±1
ANGULAR ±2°

© CODAN PTY LTD. A.C.N. 007 590 605: 1999

TITLE
PA AND FILTER
PCB ASSEMBLY (26.5MHz)

DRAWING/DOC NO.
A1 08-05749

ISS B

SHT. 1 OF 4

DO NOT SCALE

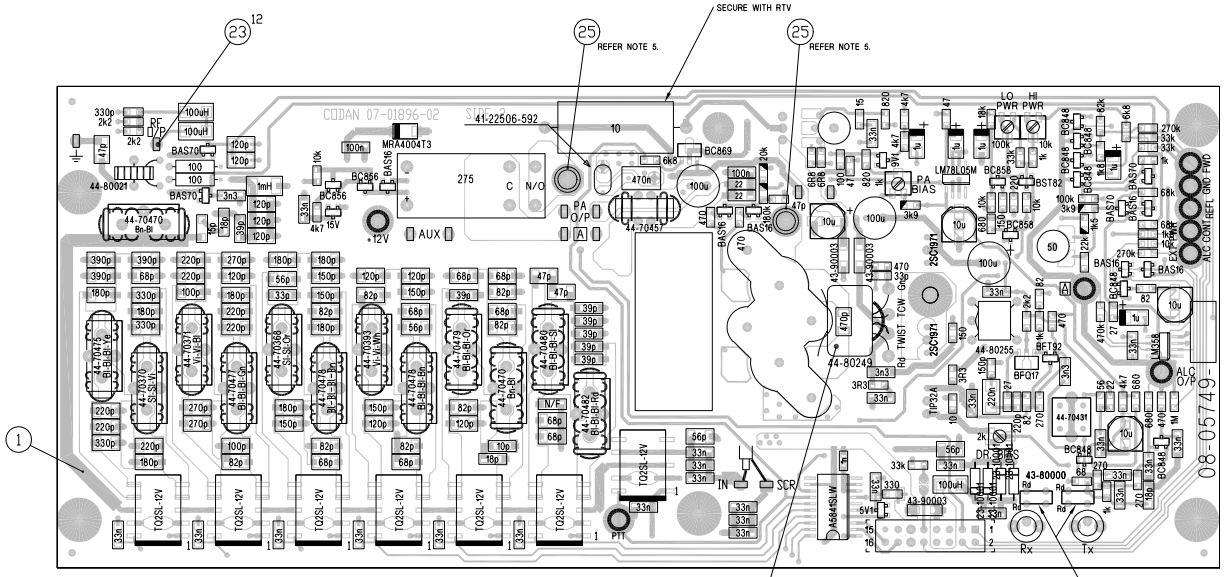

COMPONENT VALUES

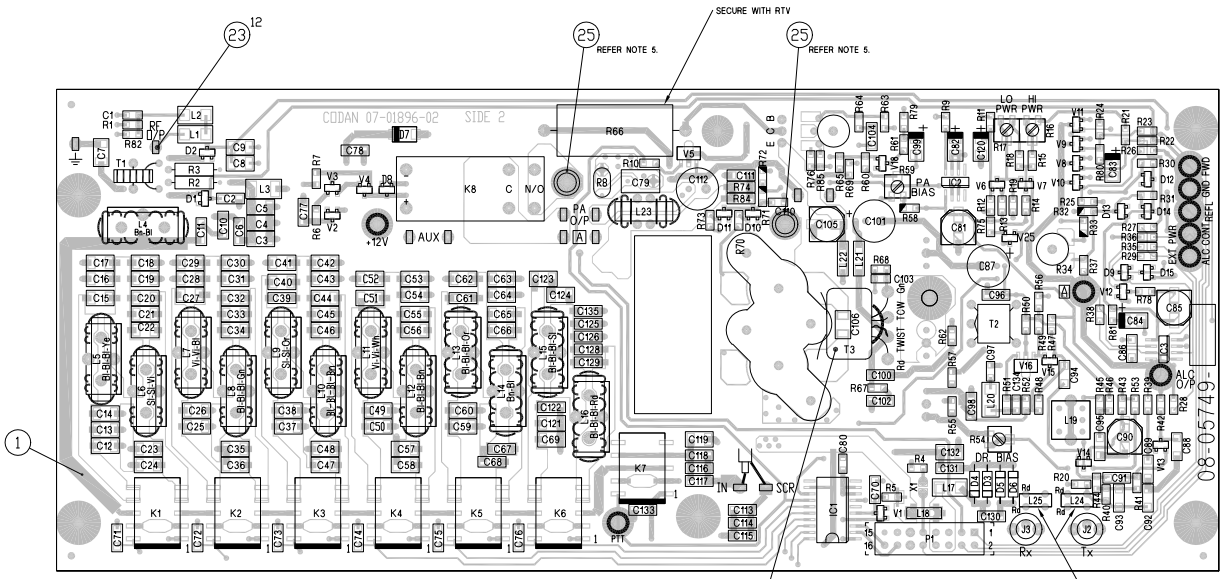

COMPONENT REFERENCE DESIGNATORS

ISSUE B:
C28,C29,C33 WERE 180p
C30,C34,C52 WERE 330p
C31,C32,C62 WERE 100p
C53,C126 WERE 56p
C63 WAS 120p
C125 WAS 68p
C54,C64 WERE N/F
C135 ADDED
D7 WAS 1N4004
R54 WAS 1k
V17,V21 & V22 WERE SHOWN ON SHT 1.
NOTE 2 DELETED SO NOTE 2 WAS 3, NOTE 3 WAS 4, NOTE 4 WAS 5. NOTE 5 ADDED. NOTE 4 CHANGED. NOTE ADDED TO R66 & T3.
C/R 26795
NJA 21-11-00

NOTES:
1. RESISTORS SHOWN ▭ ARE 1% TOLERANCE.
2. DIODES ARE 23-10001, OR EQUIVALENT, UNLESS OTHERWISE STATED.
3. ASSEMBLE L24 & L25 WITH RED WIRES AS SHOWN.
4. T3 IS FITTED OVER C106 AND SECURED WITH RTV.
5. USE AVDEL RIVET MACHINE TO FIT ITEM 25.

SHEET	ASSEMBLY	T4	C107	C108
1 & 4	08-05749-001	44-80256	180p	180p
2 & 4	08-05749-002	44-80256	180p	180p
3 & 4	08-05749-003	44-80265	330p	330p

PCB : 07-01896-02
ASSY : REFER TABLE

FILE No. 08\05749B_B.DWG

CODAN

MATERIAL

FINISH

DIMENSIONS IN mm

SCALE 2:1		
DRN	C G	DATE 19-8-99
CHKD	NJA	31-8-00
APPD		

TOLERANCES UNLESS OTHERWISE STATED
2 PLACES DEC. ±0.25
1 PLACE DEC. ±0.5
0 PLACE DEC. ±1
ANGULAR ±2°

© CODAN PTY LTD, A.C.N. 007 590 605: 1999

TITLE
PA AND FILTER
PCB ASSEMBLY (30MHz)

DRAWING/DOC NO.
A1 08-05749

ISS B

SHT. 2 OF 4

DO NOT SCALE

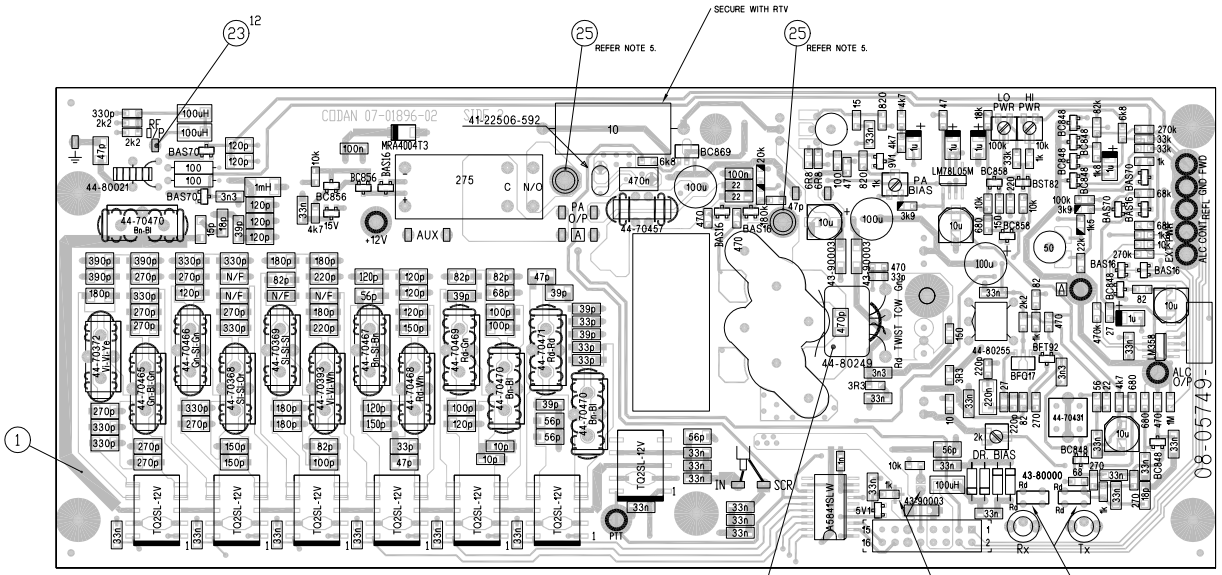

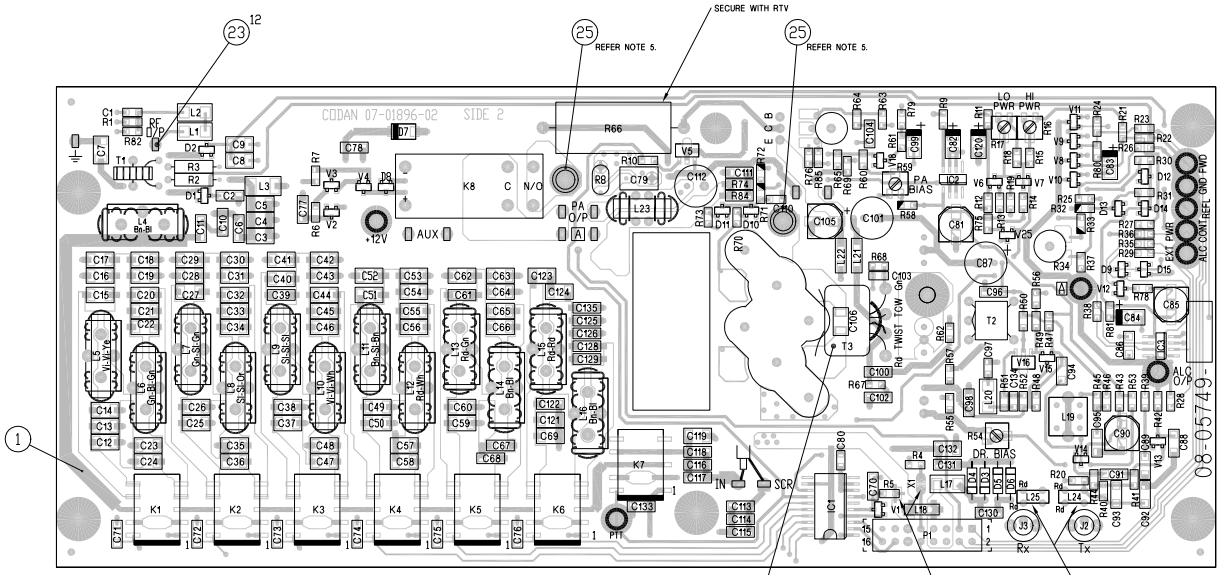

ISSUE B:
C125,C126 WERE 56p
C135 ADDED.
D7 WAS 1N4004
R54 WAS 1k
V17,V21 & V22 WERE
SHOWN ON SHT 1.
NOTE 2 DELETED SO
NOTE 2 WAS 3,
NOTE 3 WAS 4,
NOTE 4 WAS 5.
NOTE 5 ADDED.
NOTE 4 CHANGED.
NOTE ADDED TO R66
& T3.
C/R 26795
NJA 21-11-00

NOTES:
1. RESISTORS SHOWN ▭ ARE 1% TOLERANCE.
2. DIODES ARE 23-10001, OR EQUIVALENT, UNLESS OTHERWISE STATED.
3. ASSEMBLE L24 & L25 WITH RED WIRES AS SHOWN.
4. T3 IS FITTED OVER C106 AND SECURED WITH RTV.
5. USE AVDEL RIVET MACHINE TO FIT ITEM 25.
6. FOR VERSION -003: R5 - FIT 1k RESISTOR & DO NOT JOIN LINK (X1).

SHEET	ASSEMBLY	T4	C107	C108
1 & 4	08-05749-001	44-80256	180p	180p
2 & 4	08-05749-002	44-80256	180p	180p
3 & 4	08-05749-003	44-80265	330p	330p

PCB : 07-01896-02
ASSY : REFER TABLE

FILE No.
08\05749C_B.DWG

CODAN

MATERIAL

FINISH

DIMENSIONS IN mm

DRN	C G	SCALE 2:1
CHKD	NJA	DATE 19-8-99
APPD		31-8-00

TOLERANCES UNLESS OTHERWISE STATED
2 PLACES DEC. ±0.25
1 PLACE DEC. ±0.5
0 PLACE DEC. ±1
ANGULAR ±2°

© CODAN PTY LTD, A.C.N. 007 590 605: 1999

TITLE
PA AND FILTER
(50W, 26.5MHz)

DRAWING/DOC NO.
A1 08-05749

ISS B

SHT. 3 OF 4

DO NOT SCALE

ISSUE B.
V17, V21 & V22 WERE SHOWN ON SHT 1
C/R 26795
NJA 21-11-00

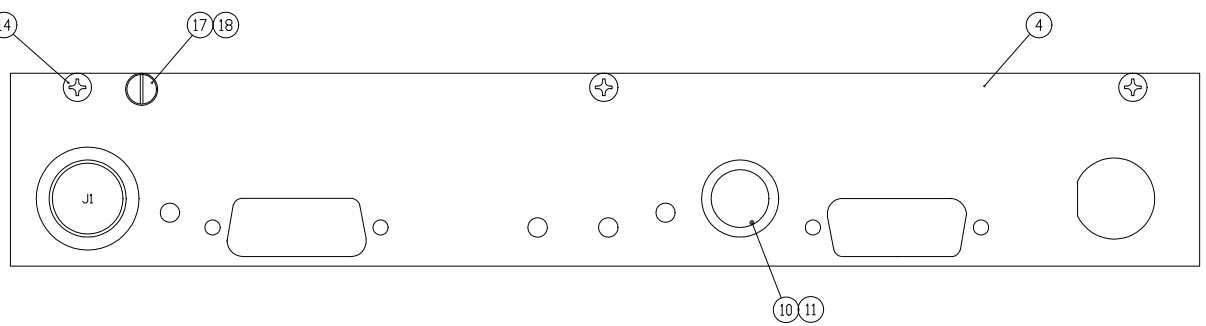

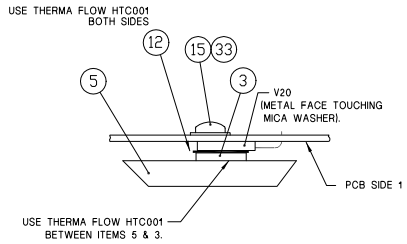

DETAIL A

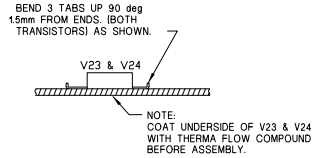

DETAIL B

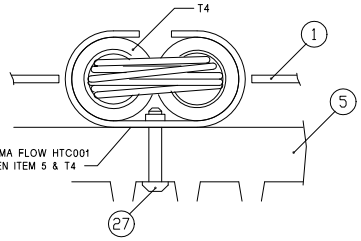

DETAIL D

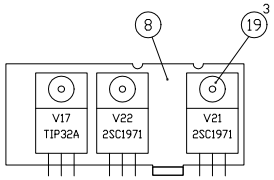

DETAIL E

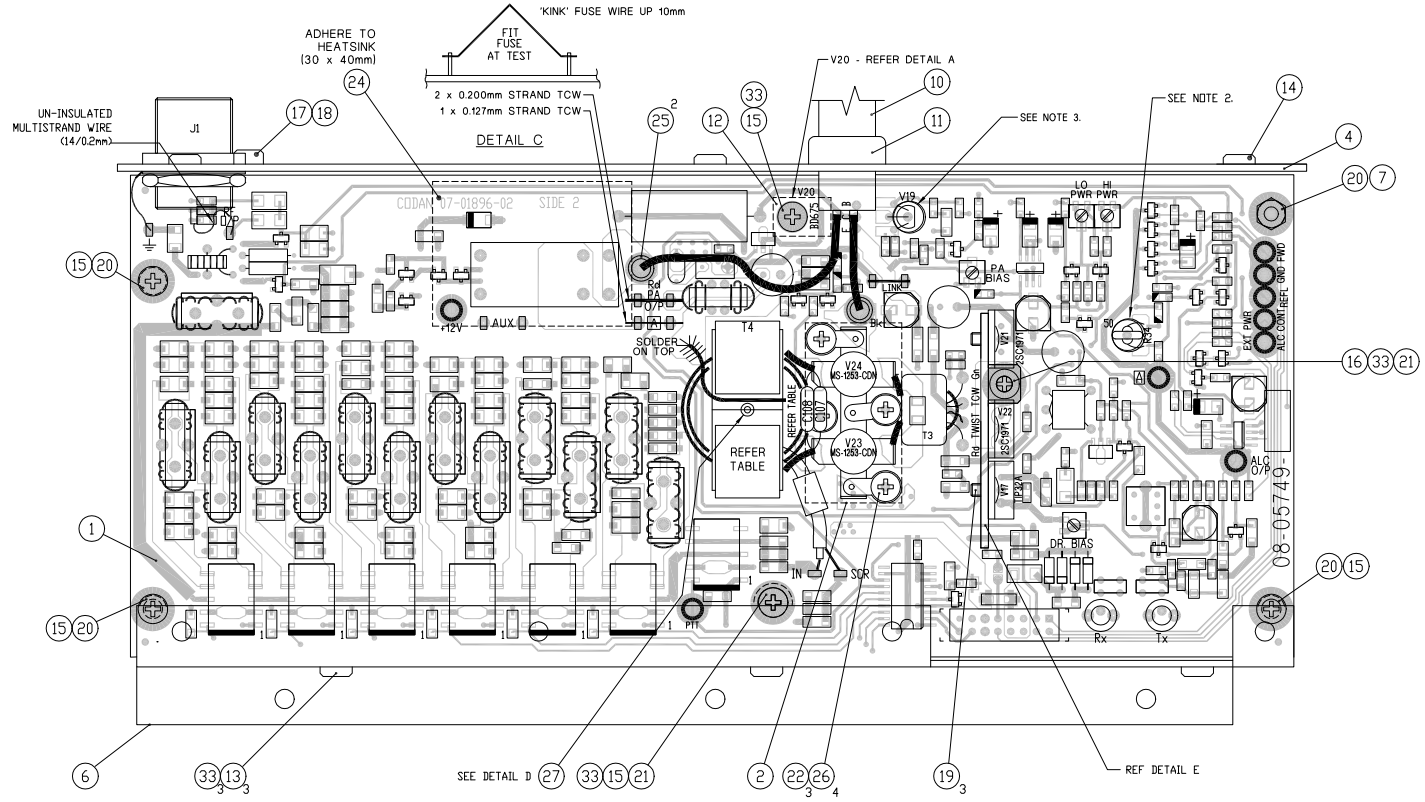

SHEET	ASSEMBLY	T4	C107	C108
1 & 4	08-05749-001	44-80256	180p	180p
2 & 4	08-05749-002	44-80256	180p	180p
3 & 4	08-05749-003	44-80265	330p	330p

NOTES:
1. ALL LINKS ARE 22SWG.
2. FIT HEATSHRINK SLEEVE(ITEM 28) X 8mm OVER R34, ENSURING THAT TOP IS COVERED. COAT WITH THERMA-FLOW COMPOUND, INSERT INTO HEATSINK(ITEM 5) AND SOLDER.
3. COAT V19 WITH THERMA-FLOW COMPOUND, INSERT INTO HEATSINK AND SOLDER.
4. ITEM 7, ITEM 13(6 OFF), ITEM 14(2 OFF), ITEM 15(3 OFF), ITEM 29, ITEM 32 & ITEM 33(11 OFF) ARE OFFSET DELIVERY AND FITTED AT FINAL ASSEMBLY (REFER 08-04961-XXX).

PCB : 07-01896-02
ASSY: 08-05749-001

FILE No.
08\05749A_B.DWG

CODAN

MATERIAL

FINISH

DIMENSIONS IN mm

DRN	C G	SCALE 2:1
CHKD	NJA	DATE 19-8-99
APPD		31-8-00

TOLERANCES UNLESS OTHERWISE STATED
2 PLACES DEC. ±0.25
1 PLACE DEC. ±0.5
0 PLACE DEC. ±1
ANGULAR ±2°

© CODAN PTY LTD, A.C.N. 007 590 605: 1997

TITLE
PA AND FILTER
FINAL ASSEMBLY

A1

DRAWING/DOC NO.
08-05749

ISS B

SHT. 4 OF 4

ISSUE B:
NOTE ADDED TO T1 & T2
NOTE RE RTV DELETED
FROM Z1,Z2,Z4 & Z201
C/R 26801
NJA 21-11-00

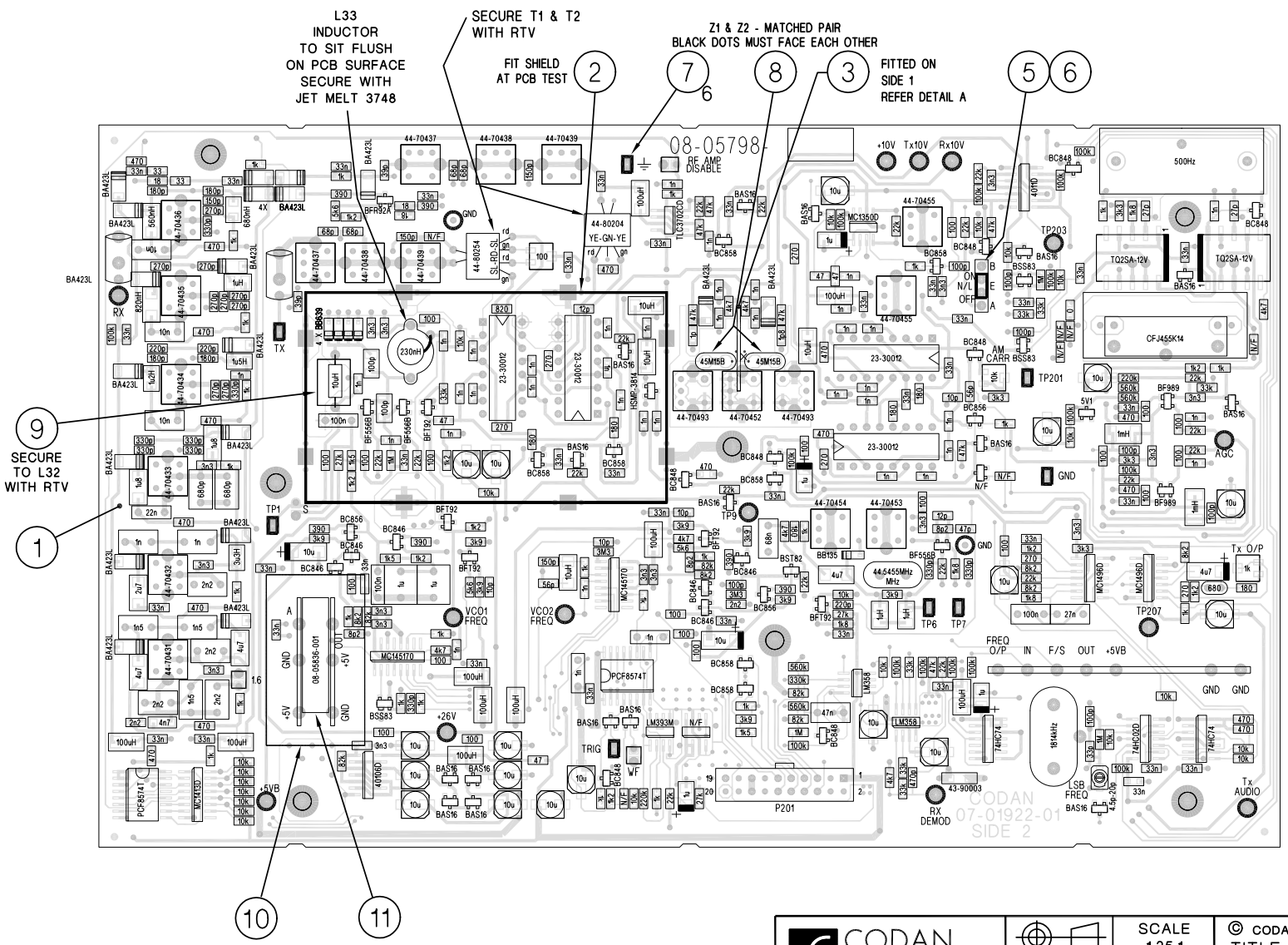

FILE No.
08\05798__B.DWG

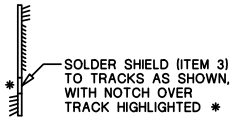

DETAIL "A"

PCB : 07-01922-01
ASSY : 08-05798-001

CODAN

MATERIAL

FINISH

DRN	C G	SCALE 1.25:1
CHKD	NJA	DATE 12-5-00
APPD		24-8-00

TOLERANCES
UNLESS OTHERWISE STATED
2 PLACES DEC. ±0.10
1 PLACE DEC. ±0.5
0 PLACE DEC. ±1

© CODAN PTY LTD, A.C.N. 007 590 605: 2000

TITLE
RECEIVER/EXCITER
COMPONENT VALUES

A3

DRAWING/DOC NO.
08-05798

ISS B

SHT. 1 OF 2

ISSUE B:
NOTE ADDED TO T1 & T2
NOTE RE RTV DELETED
FROM Z1,Z2,Z4 & Z201
C/R 26801
NJA 21-11-00

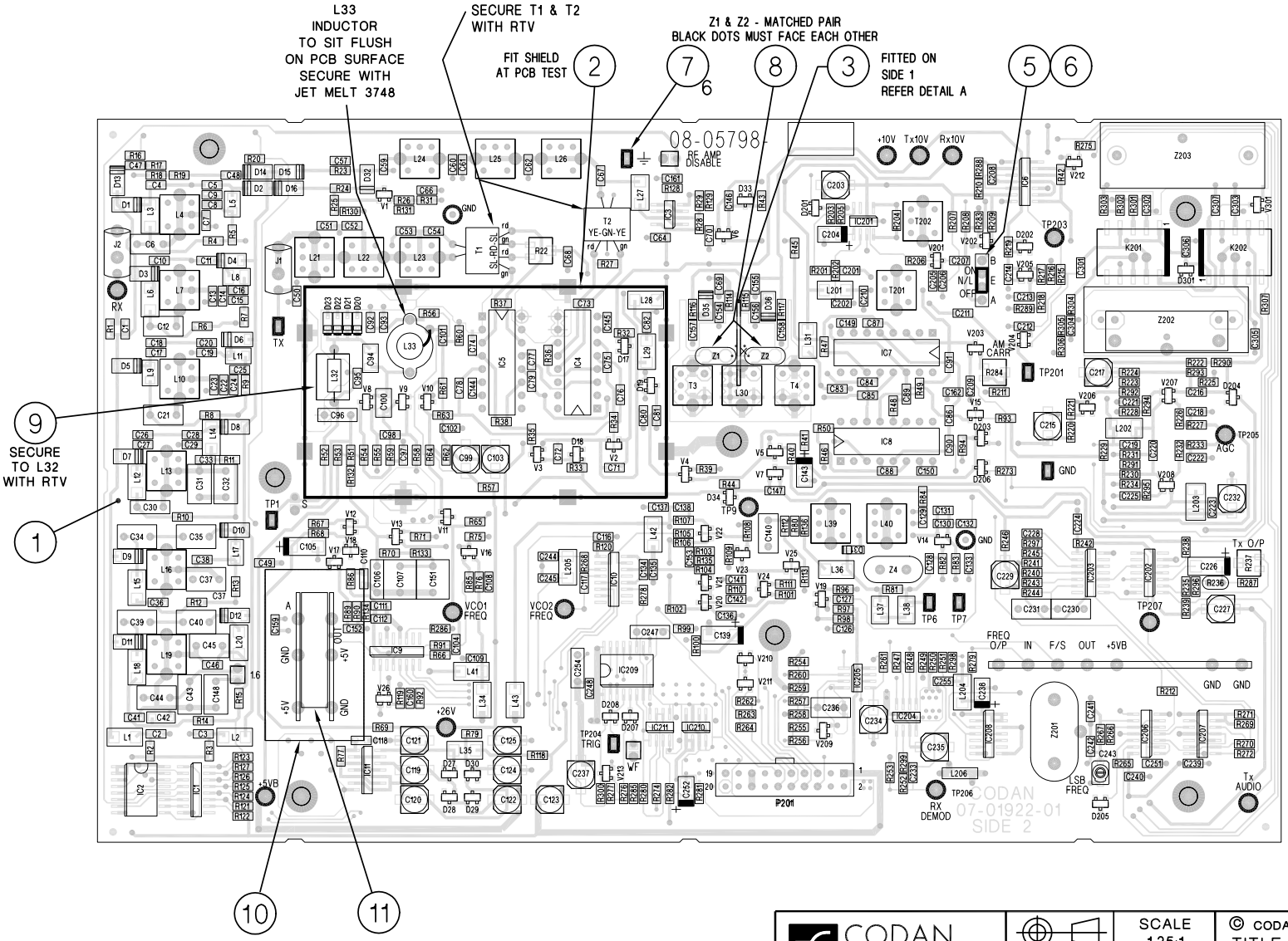

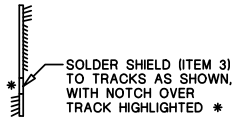

DETAIL "A"

PCB : 07-01922-01
ASSY : 08-05798-001

FILE No.
08\05798__B.DWG

CODAN

MATERIAL

FINISH

		SCALE 1.25:1
DRN	C G	DATE 12-5-00
CHKD	NJA	24-8-00
APPD		

TOLERANCES
UNLESS OTHERWISE STATED
2 PLACES DEC. ±0.10
1 PLACE DEC. ±0.5
0 PLACE DEC. ±1

© CODAN PTY LTD, A.C.N. 007 590 605: 2000

TITLE
RECEIVER/EXCITER
REFERENCES

A3

DRAWING/DOC NO.
08-05798

ISS B

SHT. 2 OF 2

DO NOT SCALE

ISSUE 2:
C3-C5,C8 & C9 WERE 120p
C/R 26841
NJA 19-2-01

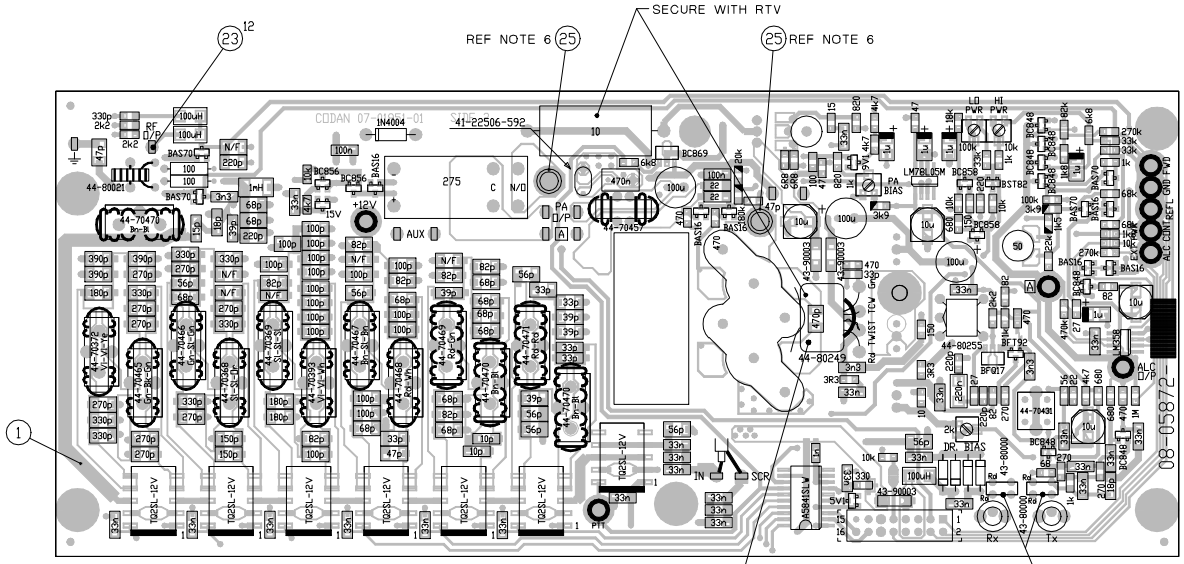

COMPONENT VALUES

REFER NOTE 5

REFER NOTE 4

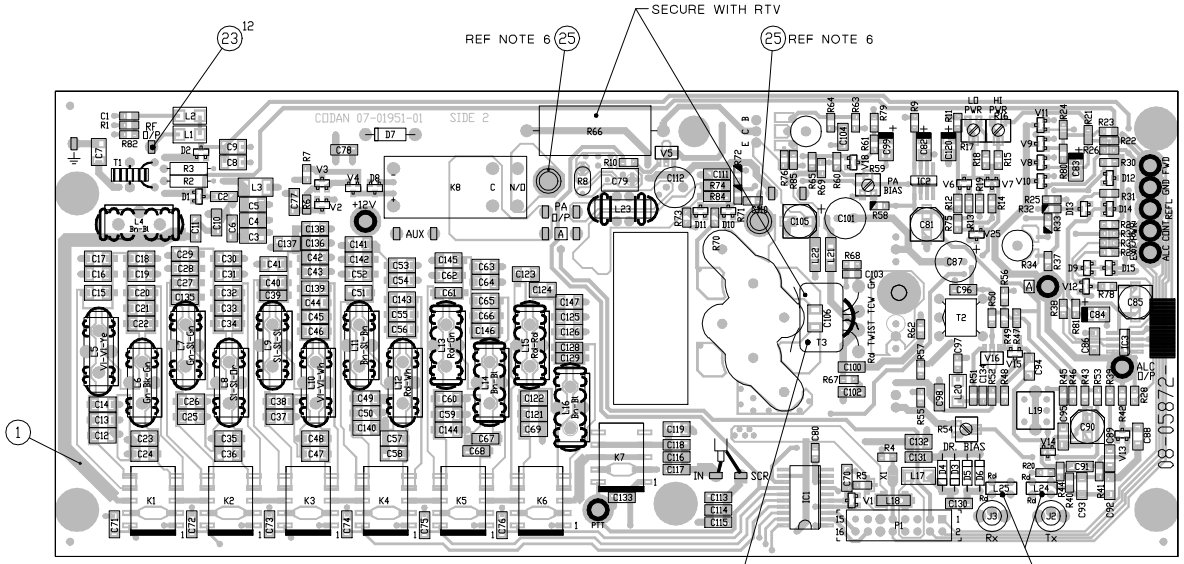

COMPONENT REFERENCE DESIGNATORS

REFER NOTE 5

REFER NOTE 4

NOTES:

1. RESISTORS SHOWN ▭ ARE 1%
2. SECURE ALL TOROIDAL INDUCTORS TO PCB, USING JET MELT.
3. DIODES ARE 23-10001, OR EQUIVALENT, UNLESS OTHERWISE STATED.
4. ASSEMBLE L24 & L25 WITH RED WIRES AS SHOWN.
5. T3 IS FITTED OVER C106.
6. FIT ITEM (25) USING AVDEL RIVET MACHINE.

SHEET	ASSEMBLY
1 & 2	08-05872-001
3 & 4	08-05872-002

PCB : 07-01951-01

DIMENSIONS IN mm

FILE No.
08\05872A_2.DWG

CODAN

MATERIAL

FINISH

DRN	ILT	DATE 31-10-00	SCALE 2:1
CHKD	NJA	6-11-00	
APPD	SCS	8-11-00	

TOLERANCES UNLESS OTHERWISE STATED
2 PLACES DEC. ±0.26
1 PLACE DEC. ±0.5
0 PLACE DEC. ±1
ANGULAR ±2°

© CODAN PTY LTD, A.C.N. 007 590 605: 1999

TITLE
PA AND FILTER (INTERIM)
PCB ASSEMBLY (26.5MHz)

DRAWING/DOC NO.
A1 08-05872

ISS 1 2

SHT. 1 OF 4

DO NOT SCALE

ISSUE 2:
REFER SHT 1
C/R 26841

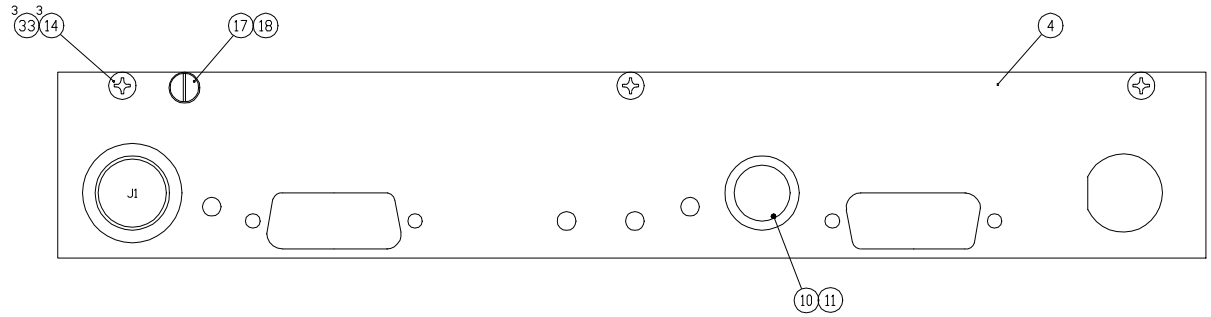

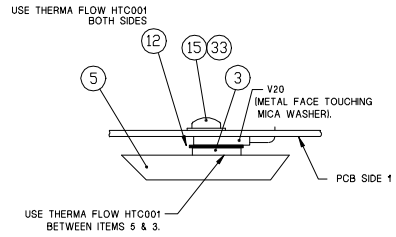

DETAIL A

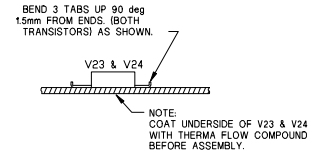

DETAIL B

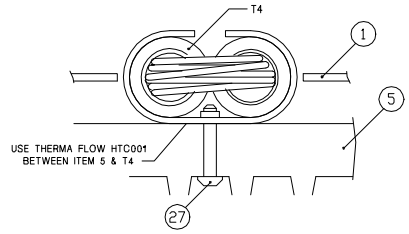

DETAIL D

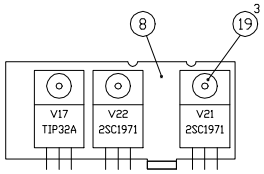

DETAIL E

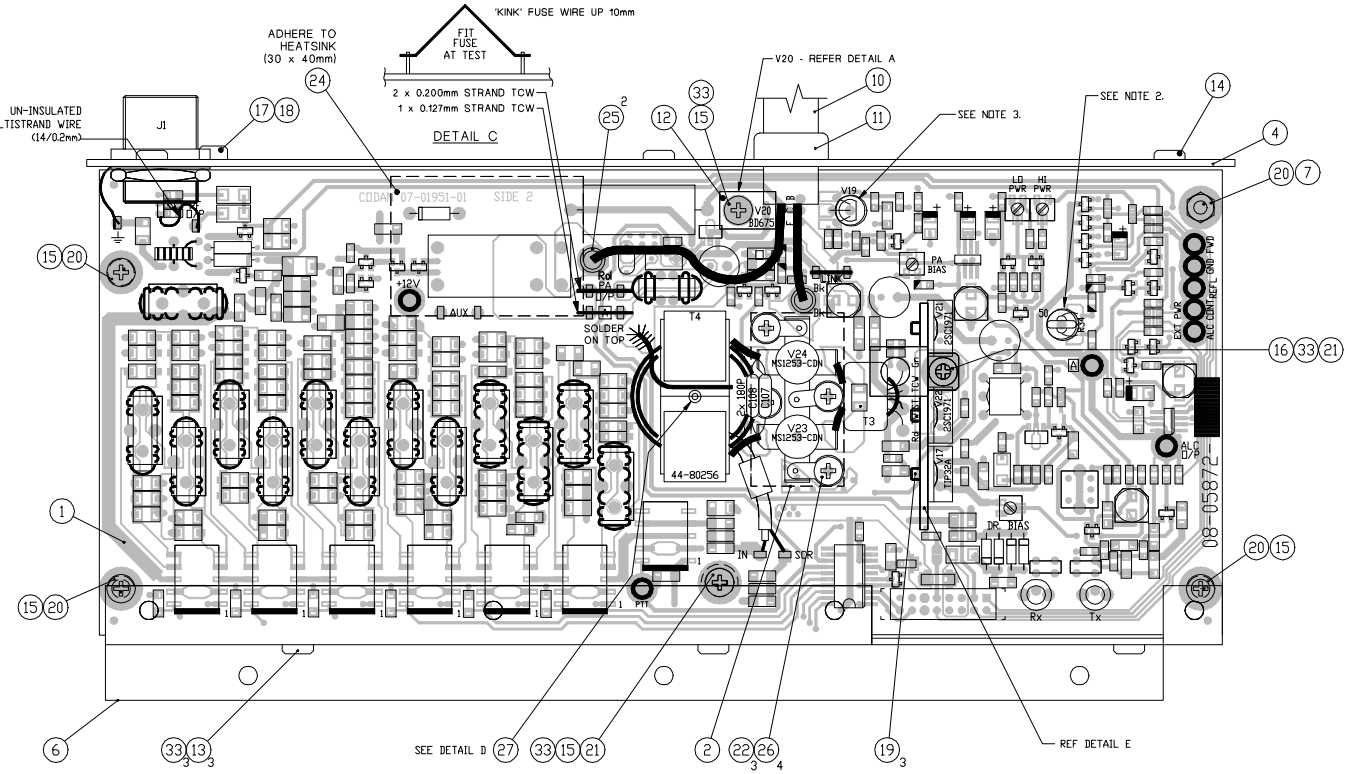

SHEET	ASSEMBLY
1 & 2	08-05872-001
3 & 4	08-05872-002

NOTES:
1. ALL LINKS ARE 22SWG.
2. FIT HEATSHRINK SLEEVE(ITEM 28) X 8mm OVER R34, ENSURING THAT TOP IS COVERED. COAT WITH THERMA-FLOW COMPOUND, INSERT INTO HEATSINK(ITEM 5) AND SOLDER.
3. COAT V19 WITH THERMA-FLOW COMPOUND, INSERT INTO HEATSINK AND SOLDER.
4. ITEM 7, ITEM 13(6 OFF), ITEM 14(2 OFF), ITEM 15(3 OFF), ITEM 29, ITEM 32 & ITEM 33(11 OFF) ARE OFFSET DELIVERY AND FITTED AT FINAL ASSEMBLY (REFER 08-04961-XXX).

PCB : 07-01951-01

DIMENSIONS IN mm

FILE No.
08\05872A_2.DWG

CODAN

MATERIAL

FINISH

DRN	ILT	31-10-00	SCALE 2:1
CHKD	NJA	6-11-00	
APPD	SCS	8-11-00	

TOLERANCES UNLESS OTHERWISE STATED
2 PLACES DEC. ±0.26
1 PLACE DEC. ±0.5
0 PLACE DEC. ±1
ANGULAR ±2°

© CODAN PTY LTD, A.C.N. 007 590 605: 1997

TITLE
PA AND FILTER (INTERIM)
FINAL ASSEMBLY (26.5MHz)

DRAWING/DOC NO.
A1 08-05872

ISS 1 2

SHT. 2 OF 4

DO NOT SCALE

ISSUE 2:
C3-C5,C8 & C9 WERE 120p
C25 WAS 270p
C31 & C32 WERE 100p
C144 WAS N/F
C/R 26841
NJA 19-2-01

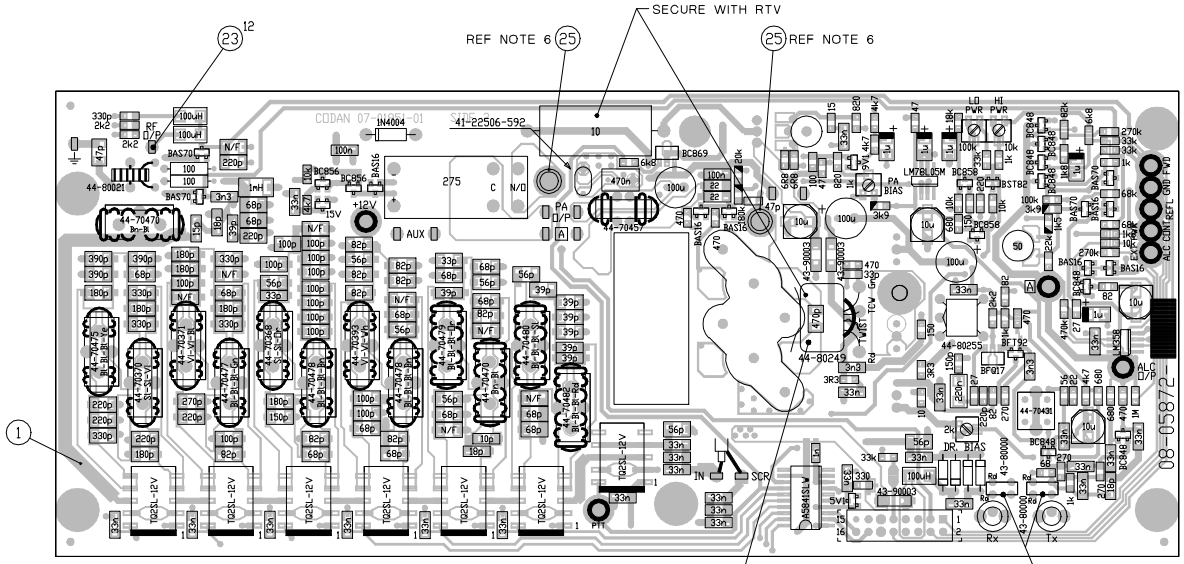

COMPONENT VALUES

REFER NOTE 5

REFER NOTE 4

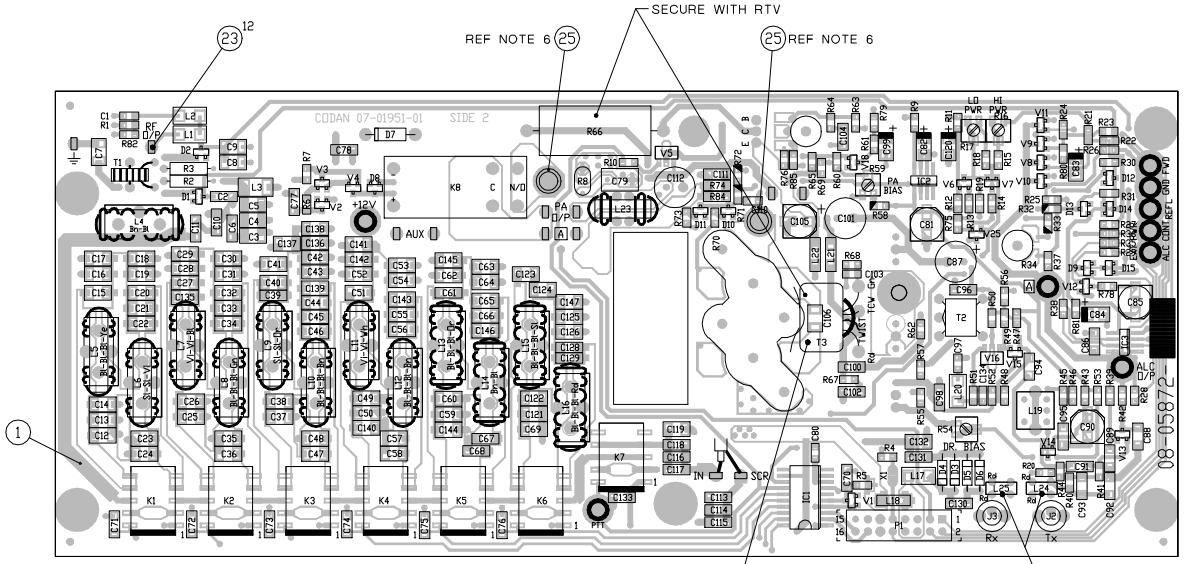

COMPONENT REFERENCE DESIGNATORS

REFER NOTE 5

REFER NOTE 4

NOTES:

1. RESISTORS SHOWN ▭ ARE 1%
2. SECURE ALL TOROIDAL INDUCTORS TO PCB, USING JET MELT.
3. DIODES ARE 23-10001, OR EQUIVALENT, UNLESS OTHERWISE STATED.
4. ASSEMBLE L24 & L25 WITH RED WIRES AS SHOWN.
5. T3 IS FITTED OVER C106.
6. FIT ITEM (25) USING AVDEL RIVET MACHINE.

SHEET	ASSEMBLY
1 & 2	08-05872-001
3 & 4	08-05872-002

PCB : 07-01951-01

FILE No.
08\05872B_2.DWG

DIMENSIONS IN mm

CODAN		SCALE 2:1	© CODAN PTY LTD, A.C.N. 007 590 605: 1999
MATERIAL	DRN	ILT	DATE 31-10-00	TITLE PA AND FILTER (INTERIM) PCB ASSEMBLY (30.0MHz)
	CHKD	NJA	6-11-00	
	APPD	SCS	8-11-00	DRAWING/DOC NO.
FINISH	TOLERANCES UNLESS OTHERWISE STATED: 2 PLACES DEC. ±0.26; 1 PLACE DEC. ±0.5; 0 PLACE DEC. ±1; ANGULAR ±2°			A1 08-05872
				ISS 1 2 — SHT. 3 OF 4

DO NOT SCALE

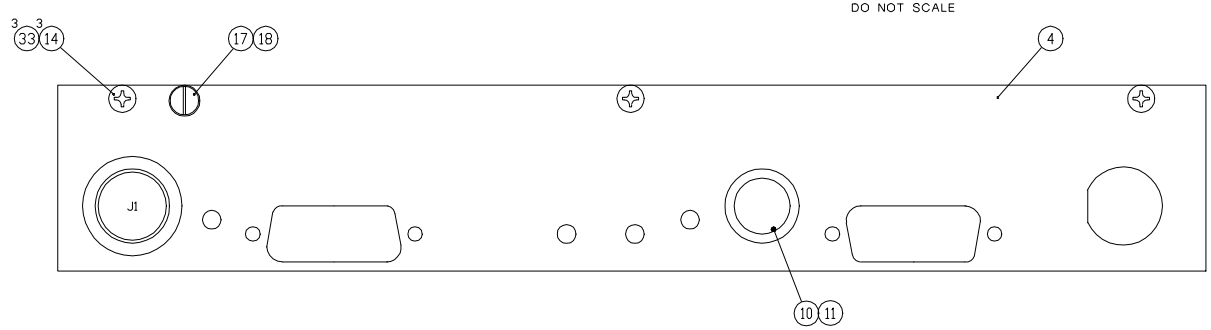

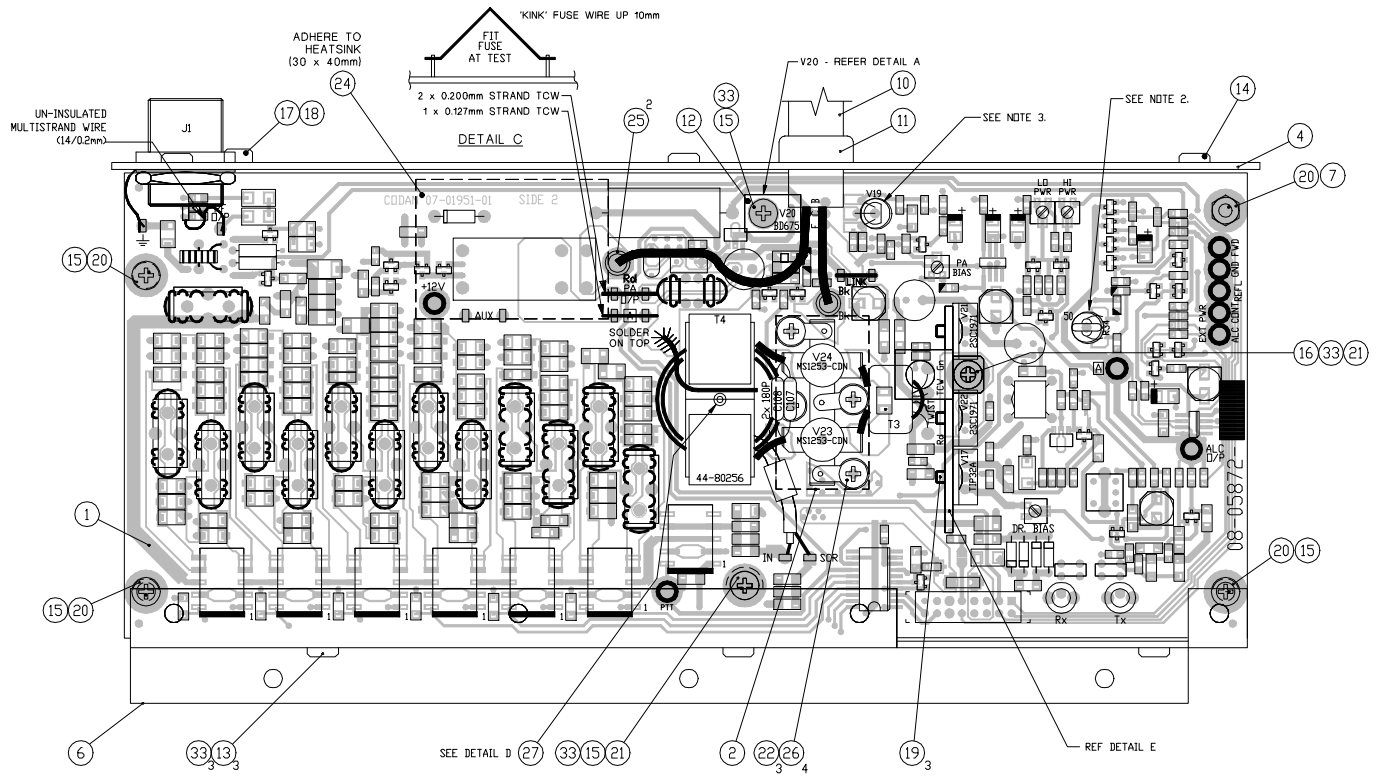

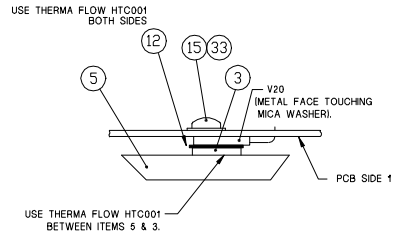

DETAIL A

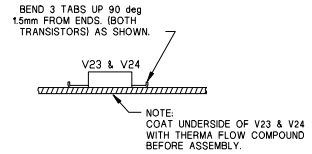

DETAIL B

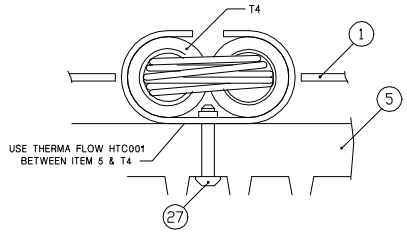

DETAIL D

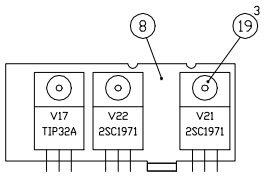

DETAIL E

SHEET	ASSEMBLY
1 & 2	08-05872-001
3 & 4	08-05872-002

PCB : 07-01951-01

NOTES:
1. ALL LINKS ARE 22SWG.
2. FIT HEATSHRINK SLEEVE(ITEM 28) X 8mm OVER R34, ENSURING THAT TOP IS COVERED. COAT WITH THERMA-FLOW COMPOUND, INSERT INTO HEATSINK(ITEM 5) AND SOLDER.
3. COAT V19 WITH THERMA-FLOW COMPOUND, INSERT INTO HEATSINK AND SOLDER.
4. ITEM 7, ITEM 13(6 OFF), ITEM 14(2 OFF), ITEM 15(3 OFF), ITEM 29, ITEM 32 & ITEM 33(11 OFF) ARE OFFSET DELIVERY AND FITTED AT FINAL ASSEMBLY (REFER 08-04961-XXX).

DIMENSIONS IN mm

ISSUE 2: REFER SHT 3 C/R 26841

FILE No. 08\05872B_2.DWG

CODAN

MATERIAL

FINISH

DRN	ILT	DATE 31-10-00	SCALE 2:1
CHKD	NJA	6-11-00	
APPD	SCS	8-11-00	

TOLERANCES UNLESS OTHERWISE STATED
2 PLACES DEC. ±0.26
1 PLACE DEC. ±0.5
0 PLACE DEC. ±1
ANGULAR ±2°

© CODAN PTY LTD, A.C.N. 007 590 605: 1997

TITLE
PA AND FILTER (INTERIM)
FINAL ASSEMBLY (30.0MHz)

A1 DRAWING/DOC NO. 08-05872

ISS 1 2

SHT. 4 OF 4